ISBN 0 9535039 7 6

Non-electronic Calculating Apparatus

An Illustrated Listing of 2900+ GB Patent Specifications 1731 - 1999

Prepared by

Bruce O.B. Williams

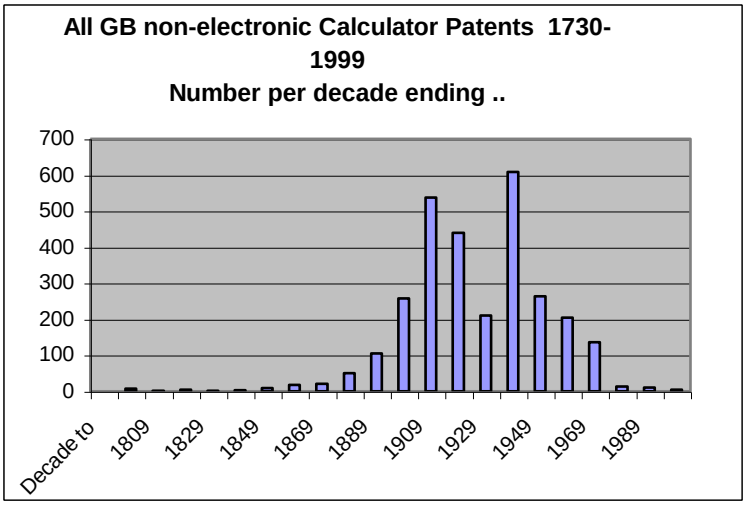

With drawings and texts from full Patents Pre-1850 & from Abridgements 1855 - 1919
Hyperlinks to full Patents from 1915

A PUBLICATION OF THE UKSRC

Non-electronic Calculating Apparatus

An Illustrated Listing of over 2900 GB Patent Specifications, 1730-1999

With Drawings and Texts from full Patents pre-1850 & from Abridgements 1855 to 1919

Bruce O. B. Williams

© 2004 Bruce O. B. Williams

All rights reserved. Reprints, photographs or any form of reproduction, microfilm and computer storage, translations of text and illustrations, in part or in whole, is expressly prohibited without prior permission

ISBN 0 9535039 7 6

Published by Colin Barnes in conjunction with the UK Slide Rule Circle;
189 Mildenhall Road
Fordham
Ely
Cambridgeshire CB7 5NW
England

CONTENTS

CONTENTS 3
Guide to Use 25
1. The README document 25
2 The Excel File GB CD Calc Patents XL 25
3 , The full Illustrated Word file *CalcPatsV3X* 26
4 An Excel Reader for those who do not have a full Excel. 26
Foreword by Peter M Hopp **Error! Bookmark not defined.**
INTRODUCTION **Error! Bookmark not defined.**
Full patents from 1919 on the web ..... **Error! Bookmark not defined.**
The GB Patent systems ..... **Error! Bookmark not defined.**
Coverage of this listing ..... **Error! Bookmark not defined.**
Introductory essay ..... **Error! Bookmark not defined.**
Sources at the British Library **Error! Bookmark not defined.**
1 Titles Chronologically arranged 1617-1852 ..... **Error! Bookmark not defined.**
2 The abridgments from 1855 ..... **Error! Bookmark not defined.**
Commentary **Error! Bookmark not defined.**
Early GB Calculating devices for which no patent has been identified. ..... **Error! Bookmark not defined.**
Statistical findings from this Listing ..... **Error! Bookmark not defined.**
Inventors, Patentees and Agents ..... **Error! Bookmark not defined.**
Inventor's country of residence ..... **Error! Bookmark not defined.**
Class of device used here ..... **Error! Bookmark not defined.**
Numbers of each Class per decade ending ..... **Error! Bookmark not defined.**
Numbers in each application area ..... **Error! Bookmark not defined.**
Application area ..... **Error! Bookmark not defined.**
Table of Calculating patents per Thousand Patents , by decade ..... **Error! Bookmark not defined.**
UGI's or USELESS GOOD IDEAS? ..... **Error! Bookmark not defined.**
Cheese Cutter ..... **Error! Bookmark not defined.**
No. 20 Dayton Cheese Cutter ..... **Error! Bookmark not defined.**
Homing pigeons ..... **Error! Bookmark not defined.**
Militaria ..... **Error! Bookmark not defined.**
Krupp 16588/1908 Trajectories of projectiles. ..... **Error! Bookmark not defined.**
Sterling £sd devices ..... **Error! Bookmark not defined.**
Academic / curatorial inventors - the great sources ..... **Error! Bookmark not defined.**
Acknowledgements ..... **Error! Bookmark not defined.**
Bibliography ..... **Error! Bookmark not defined.**
Using the Chronological List ..... **Error! Bookmark not defined.**
Notes on definitions and terminology ..... **Error! Bookmark not defined.**
LIST IN CHRONOLOGICAL ORDER 46
Extracts in ALPHABETICAL ORDER OF INVENTORS 141
Abbott P W H 15498/1906 Trig teaching device 141
Abdank Abakonowicz 5519/1882 Planimeter 142
Acrey C M 8368/1912 Multiplier for tax Gears 143
Acworth J J 3873/1901 Slide rule photo exposure 144
Adams W M 2379/1872 Solution of triangles 145
Adderator AB 18763/1913 Adder 146
Adderator AB 19089/1913 Adder 146
Addometer Corp 24412/1914 Adder 147
Agnew R F 22165/1913 Slide rule for cloth 147
Albers J J O F 27368/1907 treadle operated machine 148
Albree E C 18776/1907 Cards for workmen's wages 148

Allaun C 120985 of 1917 Tab calc. The Educated Monkey....150
Altena de Campos L C 4114/1817 Cosmometer for longitude at sea....152
American Arithmometer Co 12121/1888 ASMD....153
American Arithmometer Co 17126/1893 Adding....154
American Arithmometer Co 12730/1897 Printing mechanism....155
American Mechanical Cashier Co 8882/1903 Calculate change....156
Amsler J 2753/1855 Planimeter....157
Anderson F J 6095/1903 Long Scale slide rule....158
See [8] Anderson F J 9095/1903 Long Scale slide rule Full....158
Anderson F J 9095/1903 Long Scale slide rule Full....159
Anderson F J 22762/1903 Spiral slide rule....172
Angus G H 4228/1888 Abacus....173
Angus T C 135646 of 1918 Plane trig calc....174
Appleton L 1103/1868 Apparatus for calculating interest to the ¼ d....175
Appleyard R 136179 of 1916 Spiral slide rule for heights....176
Appleyard R 136180 of 1917 Plane trig calc for ranging....176
Appleyard R 136181of 1917 Slide rule for air speed....177
Appleyard R 136182 of 1917 Log calc. 177
Appleyard R 136183 of 1918 Plane trig calc. for torpedos....178
Armstrong E R 14143/1904 Surveying instrument....179
Arton S 117463 of 1917 Adder....180
Atkins R 2737/1803 Hydrometer, Chrono....181
Austin S B 21704/1910 Multiplier....182
Autokal Syndicate 136628 of 1918 Mult & divide prices....183
Auty J 4208/1883 Add punched cheques....184
Avery C H 14853/1912 Circ slide rule for price of wool....185
Babbage H P 10399/1894 Adder....186
Babini L 26890/1912 Key set adder....187
Bagshaw W 17962/1887 Indicator diagram....188
Bahmann G A 3757/1888 Adder....189
Bahmann G A 17035/1904 Tab Calc....190
Baines H M 25109/1903 Poly slide rule....191
Baker E 675/1893 Shore distance....192
Baldwin F S 14152/1913 ASMD....193
Baldwin F S 14153/1913 ASMD....194
Ball F 15616/1915 Tidal calculator....195
Bannehr, Dolton, Gilbert, Watson 15291/1913 Adder avoirdupois....196
Bamlet, Box & Williamson 22921/1911 Add & multiply....197
Banwell E 121009 of 1917 Tab calc for wages freight etc....198
Baranowski J J 11806/1847 Ready Reckoning machine, Tabular Calculator Full....199
Barbour E D 2437/1872 Calculating apparatus....201
Barlow W H 3506/1867 Calc apptus Quantities in railway cuttings, 2 discs,....202
Barnard H O 22630/1906 Solve triangles....203
Barnett D Agent for unknown foreigner 11441 /1846 stylus driven Tabular calculator Chrono....203
Barr, Bell & Bramston 5675/1915 Electric brush adder....204
Barr & Clarke 8259/1909 Multiplier, non-decimal units....205
Barr & Clarke 7014/1910 Multiplier....207
Barr & Stroud 5182/1912 Gunnery computing scales....209
Barr & Stroud 4651/1915 Gun sight correction Prop calc....210
Barr & Stroud 133974 of 1917 Gunnery calculator with gears....211
Barr, Bell & Beeton 25018/1910 Multiply with balls and compressed air....212
Barron & Harding 6050/1889 Steam engine indicator....214
Bartels J L 2368/1907 ruler with slide....214

Bathurst A A 128811 of 1918 Trig calc 215
Baum M 27413/1911 Small adder 216
Baxandall D 105371 of 1916 Spherical Trig 217
Bayldon & Armstrong 24761/1898 Navigation device 218
Beals E V 8916/1905 Area measure & print 219
Beaucourt E 17401/1912 Adder multi disk 220
Beaucourt H 2441/1881 Adder 221
Bec V-M 5855/1911 Add Subtract Circular stylus 222
Bechtolsheim Freiherr von 1217/1910 Add Subtract 223
Beck G 1274/1780 Surveying & calculating device abr txt 224
Beck G 1274/1780 Surveying & calculating device Part of full patent 225
Beehler W H 10916/1894 Re compass error 226
Beher O 13538/1890 Adding machine 227
Behr B C M 3402/1908 Chain adder 228
Belshaw R 3281/1896 Slide rule for horizontal cask 229
Berggren P 13800/1903 Adder with ratchet key entry 230
Bernovits V 5570/1912 Tab calc 231
Bevan H 1597/1858 Strip multiplier 232
Bevan H 2770/1 858 Calculating apparatus (Disc & rod arith multiplier) 232
Biane R 17479/1905 Bridge scorer 233
Biane & Lourau 24813/1910 Adder printer bridge scorer 234
Billeter & Bohnhorst 133682 of 1918 Logarithmic calculator 235
Billing N P 9070/1908 Adder 236
Blackshaw J E & Rogers G H 19474/1891 Adder Rings 237
Blaustein J 115029 of 1917 Adder Keyboard 238
Blum M 28308/1907 Adder printer 239
Bollee M 16677/1889 Mechanical Multiplier 240
Bollinger & Landry 27446/1907 Pin wheel machine 241
Bolton F 2177/1875 Pricing liquid flow 242
Boorman J A 13313/1887 Bevel wheel design 243
Borner F 2104/1902 Multiplication table 244
Bordt A 20596/1911 Adder printer 245
Bordwine J 2895/1864 Spherical trig 246
Bosanquet C J 6826/1894 Pocket slide rule 246
Boss-Gonzelmann J 17518/1913 Add columns 247
Bottone N 2361/1875 Adder £sd 248
Boucher A E M 4310/1876 Watch type slide rule 249
Bousfield G 12806/1886 Slide Rule for Timber Trade 251
Branczik K W 14142/1906 Circular slide rule with gears 252
Breguet 15951/1884 Mariner's compass adjuster 253
Bremer H 18538/1903 Tab calc 254
Brennand W & W E 1729/1893 Draw link motion curves 255
Breuer H 11575/1913 Tab calc 256
Briggs I 1828/1901 Portable adder 257
Bright G E 21646/1903 Calculate irregular areas 258
British Adding Machine Co 26763/1908 Adder 259
British Thomson Houston 8526/1912 Planimeter 261
Brooks F W 3853/1889 Coin operated Age calculator 262
Brooman R A 361/1857 Cask Gauge 263
Brotherhood R 6084/1889 Trigonometer 264
Brotherhood R 20088/1899 Trig problems 265
Brotherhood R 983/1892 Range finder 266
Brown J L 4817/1899 Measure length & fractions 267
Brown W 13498/1904 Multi slide rule for fabrics 268

Brown W F 12966/1915 Poly slide rule for metal sections 269
Browning G 21558/1894 Adder with tubes & balls 270
Bruckmann H 21446/1912 ASMD Pricing utilities 271
Bryan B W 5252/1901 Planimeter for varying scales 272
Buchan W P 1853/1879 Thickness of plates 273
Buchanan W S 115207 of 1917 Slide rule paper making 274
Buchanan W S 121066 of 1918 Slide rule for paper 275
Buchert A 11598/1912 Teach arithmetic Abacus like 275
Buckle E 2610/1912 Add subtract stylus 276
Bucknall W 528/1731 Chrono and abr astronomical device 277
Buell S A 27378/1898 Calc calendar on bands 278
Buerk R 26170/1907 Adder 279
Bundy W Le G 9990/1898 Adder Printer 280
Bundy Mfg Co 409/1903 Printing adder 281
Bunzel-Delton-Werk 23575/1913 Multiplier 282
Bunzel–Delton–Werk 24064/1913 Stepped barrel 283
Bunzel–Delton–Werk 24381/1913 Thomas type 284
Burkard A 2879/1874 Ready Reckoner 285
Burkitt F G 5115/1905 Repeat add multiplier 286
Burroughs 8261/1912 Add Avoirdupois weights 287
Burt E A P 4359/1887 Slide rule cubing timber 288
Burt E A P 12516/1909 Slide rule cubing timber 288
Burt E A P 3073/1909 Tabular calculator 289
Burt E A P 23620/1914 Measuring & Calculating Rule Tab calc for timber 290
Butterfield E A 13416/1898 Calculating time table 291
Caink T 9975/1903 Proportional scales 292
Callender's Cable 24944/1902 Adder 293
Callender's Cable 27683/1906 Slide rule for cable 294
Callenders' Cable 7269/1915 Slide rule for electric calcs 295
Canale J 1427/1881 a board for contents of cuttings etc. 296
Canale J 4218/1880 Multiplier to calc volumes 297
Carey S 13855/1894 Navigation at sea 297
Caron P J E 11928/1901 Slide rules in tool handles 298
Carter W C 13041/1885 Slide rule for boiler makers 299
Caws F 5513/1885 Ship design 299
Chambon C L 4131/1879 Days between dates 300
Champeix & Champeix 14589/1910 Tab calc 301
Charpantier J V 7976/1886 Tab Calc 302
CharpantierJ V 18541/1886 Tab calc interest 303
Charpentier--Page G 2119/1882 Circ Slide rule 304
Chateau Freres 101013 1915 Odhner type 305
Cheape J A 12025/1898 Device for photo exposure 306
Cheape J A 12972/1909 Add Subtract Endless band 307
Cheape J A 14901/1912 Adder for £sd 308
Cheesman H 6747/1888 Circ Tab calc for strength of ropes. 309
Chesneau J R 1300/1861 Tables on pen holder 310
Chesterman J 9214/1842 Tapes and box Chrono abr 311
Chew A C 117318 of 1917 Slide rule for trig 312
Chew A C 139340 of1919 Slide rule with rack and pinion 313
Chico P P S 8582/1884 ship stability 314
Childs C V 15821/1913 Slide rule for steelwork 315
Chow Ling Shang 12875/1900 Bones 316
Christie R A 112681 of 1917 Disk for artillery calcs 317

Church W 39 / 1858, Rules & machinery to manufacture them 318
Claassen H 5518/1900 Vacuum gauge for crystallisation 319
Clarke & Debenham 29574/1912 Tab Calc 320
Claud-Mantle J G 8984 /1886 apparatus for indicator diagram 321
Claudel P 755/1886 Uses similar triangles for trig. 322
Clifford C C 8542/1898 Adder printer 323
Cloud O E 27472/1903 Adder Printer 324
Clowes T 7635/1903 Tab calc circular 325
Cochran J E 18745/1909 Computing scale £sd 326
Cochran J E 24005/1910 Computing scale 327
Coddington & Livens 13759/1915 Wage calculator sheet 328
Colby C K 12664/1894 Speed calculator on watch face 329
Cole H L 28360/1911 Slide rule for locomotive effort 330
Coleridge G J D 14645/1896 Subtract £sd 331
Colles G 22508/1908 Conversion scales non-log 332
Collins N 18562/1902 Tab calc on card 333
Collins A G 186/1906 Tab calc slide card 334
Computing Scale Co 9870/1897 Computing scale 335
Connecticut Computing Machine Co 23393/1908 Print add subtract 336
Connolly & Osborne 5168/1904 Planimeter for hides 337
Connolly & Osborne 2161/1908 Planimeter for hides 338
Conti J T F 15143/1912 Conversion scales £sd 339
Cooper, Bale et al 3132/1909 Abacus for teaching 340
Coradi G 1065/1907 Planimeter 341
Cordingley W G 15435/1907 Small £sd adder 342
Cordt H 11650/1909 Multiplier by plates and wheels 343
Cordt H 16261/1910 ASMD Key board 345
Cossor & Flory 930/1908 Stylus adder 346
Cotterell M B 19824/1898 Slide rule for batteries 347
Coulon G L C 2274/1877 Computing scale 348
Coutinho A J R 10781/1884 Adder rods and wheels 349
Cox E L 15101/1910 Tab calc in loose leaf book 350
Crabtree W S 12934/1911 Computing scales for gear wheels 351
Craig D I 16882/1890 Adder 352
Crawford E N 117982 of 1917 Tab calc for length of material 353
Craufurd J J W 10314/1890 Circular slide rule for railway cuttings and curve calculation. 354
Cressey T S 1146/1858 Wages tab calc 355
Cromey J H 11471/1905 Tab calc for butchers 356
Crompton & Gallagher 128878 of 1919 Slide rule for steam 357
Crosley W 15959/1902 Slide rule chart on cone 358
Crutchley C F 112530 of 1917 Scale for tuning musical instruments 359
Cunq L 1647/1858 Calculating apparatus circular slide rule for liquid flow rates 360
Cuttriss S W 8285/1889 Circular slide rule 361
Daemen Schmid H 15964/1908 Broken scale slide rule on cylinder 362
Daemen Schmid H 20301/1909 Thomas type 363
Daniel LM & RM 13100/1909 Adder on typewriter 364
Darling J 4592/1879 Calendar on strips 366
Darling J 5113/1879 Circular adder 367
Darnley & Richards 167699 of 1921 Tabular calculator 368
Davis & Son 101051 of 1916 Slide rule construction 369
Davis & Son 115981 of 1917 Slide rule construction 369
Day A J 11767/1899 Local time disks 370
Dean H 90/1866 Plotting & computing scale 371
Dees M A 4772/1902 Computing weighing scale 372

Dennis A S 15709/1900 Adder printer 373
Denny & Gray 6640/1895 Ship's metacentre 375
Des Jardins B M 11414/1900 Calculating type writer 376
Dicas J 1259/1780 Hydrometer Chrono 378
Dicker S G S 830/1914 Statistical machine 379
Dickinson H & M 12088/12088A /1905 Adders 380
Diestelhorst T 19180/1912 Stats Punch card 382
Dodson A F 112719 of 1917 Tab calc on sheet for prices 384
Dohm W 5142/1900 Sections of Beams 385
Donlevy J P L 9725/1903 Adder 386
Doscher T 12314/1907 Abacus 387
Douglas & Appleyard 134558 of 1916 Range finder 388
Drake W A 25180/1898 Tab calc 389
Draper & Robertson 14364/1904 Multiply weights & values 390
Drennan J 28452/1907 Stepped drum adder 392
Dreyfus & Levy 5779/1907 Disk adder 393
Dreyfus & Levy 621/1909 Adder £sd 394
Drha F 11194/1889 tab calc for interest 396
Dring & Fage 25466/1912 Slide rule for timber 397
Dring & Fage 25467/1912 Tab calc for timber 398
Duchamp P 2436/1877 Add Subtract card scorer 399
Duckham Sir A M 110984 of 1916 Proportional calculator 400
Dudgeon H A 23858/1901 Irregular areas 401
Dudley G W 3702/1896 Adder typewriter 402
Dufresne Z 21623/1893 Tab calc cylinders 404
Dumaresq J S 17719/1904 Gunnery device 405
Duncan J E 1410/1898 Computing scale double cylinder 406
Dunham C M 8648/1888 Tab calc rolls 407
Dunlop H C 23886/1901 Slide rule design 408
Dunlop R 124/1862 Tab calc 409
Dunn & Harrison 9118/1899 Computing scale 410
Duplex Adding Machine Co 23890/1907 Adder Printer 411
Durand A N 3175/1880 ASMD 412
Duschanek K 3828/1883 Calculating apparatus 413
Eagles J 3937/1895 Helical Slide Rule. 414
Eastwood W 120980 of 1917 Slide rule pedometer volumeter barometer 415
Eberhardt H 3363/1904 Adder printer 416
Eberhardt H 10264/1904 Adder addiator type 417
Eckelmann M 12084/1906 Disk adder 418
Eckelmann M 14250/1907 Disk adder 419
Edmonds H H 12714/1905 Trig problems 421
Edmondson J 16/1883 Calculating apparatus 422
Edwards R W K 16042/1903 Calc area 423
Ehrich P A 21915/1913 Abacus for teaching 424
Eicheus F W 518/1879 Navigation 425
Ellis H 28253/1908 Adding typewriter 426
Elliott-Fisher 5206/1907 Adder on type writer £ sd 427
Elsdon C H 11034/1898 Calendar tab calc discs 428
Empire Cash Register & Collins N 10904/1900 Cash Register 429
Enberg J C 19145/1914 Machine multiply by partial products 430
Enberg J C 19146/1914 Adder cash register 433
English T 12596/1905 Calc by parallel lines 434
Ensign E S 22824/1904 Multiplier 435

Esnouf A 20424/1913 slide rule for steel work design....436
Esser H 10512/1894 Multiply & Divide....437
Essex E H 6278/1908 Poly slide rule for flow rates....438
Essmann A 15100/1915 A S M D Print....439
Evans W J 24662/1910 Adder days between dates, disks....440
Evans-Cross G W 10459/1906 Tab calc....441
Ewington H 3566/1812 Navigator's Sector....442
Faber 10230/1903 slide rule log of numbers scale....443
Faber A W 10753/1913 Slide rule frame....444
Fairchild C 2130 /1902 cash register....445
Fairchild C 20201/1902 Adder....446
Falletti E 6782/1893 Surveying....447
Fallon C J 1986/1906 Abacus....448
Farini P 5088/1899 Drawing square....449
Farmar F C 19288& 9/1899 Cask slide rule & dip rod....449
Farmar F C 8309/1901 Slide rule for alcohol....450
Farmar FC 7364/1908 rule for ullaging etc....452
Farmar F C 12717/1912 Discount slide rule with cylinder....453
Fassbender F 14200/1898 Mech disc calendar with lunar phases....454
Fauvel & Collins 23241/1897 Adder £sd....455
Fearn & Martyn 28461/1913 Abacus....456
Fellows H W 7421/1908 Device for gear design....457
Felt & Tarrant 19964/1890 The Comptometer....458
Felt D E & Tarrant R 20990/1896 ASMD, printing comptometer....459
Felt D E 5387/1909 Adder for £sd....461
Felt D E 9509/1909 Tab calc for £sd....462
Felt D E 25766/1909 Tab calc....463
Felt D E 1622/1910 Adder....464
Fergusson J C 124245 of 1918 Circ slide rule trig....465
Fincato P 5001/1912 Add, multiply by repetition....466
Findlay G 14406/1905 Disk adder bridge scorer....467
Flory & Flory 13447/1907 Small adder for £sd....468
Fontaine-Moreau, P A, Comte 3327/1857 Local times....469
Fearnley J B 863/1881 spiral slide rule....470
Forster A 23256/1900 Gravet type slide rule for steam engines....471
Fortin J E 15961/1895 Planimeter for leather....472
Fossa-Mancini C 1489/1899 Adding machine....473
Fowler G B 13012/1890 Adder....474
Picture....474
Fowler W H 5528/1910 Circular slide rule....475
Fowler W H & H 20416/1912 Watch type slide rule....476
Fowler W H & H 3638/1914 Circular slide rule....477
Fowler W H & H 15990/1914 Circular slide rule....478
Frampton E 14358/1892 Spiral slide rule....479
Franke A 9997/1897 Adder printer £sd....480
Franke A 10170/1897 Adder printer £sd....481
Fregoso T 23275/1902 Solve triangles....482
French & Frederick 11464/1910 Spherical trig....483
Frere R T 21832/1903 Sun dial....484
Freschl A 28128/1908 Planimeter....485
Frichette L 16592/1903 Scales for roof rafters....486
Froom G R 692/1899 Abacus for sterling....487
Frost L L 1689/1903 Tally....488

Frydmane J 10310/1900 Adder printer....489
Frydmane & Chambon 1109/1904 cash register and 1110/1904....490
Fuller G 1044/1878 Cylinder Slide Rule....491
Fyffe W 4783/1899 Tab wage calculator....493
Garcia M J 26507/1905 Solve spher triangles....494
Garner D A 10382/1891 Adder....495
Gancher A I 17161/1907 Chain adder for £sd The "Golden Gem" 496
Garrigues P 17008/1902 Gauge to measure heaps of stones 498
Gateuil J N 3258/1872 Add Multiply 499
Geny E 2003/1880 Adder....500
Gillman G 23024/1894 Diagram for stadia measurements....501
Ginet J H 25156/1905 motorised adder....502
Giot H L V D 112012 of 1916 Spherical trig.....504
Giuliani V 20467/1908 ASMD....505
Glaser W H 487/1903 Slide rule for textiles....506
Glaser W H 109330/1916 Slide rule with vernier....507
Gleason A 10230/1892 Local time....508
Gledhill A H 20725/1907 Transfer mechanism....509
Glendinning A 18749/1896 Calendar Day of week....510
Glover T R 10814/1891 Multiply by strips....511
Glover T R 15113/1893 Multiplying apparatus....512
Goldberg H E 15775-6/1902 Adder typewriter....513
Goldfarb & Drusin 20028/1908 Chain adder....514
Golding H A 8196/1907 Slide rule for steam....514
Goldman H 10237/1899 Stylus, chain The Arithmometer....515
Gomila S De 5483/1905 Multiplier....516
Goldman H 4382/1908 Chain adder....517
Goldman H 17969/1908 Chain adder....518
Goodacre S 3231/1883 Local time....519
Goodman J 6087/1890Planimeter....520
Goodman J 407/1891 Planimeter....521
Goodwin H 9585/1897 Computing scales for printer's work....522
Goold W T 16807/1892 Slide rule with second slide....523
Gorin F P 3764/1907 Adder....524
Goudie W J 15527/1899 Slide rule for steam engines....525
Graham R W & France J J 10853/1904 Tab calc Date or Interest....526
Graham T 112822 of 1917 Ship stability....527
Grant H C J 22117/1913 Plotting board....528
Grantham A M 20218/1899 Gauge & Tab calc for paper sheets....529
Grard H J B 3501/1915 Area of skins....530
Gray H 22445/1910 Multiply Napier's bones....531
Gray J 17115/1907 Solve problems in arithmetic & Algebra analogue....532
Grenon C 13548/1911 ASMD Money....533
Grimme Natalis 2318/1894 Receipts checking & Recording....534
Grimme Natalis 24596/1909 Pin wheel....535
Gruner & Jalley 5755/1906 Tab calc....536
Guthrie J 15062/1890 Adding board....537
Guy F E 3551/1909 Multiply & divide Thomas type....538
Haack P 13094/1900 ASMD....539
Hadrich, Lamertz & Dreckmann 18296/1903 Adder....541
Hafen J 21938/1896 Calc calendar....542
Hagemann H 5893/1887 System converter using screws....543
Hagey R J 16075/1900 Slide rule photo exposure....544
Haggarty J R 8644/1904 Calendar Date calculator....545

Hagyi-Ristic & Duffek 1679/1902 Cubes on shafts 546
Hall C G 6748/1906 Single disk adder 547
Hall D & Kay J H 25715/1899 Temperature correction for hygrometers 548
Halladay L P 10287/1899 Computing scale 549
Halsey E 13298/1885 ASMD, taxes, Tabular device 550
Hammond R W 2133/1910 Helical slide rule 551
Hanks F A 8030/1915 3-D triplane plotter 552
Hanmer H H 1423/1894 Tab calc for cotton prices 553
Harrison N 1884/1887 Navigation instrument 554
Harris A W 25015/1908 Pneumatic or electrical calculator 555
Hart H C 1479/1891 Multiply prices, low limits 556
Hartmann & Hausler 15939/1902 Adder 557
Harvey C J 12793/1915 Prop calc for percentages 558
Hasselberger F 28566/1908 Abacus 559
Hawley G H T 1158/1883 Calendar calc 560
Hawtrey J P 4258/1877 Stylus driven band adder 561
Hawtrey J P 3823/1878 Adder flanged rings 562
Hayes H 4071/1889 Tab Calc Cylinder multiply, wages 563
Hearn M 18545/1892 Adding machine 564
Heaton G 258/1881 Adder 565
Heinitz W 336/1900 Adder Printer 566
Heinitz W 24140/1902 Adder 567
Heinitz W R 30338/1909 Stylus adder 568
Hemm H C C Von 12935/1910 Log scales on one sheet 569
Hemmi J 1076562 of 1917 Slide rule in bamboo 570
Henderson & Richards 3690/1905 Multiply slides 571
Hensley H A 7714/1904 Adder, Interest 572
Hertzberg et al 10959/1905 compounded readings 573
Heppenstall & Mear 1168995 of 1965 Circular slide rule “Rotoscale” 574
Hett C L 6680/1891 Slide rule for belting 575
Hiett De K J T 9872/1897 A M Print 576
Hickling W E 21996/1896 Computing scale disc 577
Higgins L R 20323/1892 Converting scales 578
Hill E 16900/1909 Tidal navigation 579
Hill H W 129372 of 1917 Gunnery calculator 580
Hill T 1763/1876 Solve spherical trig 581
Hillhouse P A 11074/1895 Planimeter 582
Hills W D 16198/1911 Circ slide rule Currency 583
Hillyer E C 22721/1907 Disk adder Bridge scorer 584
Hinchman G N 24489/1907 Adder lister for £sd 585
Hincks H T 19061/1904 Circular slide rule for Ohm’s Law or pipes 586
Hines J 10729/1905 Tab Calc 587
Hines J 26518/1908 Tab calc 589
Hines J 12963/1910 Tab calc 590
Hoch A 14945/1899 Adder printer 591
Hoch & Wendling 7289/1902 Adder typewriter 592
Hoch & Wendling 7290/1902 Adder printer 593
Holden E C 3199/1908 Slide rule for yarn production 594
Hollerith H 327/1889 Punched card 595
Hollerith H 8101/1894 Punched card for statistics 596
Hollerith H 17738/1894 Punched cards 597
Hollerith H 10502/1901 Totals by category Punch card 598
Hollerith H 19372/1901 Statistics Punched card 600
Hollerith H 27072/1904 Statistics 602
Hollerith H 4893/1906 Statistics 603

Hollerith H 27067/1907 Statistics 604
Hollerith H 20317/1909 Statistics 605
Hollerith H 15475/1911 Statistics Punch card 606
Hollerith H 16432/1911 Print punch cards 608
Holmes & Hodge 30173/1904 To design rafters 609
Holloway W M 21049/1913 Adder 610
Holophane Ltd & Berson T 107228 of 1916 Circ slide rule for lighting 611
Holt P W M 19047/1895 Solve right triangle 612
Honeysett & Stanley 4803/1890 Slide rule for flow in pipes 613
Hook E T 19638/1914 Trig calc for navigation 614
Hopkins H 18058/1907 Add Multiply List 615
Hopkins W W 6193/1894 Add Subtract 616
Hopkins W W 20133/1901 Adder 618
Horsburgh E M 11023/1904 Polar plotting chart 619
Horsfall A E 22829/1904 Scale and clinometer 620
Horvath A 27261/1898 M D Napier's bones 621
Hoskins B 16997/1907 Adder printer 622
Howieson J T & Spiekerman F 18853/1902 Adder typewriter 623
Howieson J T 28058/1910 Adder, motorised, on typewriter 624
Howgrave-Graham R P 17309/1915 Trig calc 625
Hudson E & Bedell B H 23872/1910 Tabular calculator 626
Hudson J F 18341/1914 Plane trig, analogue, navigation 627
Huettel A G 24307/1903 Pocket cash register 628
Huizer S L 13492/1892 Adder 629
Hulls J & Bradford W 686/1753Counterfeit Coin-Detector and Sliding Rule. Chrono 630
Hultman & Johanson 3745/1902 Adder 631
Human E 18237/1892 Sheets for plotting 633
Hunt J 19018/1900 Calendar discs 634
Hunter & Edge 6064/1909 Slide rule for weights 635
Hurter F & Driffield V C 5545/1888 Slide rule photo exposure 636
Huskisson A R 22029/1904 Ruler and slide rule 637
Illgen P 3744/1888 Adder 638
Illgen P C & Kursten P E 18846/1888 Checking counters 639
Ingham J & Hinchcliffe G 200/1860 Slide rule for weights of warps 640
Inglis H R G 1533/1912 Multi slide rule 641
Ionides A G 9446/1911 Circ slide rule for engines 642
Jackson Bros 109107 of 1916 Cardboard slide rule 643
Jackson T 129533 of 1918 Slide rule construction 644
Jackson T 129600 of 1919 Slide rule of sheet metal 644
Jacolin P 8883/1900 Measure and slide rule 645
Jahn A 12613/1911 Thomas type 646
Jahnz E 19954/1909 Continued multiplication 647
Jayet J 11928/1847 Calculating machine Full 648
Jeffree F H 9704/1912 Tab calc for A S M D 668
Jeffry C S 24239/1914 Slide rule for steam 669
Jelfs G W 15073/1908 Teaching fractions 671
Jenks G F 5489/1909 Teaching frame 672
Jennings R L 23627/1900 Circular slide rule for timber trade 673
Jerand D 22636/1908 Abacus 674
Jewsbury J 1127/1866 Solar position 675
Jobson G 19970/1898 Very small tab calc 676
Johanson A M & Hultman I 11975/1905 Multiplier 677
Johansen G E 27114/1911 Add Subtract 678

Johnsen S 23885/1906 Pocket cash register 679
Johnstone T 13747/1914 Plane trig calc 680
Johnstone G 11173/1894 Metacentric height 681
Jones E T 2083/1796 Detecting errors in accounts 682
Jones J G 1426/1854 Apparatus for teaching addition, using sliding bars 683
Jones E T 2083/1796 Detecting errors in accounts. Chrono 684
Joy D G 2990/1906 Printer adder 688
Jowett & Squire 122435 of 1917 Drums carrying printers 689
Katz M 25755/1907 Tab calc for interest 690
Karasek K & Aumund J 26464/1905 Adder for £sd 691
Keighley C W 21842/1910 Add print 692
Kellett T W 582/1879 Portable add printer 693
Kelling K 19870/1903 Multiply two key boards 694
Kelt A 8720/1888 World time cylinder 695
Kelway C E 3539/1883 Shore distance 696
Kennedy J F 122087 of 1918 Gunnery calc 697
Kerr D S 10854 &10855/1912 A S and dates 698
Kettlitz C 1429/1909 Adder 700
Keuffel W 1433/1905 Multiplier Thomas type 701
Keuffel & Esser 16939/1891 Slide rule 702
Kidd G W 111121 of 1916 Proportional for ship's log 703
Kimpton T C 2882/1863 Tabular device 704
King, Otis 207762 of 1922 Helical slide rule 707
Kirby E B 1979/1898 Keyboard 708
Kirby E B 1980/1898 Keyboard 710
Kirby E B 3541/1900 Keyboard mechanism 711
Kirby S R 14207/1898 Great circle navigator 713
Kjellstrom J 5060/1894 Tape measure weight calculator animal 714
Kleeberg P 12963/1913 Tab calc, Roller 715
Kluge A 10985/1902 Adder 716
Koechlin A 835/1896 World time discs 717
Knecht B 23304/1912 M & D 718
Koenigsberger K 4724/1878 ASMD 719
Krause R 7571/1902 Slide rule & nonius 720
Kreutzfeldt R T 17111/1907 Calc Beams, girders etc 721
Krog F A 2064/1914 Tab calc on bands for wages 722
Kruger G 13084/1910 Abacus 723
Krupp AG 15615/1913 Artillery calc 724
Kun & Halphen 19101/1904 Adder printer 725
Kuttner W 621/1895 Mult. Machine 726
Labofish C S 1736/1901 Adder on type writer 727
Labrousse C D 1470/1867 Adder 728
Labrousse C D 3117/1867 Adder 729
Lacoste A L 17647/1895 Solve trig problems 730
Lafond G 2195/1899 Adder 731
Landing L M 22951/1900 Solve interest & Dates 732
Lane D 476/1889 Indicator diagrams etc 733
Lane M E 15899/1908 Simple adder 734
Lange & Moe 17201/1903 Key adder 735
Lange, Lange & Moe 27246/1908 Key adder 736
Langhorne J T 20562/1901 Columnar adding on type writer 738
Lanzirotti A G 1703/1873 Squaring the circle 740
Layton C E & E J 3307/1892 Adder disc type 741

Layton E J 12032/1909 Thomas type machine....742
Leder E 7018/1907 Multiplier....743
Leder E 2706/1908 Series of logs on sheet on two drums....744
Leder E 22620/1908 Log apparatus....746
Lee & Bottomley 11030/1914 Slide rule for toothed wheel design....748
Lefevre H 1665/1871 Slide Rule....749
Leguin E 1753/1790 Longitude at sea by the lunar method, abr and full d....750
Lemaignen R B A 15094 /1908 Drum adder....754
Lemaignen R B A 15095/1908 Adder variable units....755
Lenthall C B 2451/1910 Tidal height calculator....757
Leumann R 21025/1904 Multiply by repeated addition....758
Levi M 14635/1898 Computing scale length, area....759
Levin J L 6717/1906 Key set adder....760
Lewthwaite J 11812/1847 Numbering machine Chrono....761
Liegrist M 1121/1857 circular adder for measurement of timber....768
Lilly W E 28603/1912 Spiral slide rule....769
Lilly W E 23968/1914 Cylindrical slide rule....770
Lindholm P T 7974/1886 Adding machine....771
Linzel C 12289/1899 Bending moments of girders....772
Lippincott A C 22193/1896 Planimeter for indicator diagrams....773
Little E de L 17175/1891 Convert quantities....774
Lock, Pollen & Barr 6838/1902 Solve triangles....775
Longacre M R 11297/1889 Cash register....777
Longini H E 23804/1905 Adder....778
Lorens C 11807/1887 Multiplying slides or cylinders....779
Lord L 22210/1892 Textile circular slide rule. Full....780
Lord E & W 7091 /1903 Circular textile calculator....787
Lotterhand J C 355/1903 Adder....789
Lotterhand J C 17375/1905 Adder for Underwood typewtiter....791
Lovering J G 17514/1892 Card for survey or navigation....792
Low D A 6049/1903 Slide rule wood & celluloid....793
Lowdon A H 16890/1902 Computing scale for screw propeller....794
Ludeke J E F 2892/1873 Proportional compasses....795
Lundberg G 21210/1892 Computing scale....796
Lutz L 17645/1906 Adder....797
Mace J 12091/1913 Sph trig....798
Mackay D 23385/1909 Tab calc for ship loading....799
Mackenzie K D 121677 of 1918 Tab calc for logarithms....800
Maclaren Cheese Cutting Machine Co 24516/1907 Cheese cutter....801
MacMaster P 1787/1904 Time slide rule not log....801
Magne F L 2484/1903 ASMD....802
Mallmann J 5322/1900 Adder....803
Mallmann J 15444/1901 Adder printer....804
Mallmann J 27874/1904 Adder....805
Manners C 16846/1892 Log scales on tape measure....806
Manson J L 114321 of 1917 Slide rule for metal springs....807
March L R 22698/1899 Adds columns....808
Marcet W 2820/1879 Adder uses balls....809
Marion et Cie 133629 of 1919 Tab calc for trig 810
Marks A S 14180/1911 Missile tracker....811
Marshall H 1481/1897 Adder for type writer....812
Marshall R 23981/1908 Circ slide rule for furnace charge....813
Marston F 9235/1842 Apparatus for calculations Chrono abr....814

Martin A J 108197 of 1916 Slide rule scales for wireless telegraphy 815
Martin C F 7905/1889 Length & slide rule 816
Martin J H 8976/1904 Adder....817
Martin W H 135671 of 1918 Poly slide rule for steel sections....818
Martiny & Co 2848/1874 Multiply tab calc 819
Maschinenfabrik Moenus AG 14863/1907 Area measure....820
Maschinenfabrik Moenus AG 18752/1913 Area of hides 821
Maschinenfabrik Moenus AG 2185/1914 Area of hides 822
Masera S 13957/1902 Slide rule scale on endless band 823
Maskelyne J N 76/1890 Cash register 824
Mason J H 21832/1914 Adder concentric circles....826
Matthews S & Williams S J A 1083/1907 Adder to check codes 827
Matierie M 831/1885 Log scale on tape measure....828
Matsson E E 7346/1891 Add, multiply,coaxial cylinders 829
Maurand A B D 826/1863 Tab calc on many discs....830
Maurice J 1392/1863 Scales and tables on a sheath on a roller ruler 831
Mason J W 9223/1889 Local times 832
Mastaglio M 28252/1908 ASMD....833
Mather J C 5158/1915 Lazy tongs calc 835
Matjeka O R 19506/1912 Tab Calc....836
Mavitta W 9428/1907 Computing scales, slide rule....837
Maxfield J 10987/1887 Ready Reckoner 838
Maybaum L 17366/1879 A S M....839
Maybaum L 10187/1903 Adder typewriter 840
Mayer M 11566/1884 Adder....841
Mayer M 629/1888 Adder....842
McCaskey Electric Calc Co 9563/1911 ASMD Print 843
McCombie T G F 22584/1904 Chart rule & scale for nav. 844
McIndoe J 13796/1914 Tab calc for interest 845
McLean D W 21658/1910 Adder, game scorer....846
McCleary M 17528/1905 Adder 847
McNary W H 1988/1870 Counter for flowmeter etc.....848
McPherson J A 24616/1896 Slide rule for water flow. 849
Mees A B 5963/1898 Computing scale....851
Meilicke C A 16192/1908 Tab calc for interest 852
Meilicke C A 16201/1908 Tab calc for interest 853
Meilicke C A 16212/1908 Tab calc for interest 854
Meilicke C A 7109/1909 Tab Calc for interest 855
Meire G H 6227/1888 Slide rule for carcase weight 856
Meire GH 11493/1890 Slide Rule Index/Cursor....857
Meixell H J 13816/1888 tab calc date indicator for interest....858
Merrick H L 5286/1908 Volume on conveyor belt 859
Meyer G 3062/1892 Interest calc tabular 861
Mez G 16444/1913Stylus adder 862
Michelson M 14698/1889 Deviation of compasses....863
Milne G 12787/1898 Calendar calculator....864
Mitchell A 8428/1905 Cheap circular adder 865
Mohlenbruck H 4010/1904 Circular slide rule for cutting wheels 866
Montforts A 20507/1896 Counter adder....867
Montessori M 17890/1913 Abacus to teach writing numerals 868
Moore F C 8217/1888 Adder 869
Moore J 14105/1852 Sph trig....871
Morin A M 5269/1910 Measure area of hides....872

Morin Boyelle - G 108460 of 1916 Slide rule for hardness of metals....873
Morse H N 21893/1904 Stylus adder....874
Moynihan E J 9409/1901 Adder for £sd....875
Mudd T 10311/1888 Watch slide rule....876
Mugnier F 12021/1904 ASMD....877
Muirhead & Edgar 13199/1900 Location by X-Rays....878
Muller A 14330/1903 M D....879
Muller A & Zeising O 3135/1904 Arithmometer....880
Muller W 5674/1828 Teaching astronomy etc....881
Muntz W E 9227/1902 English to metric....882
Muschke A 18388/1907 Directional photo exposure....883
Myers D 9068/1897 Computing spring balance....884
Nahlik G 26800/1906 Adder....885
Naish R 12347/1897 Instrument for percentages....886
National Addograph Co 9811/1900 Type writing computing machine....887
NCR 9369/1890 Cash register....889
NCR 15270/1907 Price computing apparatus....890
NCR 14052/1914 Adder printer....892
National Computing Scale Co 10622/1900 Computing Scale....895
Naville R L 7472/1905 Ready reckoner bridge scorer....896
Negretti & Zambra 1558/1912 Spherical trig device....897
Nelson J 20681/1890 Adding Sterling, 3 circles....898
Newton A V as agent 1236/1855 Calculating apparatus circular adder....899
Newton & Michell 474/1908 Check cipher apparatus....900
Newton W E As agent 645/1858 Keyboard Adder....901
Nezeraux P 1272/1875 Tab calc price by weight etc....902
Nicholls E C 17368/1912 Adder on type writer....903
Nicholls H G 2618/1904 Navigation calc....904
Nichols W K 6220/1894 Adder....905
Nicolas F 21284/1908 Tab calc....906
Nicole P 112416 of 1916 Proportional calculator....907
Niebuhr H 6102/1907 Integrating mechanism....908
Nimmo A 2451/1883 Calculating callipers....909
Niven G 25073/1893 stylus adder....910
Nolan J P 1566/1869 Range finder with calc scales....911
Norman H 26162/1912 Tab & Log calc for box making....912
Norris T 10583/1895 Circular slide rule....913
Numerograph Mfg Co 10070/1900 Adder printer....914
Oakes & Jackson 12966/1892 Adder....915
O'Brien & Browning 3761/1899 Adding with Balls....916
O'Connor C M M 29043/1911 ASMD Disks....917
Odell & Doanst 8034/1915 Punch card for wages....919
Odhner W 13700/1890 Arithmometer....920
Oelschlager W 11029/1909 Circ slide rule....921
Oginaga J J 2457/1882 Position of vessel at sea....922
Oliver N 351/1893 Astronomy....923
Ommundsen H 461/1912 Adder Bridge scorer....924
Original Odhner 138097 of1919 Logarithmic calculator for P V T of gases....925
Osmonson O A 17317/1905 Solve triangles....926
Oswald R F 22028/1897 Computing scales, sector....927
Owens J S 16256/1911 Smoke measurer & slide rule....928
Pailthorpe H N 6439/1909 Adder Age calculator....929
Pallweber J 11300/1904 Adder, noiseless....930

Pallweber J 29477/1904 Small adder 931
Pantsar K 4011/1901 Counting & adding £ s d 932
Parker W J A & J 5489/1894 Gauge with log scale for depth of hole 933
Patent Development Co 395/1907 Tab Calc Rolls 934
Payen L 8893/1908 Thomas type 935
Payne A E H 3675/1899 Tab calc on discs 936
Peard O L 23363/1904 Slide rule for steam 937
Peabody Leather Mach Co 110364/1909 Area of hides 938
Peck W 12614/1913 Sph trig 939
Peichl J 5045/1879 Mean of two compass readings 940
Penrose F C 1525/1876 Solve spherical triangles 941
Perks C 10465/1885 Navigation device 942
Perkins O J 1584/1879 Days between dates 943
Perry J 23236/1901 Slide rule Log Log 944
Petersson A 1246/1870 Adder 946
Pheils I F 548/1900 Local times 947
Phillips B H 9769/1893 Adder, key driven 948
Phillips W H 8515/1894 Photo exposure slide rule 949
Pickworth C N 2166/1895 Slide rule for textiles 950
Piggott W P 10625/1845 Instrument manufacture Chrono and abr 951
Pierce G P 11995/1902 Circular adder 952
Pike W H 3259/1903 Adder Printer 953
Pike W H 14979/1904 Adder £sd on type writer 954
Pike Adding Machine Co. 7015/1905 Adder 955
Piscicelli R T 10148/1912 Motorised pin wheel 956
Pivoda F 25313/1911 Circ slide rule for interest 957
Pivoda F 25314/1911 Micrometer attachment for slide rule 959
Pivoda F 1782/1914 Days between dates, Add subtract discs 960
Plechawski E 139/1890 Universal time indicator 961
Pletnik L 9501/1910 Mult Tab calc cylinders 962
Plumb F 763/1893 Lace test calculator 963
Pollen & Isherwood 13082/1906 Trig calc for ships 964
Pollen & Isherwood 14305/1906 Ship target 965
Pollen & Isherwood 1562/1912 Artillery slide rule 966
Poliakoff J 18358/1900 Re photographic exposure 967
Poor C L 123989/1918 Circ slide rule astronomic 968
Porter H 334/1878 Wage calculator using cylindrical tables 969
Porter H 334/1878 Tabular calculator cylinder Full 970
Postans A J 24868/1902 Adder 972
Postans A J 12057& 12058/1908 Add print 974
Pothig & Renner 29377/1906 Multiplier Thomas type 975
Pottin H 3313/1883 Add print register 976
Powers Accounting Machine Co 26896/1913 Punch card 978
Powers Accounting Machine Co 22359/1914 Statistical machine 980
Powers & Waterbury 7800/1915 Test punch cards 981
Powles H H P 10278/1899 Calculating calliper gauge 982
Poynter J B 1285/1891 Percentages 983
Prinsep D G 13915/1892 Slide rule for range finding 984
Printz O A K 112455 of 1916 Adder 985
Proescholdt M 15289/1910 Tab calc 986
Proell R 2516/1901 Computing scales 987
Prosser H R 27358/11907 Helical Slide rule 988
Pryce-Brown G G 16090/1894 Indicator diagram 989

Pugh E O C 21935/1903 Trig device....990
Pugh J V 3685/1907 Broken scale slide rule....991
Pullen M & W 1948/1874 Calculating apparatus....992
Rafferty W C 17110/1894 Artillery range finder....993
Raggett J J 4120/1884 Adding machine....994
Raggett J J 6074/1884 Adding device....995
Raggett J J 8689/1884 Modified 4120/1884, Adding machine, 9-key....996
Ralston S B 11561/1910 Metacentric height....997
Ralston S B 11283/1913 Metacentric calculator....998
Ram G 2149/1884 Poly slide rule....999
Ramage A G 4982/1896 Ship stability....1000
Rauchwetter F 17958/1910 Direct multiplier....1001
Raymond-Barker E 12434/1903 Graphical device....1002
Read W J 20708/1907 Circular slide rule for conversion.....1003
Rechnitzer A 16049/1902 ASMD with motor....1004
Rechnitzer A 14453/1905 Multiplier motorised....1005
Rechnitzer A 15908/1911 ASMD....1006
Reeves E A 14008/1908 Astronomical device....1007
Regnault & Lambert 243/1864 Add Multiply....1008
Reid W 3691/1813 Trig device....1009
Reid & Blakey 951/1901 Ready Reckoner sheet on board for wages....1010
Rein R & Spitz & Co 4938/1908 Thomas type....1011
Remington Type writer Co 111729 of 1916 Multiply mechanically by quarter squares....1012
Reppert R von 13731/1907 Adder printer....1014
Restieaux E 2482/1879 Calendar on dials....1015
Rheinische Metallwaaren 3511/1911 High angle gun calc....1016
Rheinische Metallwaaren 8181/1915 Range finder....1017
Rhodes W H 567/1858 Proportional compass and divided scale....1018
Richard J & F 2309/1888 Disc & roller integrator....1019
Richardson A D 14426/1904 Circular trig device....1021
Richardson J 8191/1887 Adder....1022
Richmond G 23538/1892 Calc, cash register....1023
Richter O 734/1900 Combined planimeter & pantograph....1024
Riedl C 23343/1907 Multiplier....1025
Ripper W 7324/1900 Steam engine indicator with slide rule....1026
Rinsche F C 13316/1900 Adder printer....1027
Ritchie C 652/1859 Calculating apparatus. Circular dial adder....1029
Rizzoli L 14535/1898 Slide rule for tacheometry....1030
Roberts J 4121/1901 Gas meter pricing....1031
Robertson J 4709/1904 Tab Calc....1032
Robertson T 21924/1914 Slide rule for ship design.....1033
Robinson 256903 of 1926 for Lancashire Optical Manufacturing Co Ltd....1034
Rockford Milling Machine Co 107403 of 1916 Adder multiplier....1035
Roegner G 8910/1901 Tab calc for wages....1036
Roegner G 9314/1902 Tab Calc Wages....1037
Rogers G H 23151/1895 Adder, discs....1038
Rogers J 4924/1824 Measuring Timber Chrono abr....1039
Ronald J 1694/1906 Proportions, wages etc.....1043
Roth Dr. 9616/1843 Stylus adder for sterling Chrono....1044
Rothwell H 25412/1907 Cylinder interest calculator....1045
Rowan & Morton 946/1866 Lat & Long....1046
Rowbotham & Malins 26710/1906 Tab calc....1047
Rowland D 6528/1833 Manufacture of Sextants, Quadrants, Circles, Chrono abr Full....1048

Rumble H H 14527/1890 Adder £sd farthings 1053
Rouget J R 20274/1904 Stylus adder 1055
Runge E 4425/1896 Adder 1056
Russet E W De 13293/1893 Ship's constants 1057
Saint –Yves J A de 14377/1904 Scales for music architecture etc 1058
Salcher A 23173/1906 ASMD 1059
Salcher & Werle 6657/1909 Adder 1060
Salomon A & Wimpenny W H 7546/1905 Slide rule for stock yield 1061
Salomon D 22630/1891 Issuing tickets 1062
Salomon D 4279/1892 Print receipts 1063
Salomon D 22445/1892 Deliver money & calculate 1064
Salomons Sir D L 3615/1888 Photo exposure 1065
Samuel E 12682/1907 Adder printer 1066
Santen H H van 133622 of 1919 Computing scales for wages 1067
Sargent H N 24980/1912 Speed of troops 1068
Saunders H B 26013/1904 Multiplier 1069
Savage R W 3701/1894 Photo exposure SR spiral 1070
Sawyer F L 7452/1915 Trig calc navigate in fog 1071
Sawyer J 2885/1877 Like Napier's Bones 1073
Sawyer J 1642/1878 Like Napier's Bones 1073
Sawyer J 16088/1891 Multiply on typewriters 1074
Saxby S M 1636/1856 Calculating apparatus for solution of spherical triangles 1075
Schabadt A 20998/1897 Add, bands 1077
Schacht & Westerich 25947/1913 Slide rule for trig 1079
See [26] 1079
Schaer A 7737/1895 Slide rule for textile fabrics 1080
Schaer A 10830/1895 Device for testing fabrics 1081
Schaller C 2007/1914 ASMD machine 1082
Scheutz 2216/1854 Calculate and print tables 1084
Schmalcalder C A 3545/1812 Mathematical instruments, to measure angles 1085
Schmolcke J 6272/1907 Adding aid 1087
Schneider E 4364/1895 Tab Calc 1088
Schneider A & Perfler J 18604/1901 Adder printer 1089
Schooling & Randall 4872/1908 Adder lister 1090
Schooling W & Randall F W 23729/1908 Adder lister 1091
Schulze F A 18735/1905 Slide rule for powers & roots. 1092
Schuster E 9797/1902 Adder 1093
Schuster E 87/1908 Pin wheel 1094
Schuster E 16729/1909 Pin wheel machine 1095
Schuster E 14918/1911 Pinwheel 1096
Schwarz G & R 22566/1899 Adding typewriter 1097
Scott J C 1038/1878 Machine to produce scales 1098
Scott & Britannia Works 17642/1892 Photo exposure 1099
Scurfield G G 24553/1894 Circ slide rule 1100
Seaton– Snowdon F 21963/1902 Solve triangles 1101
Seger B 19515/1902 Adder on discs 1102
Seidel & Naumann 15972/1911 Thomas type 1103
Seidel & Naumann 18737/1911 Stylus adder 1104
Seidel & Naumann 28850/1912 Alarm for Thomas machine 1105
Seignon A 278/1883 Tab calc multiply 1106
Sellers J 323/1870 Tabular calculator cylinder. 1107
Sellers & Hopkinson 2816/1871 Tabular calculator 1107
Selling E 8912/1886 Pantograph multiplier 1108
Selling E 23737/1903 Pantograph multiplier 1109

Semle A 24750/1906 Tab calc 1110
Shakespeare J 12615/1894 Adder cash register 1111
Sharp A 18299/1892 Apptus for Fourier expansion 1112
Sharp A 16350/1893 Harmonic analyser 1113
Sharp H S 108005 of 1916 Screw design 1114
Sharpe J 8762/1890 Adder 1115
Shattuck W P 7172/1900 Keyboard adder printer 1117
Shattuck Mfg Co 28737/1902 Printing adder 1119
Shattuck Mfg Co 28739/1902 Stylus adder 1120
Shaw H S H 6206/1884 Ratio of angular velocity 1122
Shephard H 110851 of 1917 Adder for workmen's hours 1123
Sheppard F H 3059/1878 Slide rule 1124
See [28] 1124
Sheridan M J 14623/1896 Slide rule to dilute spirits 1125
Shiek D W 8648/1904 Adder 1126
Siemens 20907/1913 Trig vectors 1127
Silversides, Dudding & Megson 10112/1884 Navigation device 1128
Simmons N 23733/1896 Scales on pressure temp dials 1129
Simone M G de 9738/1915 Analyse wages to coins 1130
Simpson & Woods 28783/1911 Planimeter 1131
Simpson L 6298/ 1909 1132
Simtion P 25345/1912 Tab calc 1133
Skipworth G P 884/1888 Computing scale 1134
Sloan R H 22306/1911 Tab calc for wages 1135
Sloan R H 28662/1913 Tab calc 1136
Smith A 10160/1897 Tab calc for pricing length 1138
Smith A E 13514/1905 Circ disc bridge scorer 1139
Smith A E 21879/1913 Tab calc cylinder 1140
Smith C J & Kleeberg P 3611/1912 Tab calc 1141
Smith E W136090 of 1919 slide rule reading aid 1142
Smith H A 3991/1902 Hand Adder 1144
Smith J W & Davis H 2610/1905 Divide wages 1145
Smith J 12101/1891 Slide rule for navigation 1146
Smith M V 8793/1900 Days between dates 1147
Smith R C 24078/1897 same as US 592067 Slide Rule 1148
Smith R C US592067 1149
Smith R C & Cruickshank 7379/1900 see 24078/1897 1150
Smith R C 17499/1904 Slide rule for decimal point 1151
Smith R C 7731/1909 Slide rule, cursor for decimal point 1152
Smith R H 17357/1999 Helical slide rule 1153
Snell & Bathurst 3679/1888 Tab calc 1154
Soennecken F 10495/1889 Add, subtract 1155
Soncini G 18367/1908 Multiply Napier's bones 1156
Soncini G 17041/1909 Multiply partial products 1157
Sonnet & Boissier 661/1879 Adder 1158
Sonnet & Boissier 3339/1879 Adder 1158
Sperry Gyroscope Co 11665/1915 Spiral slide rule 1160
Sperry E A 22359/1904 SR Watch type 1161
Spicknall M O 2857/1915 slide rule/pencil 1162
Spicknall M O 17440/1915 Hollow slide rule 1162
Spitz & Co 5283/1911 Direct multiplier 1163
Spitz L 4925/1907 Reverse for Thomas type 1164
Spitz & Rein 5283/1911 Direct multiplier 1165
Spurgeon J 12823/1915 Multiply by partial products 1166

Stamper J 124119 of 1919 Tab calc for tax 1167
Stanley J W 646/1886 Adder 1168
Stanley & Amsler 13567/1894 Planimeter 1169
Steiger A W 3842/1900 Calc calendar 1170
Steiger O 20968/1893 ASMD, not the millionaire 1171
Stelfox S H 13852/1910 Folded sliderule 1172
Stewart C E 22240/1895 Tab calc wages 1173
St Louis Computing Co 23826/1903 AM Print 1175
Stimpson W F 5013/1900 Computing scale 1178
Stokes G D C 108172 of 1916 Slide rule for gunnery 1179
Stone F G 9333/1890 Device for gunnery 1180
Stone F G 19824/1890 Artillery ranging 1181
Stone F G 15978/1890 Range finder 1182
Stowe L 4474/1879 Adder 1183
Sutton S H 14891/1886 Small tab calc 1184
Suxspeach J 676/1753 Slide rule, Chrono and abr 1185
Swan D L C 10896/1892 Proportional keys 1187
Sykes & Abbott 102/1882 Educational abacus 1188
Szenhak S 7004/1898 Tab calc, educ multiplier 1189
Tanaka S 8723/1897 9-key adder 1190
Tate S 1392/1881 ASMD 1191
Tate S 65/1884 Arithmometer 1192
Tate S 27364/1903 Update Thomas type 1193
Tattersall H P & Pickard G A 18631/1901 Slide rule photo exposure. 1194
Taylor J W 8187/1906 Subtract fractions 1195
Templeton W G 24199/1901 Cheese cutting and pricing machine 1196
Teetzmann & Co 23816/1913 Pinwheel 1197
Thomas J 3276/1900 Tab calc 1198
Thomas de Colmar 13504/1851 Arithmometer full 1199
Thomas G & Harling G 2083/1907 Slide rule for strength of fabric 1212
Thomas C G G 2228/1907 Tab calc for elec resistance 1213
Thomson J & Petri A 23913/1902 Area of leather 1214
Thomson J H 5540/1881 Log Log Slide rule 1215
Thomson G 14453/1894 Napier's bones book form 1216
Tidswell H R 134752 of 1919 Tab calc to predict sex of babies 1218
Tillman F J 4784/1909 ASMD 1220
Timmis R & Bell J F 653/1892 Add columns 1221
Timmis R & Bell J F 21420/1892 Adder 1222
Todd J G 10119/1908 Adder ticketer 1223
Toledo Computing Scale Co 10013/1909 Drum pricer 1224
Tolton J P 14347/1895 Planimeter for leather 1225
Tourtel J M 16374/1908 Adder 1226
Tourtel J M 7722/1909 Adder printer 1228
Trant E L 10212/1912 A S correct compass course Bands 1229
Travis C L 14342/1893 Change indicator 1230
Travis C L 1034/1894 Date calculator 1231
Tray F H de & Sledding T R 9331/1898 proportional dividers 1232
Tregoning C 10055/1899 A S Discs 1233
Trinks F 19762/1900 Add print 1234
Trinks F 21743/1905 Pin wheel for sterling 1235
Trinks F 22524/1905 Pin wheel for sterling 1236
Trinks F 23606/1900 Adder 1237
Trinks F 10872/1901 Control speed of calculator 1238
Trinks F 11999/1907 Pin wheel 1239

Trinks F 27481/1907 Pin wheel....1240
Trinks F 22435/1908 Pin wheel....1241
Trinks & Schaller 28365/1911 Pin wheel....1242
Trinks F 23689/1913 Transfer mechanism....1243
Troger K E 17291/1904 Circular slide rule....1244
Picture....1244
Trotter A P 1210/1885 Wire gauge....1245
Trotter A P 1302/1890 Slide rule for elec calcs.....1246
Tucker S J 12598/1884 Percentages by triangles....1246
Turck J A 16273/1901 Adder....1247
Twelvetrees W N 17334/1908 Calc for reinforced concrete....1249
Tyler F W 26929/1907 Disk for £sd insurance premiums....1250
Tyrell J 6038/1830 Teaching arithmetic....1251
Uhlig C E 1657/1889 Multiplier as Napier'sBones.....1252
Union Typewriter Co 17651/1899 Adding type writer....1253
Underwood Computing Machine Co 13445/1911 Adder columns typewriter....1254
Underwood Typewriter Co 18937/1909 Add-subtract on typewriter....1255
Underwood Typewriter Co 19550/1909 Add in columns on type writer....1257
United Shoe Machinery Co 11001/1901 Area of fabrics....1258
Universal Accountant Machine Co 9588/1903 Adder printer....1259
Universal Calculator Co 26925/1898 Printing calc....1260
Usill & Browne 4133/1898 Trig demonstrator....1262
Vancu E 5300/1909 Tab calc....1263
Vaughan M 15349/1912 spherical trig plotter....1264
Venturino M E 1623/1915 Tab calc angles artillery....1265
Venturino M E 24833/1914 Plane trig....1266
Vermehren J 13817/1900 ASMD....1267
Vermehren J 2172/1904 Multiply by cones....1268
Vermehren J 23241/1906 Adder....1269
Vermehren J 13039/1909 Mult Divide....1270
Vermehren J 14562/1912 Multiply....1271
Vetch G A 3741/1896 Adder, discs or slides....1273
Victor Cash Register Co 21834/1894 Cash Register....1274
Vogel V 7540/1810 Add subtract....1275
Wachter E & Hugle S 7080/1910 Abacus....1276
Wahl J C 11696/1907 Adder on type writer....1277
Wakefield C J 7778/1911 Adder billiard scorer....1278
Wales C 21178/1902 Adder....1279
Walford E L 2875/1881 Slide rule for exchange....1280
Walker A 11439/1908 Small Tab calc....1281
Walker G 10499/1914 Adder printer....1282
Waller J E 1739/1877 Adder....1283
Wallich C A N 7347/1902 Adder scorer....1284
Walls R R 136043 of 1919 Harmonic analysis by pendulum....1285
Wallwork T 730/1866 calc apptus for multiplication 1286
GB Patent 730, 10 March 1866 Thomas Wallwork Reckoning quantities full....1287
Wanderer Werke 19373/1912 Adder....1294
Watkin H S 1877/1870 Slide rule for height....1295
Watkins A 1388/1890 Photo exposure....1296
Watkins A US Pat 456869 of 1891....1297
Watkins A 14364/1893 Photo exposure....1298
Watkins A 23894/1893 Photo exposure....1299
Watkins A 25000/1894 Photo exposure....1300

Watkins A 36281/1898 device for photo exposure 1301
Watkins A 5737/1900 Photo exposure slide rule....1302
Watkins A 19331/1900 Watch device for photo exposure 1303
Watkins A 5737Photographic shutter with Slide rule 1304
Watkins A 27822/1902 Slide rule for photo exposure 1305
Watkins A 22456/1907 Slide rule for photo exposure 1306
Watkins A 12120/1909 Slide rule photo exposure 1307
Watson A J 1676/1891 Military calculating board....1308
Watson J 2146/1905 Scales for volumes....1309
Watson T H 9900/1894 SR for displacement of ships....1310
Webb 2382/1869 Adder 1311
Webb C H 9269/1888 nine-digit adder 1315
Webb C H 8891/1889 Circular adder....1316
Webb C H 7633/1893 Stylus Adder....1317
Webb M J 21646/1914 Coins for a wages list....1318
Welter J 3227/1905 Tab calc mult....1319
Welton F R 21651/1905 Adder 1320
Wendler A 7842/1911 Spher trig 1322
Wendling–Hoch Adding Machine Co. 21592/1911 Adder printer motorised....1323
Werner H 12891/1912 Thomas type 1324
Wesley E A 13550/1890 £sd Adder 1325
Wesley E A 5834/1892 Disc adder....1326
Weston H V P 10482/1910 Slide rule for trig 1327
Weston R E 5387/1903 Adder for bridge scoring 1328
Weyrs F S Fleshman J R & Duhring W J 3213/1904 Tab calc Wages....1329
Wheat F 24565/1911 Adder for avoirdupois values....1330
White Adding Machine Co 24026/1914 Adder....1331
White & Bean 10231/1907 Area calculator....1332
White & Cook 15356/1915 tab calc anti aircraft guns 1333
Whitehead E A 22214/1901 Piston performance 1334
Whiting W R G 21955/1907 Planimeter 1335
Whyman J J & Ross J A 9088/1915 Add angles Artillery 1336
Wiberg K E & Berndes G F 6546/1893 Adder....1337
Wilcox R 18423/1892 Ready Reckoner 1338
Wilkinson F A,Gibson C C & Reiss F E 17306/1899 Watch case adder for £sd 1339
Williams P L A 21887/1905 Plate & rule for ratios 1340
Williams R N 2384/1915 Alpha punch card....1341
Williams R N 3829/1915 Add punch cards....1342
Williams-Ellis M I 13887/1915 Circ slide rule for artillery 1343
Willis E J 3186/1895 Planimeter Indicator diagram....1344
Wilson E 14533/1902 Slide rule watch type 1345
Wilson J 7823/1905 Tab calc cards....1346
Wilson J 13528/1905 Tab calc cards....1347
Windle E 133577 of 1919 Trig Slide rule 1348
Winter D T 1919/1879 Planimeter weigher for skins....1349
Wise E W 678/1895 Tab calc computing scale 1350
Witter E E 6327/1890 Adder....1351
Witsell J W 16943/1912 Finger rotated adder....1352
Wolfe J C 8496/1894 Adder for typewriter....1353
Wolfe J C & Morton E W 9892/1892 Add Columns on typewriter 1354
Wolodarsky H 14716/1904 Abacus....1356
Wolstenholme T 764/1893 Tab calc....1357
Wood W 15676/1887 Calc calendar....1358
Wright W 6647/1908 Adder on typewriter....1359

Wright W 8740/1909 Adder for type writer 1361
Wynne G F 10617/1893 Photo exposure 1362
Yates J 12959/1888 Adder 1363
Yokota S 18218/1907 Slide rule 1364
Young H 16237/1913 Circ slide rule for horsepower 1365
Young J H 17153/1889 Slide rule Timber, earthwork etc. 1366
Yule G U 14928/1894 Harmonic analyser 1367
Zarth J H A 4789/1879 Fraction calculator 1368
Zenith Fabrique des Montres 134133 of 1918 Watch type slide rule 1369

Guide to Use

The CD-ROM contains Four Files

1. The README document

2 The Excel File GB CD Calc Patents XL

This contains details of over 1900 GB Patents
It can be sorted by any of the columns, which are:-

- Date
- Patentee
- Class
- Area
- Country of residence of the Patentee

On the disc, the sheet GBAll is the master listing, and is in chronological order.

The Sheet Alpha is the same list, in alphabetical order of patentee.

Many of the patent numbers after 1919 are shown in blue - note underlined and most of these are hyperlinked to the esp@ce net website. If you are on line a click on the blue number will take you straight to the full patent.
The links were updated to March 2004, but as esp@ce is still growing you may find more items

If the number is not in blue underlined, or if it does not show the hyperlink when you place the cursor over the cell, it is not hyper linked. To get to the full patent in this case

Go to http://ch.espacenet.com/espacenet/ch/en/e_net.htm
Enter the patent number gbxxxyyy as shown below at the red arrow
Hit **Go** to the right of the number

The same applies to the US Patent numbers, many of which are also hyper linked to esp@ce.

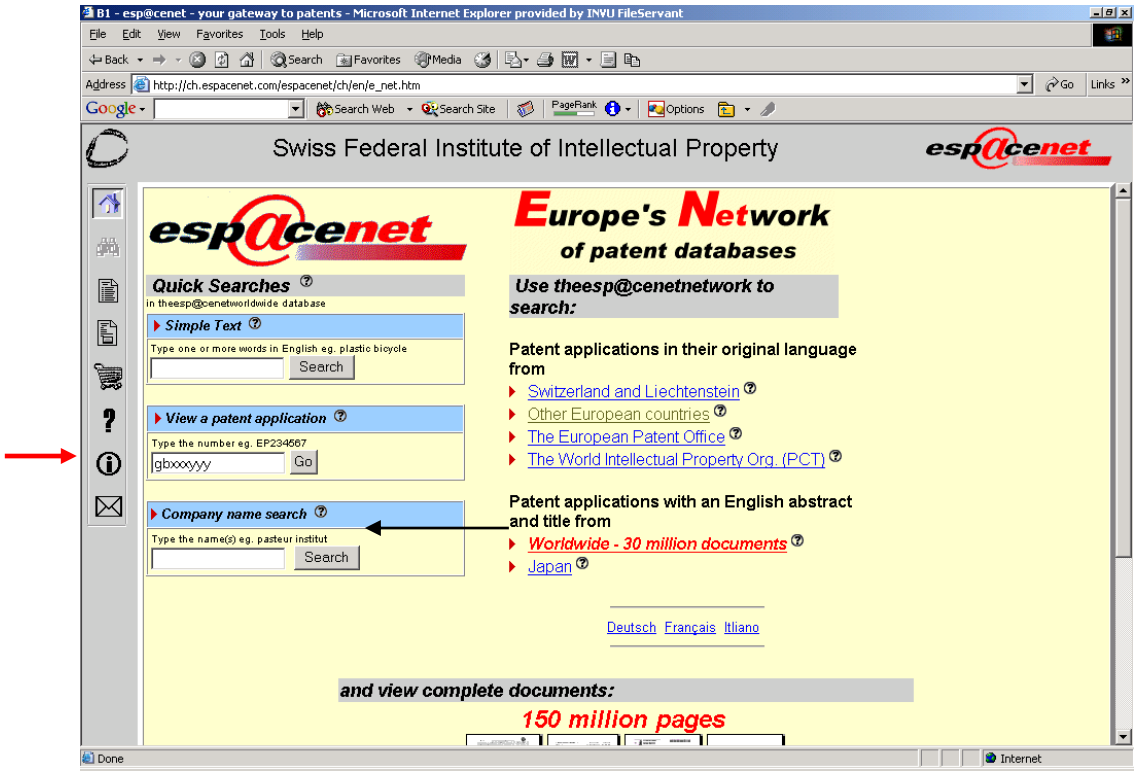

3, The full Illustrated Word file *CalcPatsV3X*
This comprises some 1400 pages.

There are two ways to navigate this long Word document.
A) Use the Document Map facility: in "View" select "Document Map, which will appear on the left. Click on the desired section.

B) Go the Contents, and Click on the desired section,

4 An Excel Reader for those who do not have a full Excel.

Foreword by Peter M Hopp

Of the machines for minimising mental labor in computation, no device has been of greater general interest than the Slide Rule. Few instruments offer a more attractive field for historical study. Its development has reached into many directions and has attracted men of varied gifts. Among those are not only writers on arithmetic, carpenters, and excise officers, but also such practical engineers …. So starts the Preface to Florian Cajori's ***A History of the Logarithmic Slide rule and Allied Instruments.*** Arguments as to whether patents enabled or a stifled the inventive processes have raged throughout the ages, that apart, many of the inventors mentioned by Cajori in his preface made use of the patent system to protect their ideas or encourage investors. There is thus a considerable body of information available to inform those interested in the development of the technology and the expansion of ideas within this particular area. This has been a source of data that has been invaluable to me since I started being interested in slide rules and other forms of calculation.

Here we have the first – and only – comprehensive collection of patent data relating to calculation of all sorts, a real "Magnum Opus". From this we can trace the evolution of the slide rule, the mechanical calculator, planimeters, navigational instruments, as well as a multitude of peripheral and associated devices from the very earliest patents right up to the last years of the 20th century. This is a unique and really valuable research resource which will be of considerable value to a diverse body of people, from academics studying the development through collectors interested in dating items in their collections, to dealers and other people involved in the business of these devices.

To have a "searchable" database of this information is of inestimable benefit, I can but commend this to all interested parties and take my hat off to Bruce for the sheer volume of data that he has been able to collect, assimilate, and present in such a valuable and easy to use way.

Peter Hopp

April 2004

INTRODUCTION

In 2002 I prepared for the UKSRC a facsimile of the Indexes to Abridged Patent Specifications 1855 to 1963. [1]

That facsimile is not machine readable, but has nevertheless proved to be helpful in identifying patents granted to individuals or companies. It remains useful as the quickest way to correct errors and omissions in the present work.

The purpose of this new work is to provide an **illustrated machine readable summary** of all GB patents for non electronic calculating devices, **hyper linked** where possible to the esp@ce data base containing thousands of full patents.
I have also taken the starting date back to 1731 with help from Peter Hopp and as listed in his book: Hopp[2]
The CD-ROM contains extracts, text and drawings from about 1400 abridged patents, a list in chronological order of over 4800 patents and a few important full patents, as listed in the Table of Contents.

The illustrations make it easy to trace the development of devices over time and by inventor. The abridgment descriptions are not as detailed as the much more bulky full patents, but are intended to indicate to the reader whether it is worth getting hold of a copy of the full patent. This can be done in two ways, but for each you must know **the Year and the number of the Patent if before 1919**.

1. Join the British Library, consult the patent in Science 1 South, and make a copy on the machines provided, at 20p a page.
2. Or facsimiles can be ordered from the Patent Office.

Details on their web site:
http://www.patent.gov.uk/about/finance/publications/howto.htm
or their Enquiry desk on 08459-500-505 (UK local rate), +44 (0) 1633 813930 (International) and
http://www.patent.gov.uk/contact.htm
When ordering from the Patent Office it is a good idea to specify the **name of the inventor** and the **nature of the invention** as well as the number and year. This will avoid the expense of getting an unwanted copy due to any error of transcription of the numbers.

Full patents from 1919 on the web

Readers wishing to see the full patents since about 1919 can find them on the espace web site http://ch.espacenet.com/espacenet/ch/en/e_net.htm. The intention is to provide patents back to 1870 in due course. As of March 2004 all patents back to 1900 have been photocopied, but they are not yet abstracted and indexed, so they are not yet accessible.

The GB Patent systems

For details of the GB Patent system numbering, dates, and relevant product classification see my earlier book, or Van Dulken.[3], John Knott [4], Hewish [5] or Peter Hopp.[6] Note that the dating system can be very confusing.

For **Continental** Slide Rule patents Schuitema[7] is excellent.

US patents are often almost identical to GB patents, the drawings are much better and they are easily downloaded from the USPTO web site http://www.uspto.gov, I have therefore shown corresponding US patent numbers for early items where known, and given one or two example drawings. Many of these have hyperlinks to esp@cenet in the Excel workbook.

Coverage of this listing

The listing is a fairly complete listing of all products designated as calculators within the later Class Registers or selected by me in the early class "Optical, Mathematical and other Philosophical Instruments".
The primary focus is on devices for carrying out the four rules of Arithmetic (Add, Subtract, Multiply and Divide). From about 1960 I have omitted most of the electronic calculators from the main listing. They are however scheduled in Work sheet **enc** in the XL workbook.

It does **not** include;

- Many **Counters** with no cash capability.
- All the many **Cash Registers**, but includes some with ASMD capability. The calculating distinction between a cash register and an adding machine is fine.
- all of the very similar **Calendars** and days-between-dates calculators, even though they are important for calculating interest.
- **Time-clocks**, **Tell-tales**, and **Watchman's Controls**, (of which there are surprisingly many), gauges, measuring devices, coin-operated devices, measured quantity delivery devices.
- Most of the **Ticket** and **Fare** machines, such as taximeters or bus tickets.
- Every single one of the hundreds of patents issued to NCR, Burrough, Trinks and so on.

From about 1950 the patents become mainly electrical and electronic. There is no clear cut-off point for non electronic.

This listing will be found most useful when read in conjunction with Hopp[2], Martin[8] and Horsburgh[9] and Cortada[10].

In this document I have omitted most of the Computing scales unless included in the Group "Registers" (about three).
I have a separate annotated list on Excel of some 1900 US and GB patents for computing scales.

I have endeavoured to minimise errors by;

2 Providing facsimiles of the early abridgments, avoid transcription errors in the patent number.
3 Creating much of the listing by selecting product classes on esp@ce, and then double-checking against the facsimile index to the abridgments.
3. Providing hyperlink links to esp@ce.

However, I am only too aware that there are many errors and omissions remaining, and would be grateful for any corrections or additions sent to me at;

Bruce.O.B..Williams@btinternet.com

Bruce Williams, London, April, 2004

Introductory essay

Now that I have completed this first draft of a database on GB Patents for calculating devices, I realise the full extent of the task that I undertook.

I began from the standpoint of a collector of slide rules. Then I gradually moved to looking at a wider arena, the devices used for working out prices in non-decimal currency for non-decimal units of weight, length, and time. In reviewing the GB Patent abridgments I noticed the large number of **tabular calculators**, and these in turn led me on to **computing scales**.
Again, there was evidently a great deal of interest in the measurement of **areas** with many patents for planimeters and devices for the areas of pieces of cloth or leather.

Similarly, there were numerous instruments for the solution of triangles, for surveying or gunnery, and for spherical trigonometry for navigation or astronomy.

I have tried to see how many patents were actually exploited. Mainly I relied on Hopp, Martin and the publications of the UKSRC and the Oughtred Society, supplemented by my own watch of items offered for sale on eBay.

Sources at the British Library

1 Titles Chronologically arranged 1617-1852

Text only, no drawings

Referred to here as “Chrono”.

TITLES

OF

PATENTS OF INVENTION,

CHRONOLOGICALLY ARRANGED

FROM MARCH 2, 1617 (14 JAMES I.) TO OCTOBER 1, 1852 (16 VICTORIÆ).

Printed and Published by Order of the Honourable the Commissioners of Patents,

UNDER THE

ACT of 15 & 16 VICTORIÆ, Cap. 83. Sec. XXXII.

BY BENNET WOODCROFT,

SUPERINTENDENT OF SPECIFICATIONS, INDEXES, &C.

LONDON:

PRINTED BY GEORGE EDWARD EYRE AND WILLIAM SPOTTISWOODE,

PRINTERS TO THE QUEEN'S MOST EXCELLENT MAJESTY.

PUBLISHED AT THE QUEEN'S PRINTING OFFICE, EAST HARDING STREET, NEAR FLEET STREET.

1854.

2 The abridgments from 1855

This note comes from Hewish[5]
“The first abridgments series”

Patent specifications are filed in a single chronological series by country, regardless of subject. During much of the 19th century the Office was concerned with the problem of how to make this information accessible to the searcher, who will be interested in only a fraction of it, but who will want that fraction in some detail.

In 1859 the Office was able to issue a small but striking two-colour poster advertising "ABRIDGMENTS (in classes and chronologically arranged) of all SPECIFICATIONS of patented inventions, from the earliest enrolled to those published under the Act ... to enable the humblest of inventors to examine for himself whether his discovery has been previously patented or not".

> The series of classified abridgments, the "little red" volumes begun under Woodcroft are still regarded affectionately by the patent professions as the first of the many. (It has been said that he invented abridgments but there was a possible model in the calendars of state papers being published by his acquaintances at the Record Office). They attempt to cover pre-1852 as well as the "new law" patents in a single volume, possible only before the flood of new patents became too large.
>
> Some details of their publication are now obscured by rebinding; they are "little red abridgments" because of the former Patent Office Library set; they were almost certainly in paper-cover blue book attire originally. Curiously they do not follow the classification used in Woodcroft's index. Each volume has a name-index of patentees and a subject index listing them under each subdivision of the main subject.

The first to appear, appropriately for this sanitation-conscious age, was *Drain Tiles and Pipes* (1857) with a preface by Woodcroft:

BOBW note
As described above, there are two series of abridgments in the BL one is by Class, the other has all Classes muddled together. Most of the copies here are from the Class series. These do not show the inventor’s address. I used the mixed series to ascertain inventor’s country, and for some copies.

Commentary
Early GB Calculating devices for which no patent has been identified.

These include:
Sir Samuel Morland's devices

- Adder 1666
- Multiplier 1668
- Trigonometer
- Sir Samuel Morland (1625-1696) was an engineer and Master Mechanic to Charles II. Nicholas Stephenson wrote, "If any Gent. or other, especially Ladies, that desire to look into their disbursements, or laying out, and yet have not time to practise in numbers, they may from Mr. Humphrey Adamson dwelling next Turnstile in Holbourne, have those incomparable Instruments, that will show them to play Addition and Subtraction in £ s. d. and whole numbers, without Pen, Ink or help of Memory: which were the invention of that worthy Person and Ornament of his Country, Sir Samuel Morland, Bart.". On 14 March 1667/8, Samuel Pepys wrote in his Diary, "... my Lord had Sir Samuel Morland's late invention for casting up of sums of £. s. d.; which is pretty but not very useful". Morland also invented a "Multiplying Instrument".

  Science Museum, Oxford http://www.mhs.ox.ac.uk/database

Also see[11]

Charles Babbage did not take out any patents for his engines. Swade [Swade, 2000 #111] writes; "Although Babbage was a prolific inventor, he was strongly opposed to patents. He believed that the products of genius should be freely available to mankind in general , and lamented that the poor rewards for scientists obliged them to restrict for profit the wider benefits of invention". The source of this quotation is Babbage, Charles. *Reflections on the Decline of Science in England, and on some of its causes*. London: B. Fellowes, 1830, p. 129.

A more accessible reprint is of course the collected works:
Campbell-Kelly, Martin, ed. *The Works of Charles Babbage*. 11 vols. London: William Pickering, 1989, Vol. 7, p. 66-7.

Kindly communicated by Dr.Swade

Charles Babbage's son, Henry Prevost Babbage, is represented here by 103999/1894, a small sterling adder.

Statistical findings from this Listing

Using the Excel version of the listing many analyses are possible:
For details see the Excel sheets. Note that some data is incomplete and /or subjective.

Inventors, Patentees and Agents

Definition of The Inventor is not simple. The first name on the abridgment is that of the Patent agent, not the inventor or patentee. The Agents were almost an hereditary caste many being members of the Newton clan. To add to confusion, one of the Newtons was also an inventor.
For this reason the Boucher watch type circular slide rule is sometimes known as Newton's.

Sometimes I have used the name of an individual only, but where a Company name is known I have preferred to use this.

The most prolific GB patent holders are:

NCR (National Cash Register Company), U S A.
This company applied for 2400 patents between 1884 and 1944 according to Cortada[10].

The highest scorers in descending order:

NCR	178
Burroughs	64
BTM*	42
Mercedes	33
Underwood	30
Trinks	26
IBM	23
STC	22
Broido	19
Odhner	18
Remington	16
Felt	15
Powers	15
Bell Punch	14
Hollerith H	12
Faber	11
Wanderer	10
Facit	8
Watkins A	8

Thornton	6
Brunsviga	6
Gardner Co	5
Grimme Natalis	5
Krupp	5
Western	5
Bull	4
kooperativa	4
Goldman	4
Meilicke	4
Wales	3
Elliott-Fisher	3
King	3
Seidel	3
Ericsson	2
Askania	2
Keuffel	1
Pickett & Eckel	1

I have ignored accents because their use makes it more difficult to search a document unless the searcher is very proficient at typing in accents.

Inventor's country of residence

Roughly adjusted for changes in states, based in the ISO codes.
Abbreviation list and count.
List in descending order of count.

US dominates the list, followed by GB and then Germany.
GB includes Ireland up to 1920.

Number	Code in XL	Country
1098	GB	Great Britain
829	US	United States
348	DE	Germany
134	FR	France
87	SE	Sweden
45	CH	Switzerland
32	IT	Italy
27	AH	Austria-Hungary
20	AT	Austria
17	CAN	Canada
15	NL	Netherlands
13	CZ	Czechoslovakia
13	DK	Denmark
11	X	not traced
10	RU	Russia
9	AU	Australia
9	NZ	New Zealand
7	ZA	South Africa
6	HUN	Hungary
6	JAP	Japan
4	BE	Belgium
4	ES	Spain
4	IND	India
3	AR	Argentina
3	FI	Finland
3	MEX	Mexico
2	IS	Israel
2	POL	Poland
2	POR	Portugal
2	Ceylon	Ceylon
1	BRAZ	Brazil
1	EST	Estonia
1	GR	Greece
1	HK	Hong Kong
1	IQ	Iraq
1	MS	Mauritius
1	SING	Singapore
1	SR	Southern Rhodesia
1	TN	Tunisia
0	CHIN	China
0	CYP	Cyprus
0	GO	Goa
0	MAL	Malta
0	NOR	Norway
0	RUM	Romania
0	TW	Taiwan

This page intentionally blank

Table for the whole period for calculating devices in descending order.

	1884	1913	1938	1977
GB	79	68	62	51
US	7	9	14	28
DE	1	11		16
France	5	4	3	6
Japan	--	-	0.1	9

The list above of the geographical source of **calculator** patents may be compared with an extract of data from Van Dulken p.86 for the mix of **all** GB patents over time.
Percentages All Patents. Other countries smaller.

Class of device used here

These classifications are subjective, but can be readily checked against the abridgments.

Abbr	Full name
ab	abacus
ant	analog trig
enc	electronic
ma	mechanical adder
mis	miscellaneous
mm	mechanical multiplier
nb	Napier's bones
pc	punched card
pl	planimeter
tc	tabular calculator
sr	slide rule

Numbers of each Class per decade ending:

Classes	ab	ant	enc	ma	mis	mm	nb	pc	pl	sr	tc	All
1731-1999	21	66	18	703	291	233	8	41	27	364	215	2,906
Decade to												
1799	0	0	0	0	2	0	0	0	0	4	0	8
1809	0	0	0	0	1	0	0	0	0	0	0	1
1819	0	2	0	0	1	0	0	0	0	0	0	4
1829	21	66	18	703	292	233	8	41	27	364	215	2
1839	0	1	0	0	1	0	0	0	0	0	0	3
1849	0	1	0	1	4	0	0	0	0	0	2	9
1859	0	2	0	3	7	2	0	0	1	1	2	18
1869	0	1	0	2	7	3	0	0	0	1	4	20
1879	0	3	0	11	17	1	0	0	1	5	7	51
1889	1	6	0	21	19	8	2	1	3	17	18	105

Classes	ab	ant	el	ma	mis	mm	nb	pc	pl	sr	tc	All
Decade to												
1899	1	14	0	66	37	12	2	2	4	33	28	257
1909	6	12	0	221	52	55	2	4	14	57	47	537
1919	6	15	0	162	36	60	1	12	3	64	39	439
1929	1	0	0	27	20	27	1	5	0	66	46	210
1939	5	6	4	165	53	50	0	9	1	39	10	608
1949	0	2	5	9	5	7	0	2	0	7	1	264
1959	0	0	7	10	19	7	0	4	0	36	10	204
1969	0	0	2	5	6	1	0	2	0	21	1	136
1979	0	1	0	0	0	0	0	0	0	9	0	13
1989	0	0	0	0	1	0	0	0	0	3	0	10
1999	0	0	0	0	2	0	0	0	0	1	0	5

Numbers in each application area

Application area

Again, these are subjective but checkable.

Abbr	Full
cr	cash register
edu	education
int	interest
mil	military
mis	miscellaneous
nav	navigation or naval architecture
phot	photographic
pri	pricing
sur	survey
wag	wages
tim	timber

	cr	edu	int	mil	mis	nav	phot	pri	sur	wag	tim
1799	0	0	0	0	6	1	0	0	1	0	0
1809	0	0	0	0	0	0	0	0	0	0	0
1819	0	0	0	0	1	0	0	0	0	0	0
1829	152	0	0	0	5	1	0	0	1	0	0
1839	152	0	0	0	0	0	0	0	0	0	0
1849	0	0	0	0	0	4	0	0	0	0	0
1859	0	25	21	88	1394	118	19	88	17	33	16
1869	0	24	0	0	0	1	0	0	0	0	0
1879	0	25	0	0	5	1	0	1	0	0	0
1889	1	0	0	0	10	2	0	0	0	1	1
1899	27	0	1	1	11	3	0	2	0	0	0
1909	56	0	0	1	29	2	0	2	0	2	0
1919	37	1	3	0	40	9	2	3	2	1	2
1929	5	2	1	6	118	15	4	17	7	3	2
1939	19	7	10	4	345	9	5	15	6	9	4
1949	6	5	2	20	209	22	0	10	1	10	2
1959	1	1	3	6	64	3	1	18	0	4	2
1969	0	3	1	31	315	21	0	9	0	3	1
1979	0	0	0	19	149	14	4	4	0	0	0
1989	0	0	0	0	64	7	3	4	0	0	0
1999	0	1	0	0	23	3	0	3	0	0	0

GB Calculating Patents by decade in context of All Patents

Table of Calculating patents per Thousand Patents by decade:

Decade to:	Calc. per thousand	All GB Pats. in decade	***Calc. Patents***
		1,000	
1799	7.0	647	7.00
1809	1.5	924	1.00
1819	3.2	1,137	3.00
1829	1.8	1,451	2.00
1839	2.1	2,452	3.00
1849	3.7	4,587	9.00
1859	3.9	25,787	18.00
1869	0.8	40,182	20.00
1879	1.3	52,253	51.00
1889	2.0	305,223	103.00
1899	0.8	305,223	256.00
1909	1.8	336,489	537.00
1919	1.3	406,320	434.00
1929	0.5	444,699	198.00
1939	1.4	444,699	610.00
1949	0.6	459,197	263.00
1959	0.4	441,362	202.00
1969	0.3	631,184	136.00
1979	0.0	651,008	13.00
1989	0.0	667,591	
1999	0.0		

The proportion of calculator patents remained steady between **0.2 and 2.5** per thousand for two centuries from1800 to 2000.

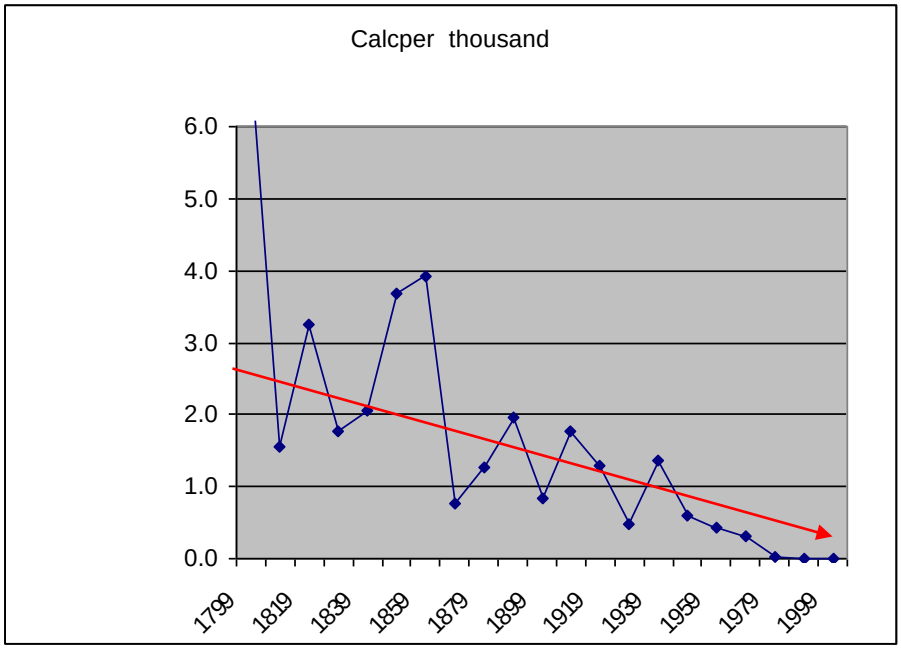

UGI's or USELESS GOOD IDEAS?

Cheese Cutter

The reader may wonder why I have included some rather odd looking devices, for example GB Pat. 24199/1901 by W. G. Templeton for a cheese cutting device.

24,199. Templeton, W. G. Nov. 28.

Angle gauges; computing-scales.—In connection with a cheese-cutting machine a gauge is used for determining the size of the sector to be cut, and for computing both weight and price. The gauge comprises quadrant bars 32, 38 on which are coiled springs 34, 39 coloured at equidistant points or otherwise provided with designating marks. The total weight of the cheese being known, the collar 36 is adjusted on the bar 32 so that the divisions on the spring 34 represent units of weight. The divisions of the spring 39

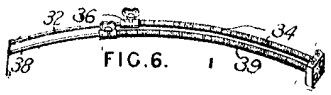

FIG.6.

represent prices, and the spring is adjusted until the desired price per unit of weight is shown. The gauge is then ready for adjusting the cutting-knife, weighing of the cut sectors being unnecessary.

Or 24516/1907 for another similar device from Canada.

24,516. Boult, A. J., [*MacLaren Cheese Cutting Machine Co., A. F.*]. Nov. 5.

FIG.1.

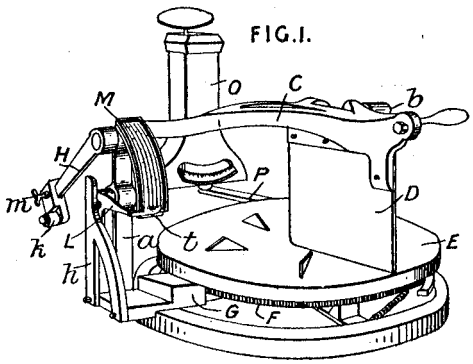

Scales.—In a cheese-cutter provided with a computing-scale, a pointer *t* carried by a bell-crank lever L moves over a scale M and indicates the amount cut. The scale M is divided into a series of vertical columns, corresponding to the price of the cheese, which are divided into equal-value portions.

Were these UGIs? I have not found a GB example but there was a real American Product. The Pioneer Computing Cheese Cutter based on US Pat. 825758/1905.

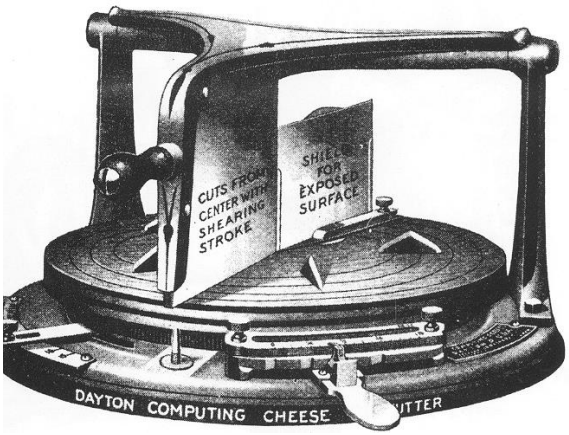

No. 20 Dayton Cheese Cutter

The Pioneer Computing Cheese Cutter.
Slices cheese in any weight slice, from one ounce to the weight of the cheese.
Specifications….

So I have included many apparently useless ideas. For example, the early devices for calculating longitude were probably useless,

Homing pigeons

But should I have ignored 14067/1896, by Barker F and C, " intended principally for recording the departure or arrival of homing pigeons, but may be used for other purposes? It is sub-classed as a Time Checking Apparatus rather than a calculating apparatus, so has been omitted.

Militaria

Military patents appear as early as 1907 from both sides of the channel.

The Table above shows 220 military patents in all to 1999.

Krupp 16588/1908 Trajectories of projectiles.

16,588. Krupp Akt.-Ges. F. Oct. 30, 1907, [*date applied for under Section 91 of Patents &c. Act, 1907*].

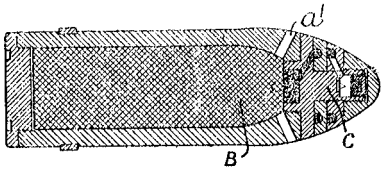

Indicating trajectories of projectiles.—Projectiles containing a smoke-producing combustible charge B have an adjustable time-fuse C for igniting the said charge. Holes a^1 are provided for the escape of the flame. The projectiles are specially applicable for bombarding war balloons. A suitable charge consists of a mixture of black powder, saltpetre, magnesium, and resin.

821

Other examples in the list relate to field gunnery and forts.

Sterling £ s. d. devices

69 patents are marked in the Excel table as specifically for non-decimal calculations mainly £ s d, but some for avoirdupois.

Academic/curatorial inventors - the great sources

Two names very familiar to any student of the history of scientific instruments or calculators are Baxendall[12] see Pat. 105371/1917 Spherical trigonometry.

And Horsbrugh[9]
See Pat. 11023/1904 Polar plotting paper.

Acknowledgements

My thanks to Colin Barnes, and Peter Hopp, the driving forces of UKSRC, for their continuing help and encouragement with this project, including endless hours of proof checking, and to Peter for his Foreword, to Bob Otnes, of the Oughtred Society in particular for the notes on the patents for the Webb adder, to Dr Doron Swade for the note on Babbage, and to Stephen van Dulken, for his help with Patents at the British Library. To Professor Roger Johnson at Birkbeck College, University of London, who is supervising my work on a Ph. D Thesis of which this listing is a part.

To Colin Labouchere for the picture and instructions of the Adal calculator.

For information on UKSRC publications noted below see the web site http://www.sliderules.org.uk

Bibliography

[1[B. O. B. Williams, *GB Slide Rules & Calculating Apparatus – Indexes to Abridged Patent Specifications 1855-1963*. England: Barnes/UK Slide Rule Circle, 2002.

[2] P. M. Hopp, *Slide Rules, Their History, Models and Makers*. Mendham, N.J., USA: Astragal Press, 1999.

[3] S. Van Dulken, *British Patents of Invention, 1617-1977*. London: British Library, 1999.

[4] J. V. Knott, "UK Patent System and Selected Slide Rule Patents", in *Slide Rule & Calculation Monographs*, Vol.1. England: Barnes/UK Slide Rule Circle, 2002.

[5] J. Hewish, *Rooms near Chancery Lane, The Patent Office 1852-1833*: The British Library, 2000.

[6] P. M. Hopp, "The Substance of the UK Patent System, 1600-1854", *Slide Rule Gazette*, Issue No. 3, 2002.

[7] IJ. Schuitema, *The Slide Rule, Technical Cultural Heritage*: Amsterdam, The Netherlands: Author, 2003.

[8] E. Martin, *Die Rechenmaschinen und Ihre Entwicklungsgeschichte*, Calculating machines: Their History and Development, Cambridge, Mass. USA: MIT Press 1992ed. 1924.

[9] E. M. Horsburgh, *Handbook of the Napier Tercentenary Celebration*, Reprint 1982ed. Edinburgh: G. Bell & Sons, 1914.

[10] J. W. Cortada, *Before the Computer IBM et al 1865-1956*, Paperback 2000ed. Princeton, N.J. USA: Princeton UP, 1993.

[11] H. W. Dickinson, Samuel Morland Diplomat and Inventor 1625-1695. Cambridge, England: Heffer for Newcomen Society, 1970.

[12] D. Baxendall and J. Pugh. *Calculating Machines and Instruments*. London: Science Museum, 1975.

[13] P. A. Kidwell, "Planimeter", in *Instruments of Science*, B. Warner, Ed: Garland, New York, 1998.

[14] J. Marguin, *Histoire des instruments et machines a calculer*: Hermann, Paris, 1994.
[15] G. Clifton, Directory of British Scientific Instrument Makers: Zwemmer, London, 1995.
[16] B. O. B. Williams, "Poly-slide Rules", paper presented at the 8th International Meeting of Slide Rule Collectors, Leamington Spa, England, 2002.
[17] P. M. Hopp, "Boucher calculators (continued)", *Slide Rule Gazette*, Issue No. 4, 2003.
[18] R. K. Otnes, "Charpentier Calculator", *Journal of the Oughtred Society*, Vol. 0, No. 0, 1991.
[19] J. V. Knott, "Fowler & Co.", *Journal of the Oughtred Society*, Vol. 4, No. 2, 1995.
[20] P. Kidwell, "Adding Machines of Chicago 1884-1930", *Annals of the History of Computing*, 2001.
[21] C. Barnes, "Circular Calculators of Fearns & Mear", *Slide Rule Gazette*, Issue No. 2, 2001.
[22] B. O. B. Williams, "Ready Reckoners and Tabular Calculators", paper presented at the 9th International Meeting of Slide Rule Collectors, Amsterdam/Breukelen, Holland, 2003.
[23] C. Barnes, *Otis King Calculators – a History of Production*, Fordham, Ely Cambs., UK: Colin Barnes, 1999.
[24] Andrewes, "The Quest for Longitude", paper presented at The Longitude Symposium, Cambridge, Mass., USA.
[25] C. Barnes, "Lords Calculator", *Slide Rule Gazette*, Issue No. 1, 2000.
[26] C. Schure, "The Robinson Calculator", *Journal of the Oughtred Society*, Vol. 9, No. 1, 2000.
[27] D. von Jezierski, "System Cuntz, an Outstanding Slide Rule", *Slide Rule Gazette*, Issue No. 4, 2003.
[28] M. Lindgren, *Glory and Failure, Georg & Edvard Scheutz*: MIT Press, Cambridge, Mass. USA, 1990.
[29] J. V. Knott, "Sheppards' Improvements in Slide Rules", *Slide Rule Gazette*, Issue No. 2, 2001.
[30] S. Johnston, "Making the Arithmometer Work", *Journal of the Scientific Instrument Society*, Vol. 52, 1997.
[31] J. A. V. Turck, *Origin of Modern Calculating Machines*, Chicago: Western Society of Engineers, "The Gemmary" reprint, 1921.
[32] P. A. Kidwell, "The Webb Adder", *Rittenhouse*, Vol. 1.
[33] P. M. Hopp, "Mystery Pocket-Watch Calculators", *Journal of the Oughtred Society*, Vol. 9, No. 1, 2000.

LIST IN CHRONOLOGICAL ORDER

#	Year	Patentee	Country	Pat Number	Copied	Descr
1	1731	Bucknall W	GB	528	Chrono abr txt	Mathematical machine for improvement in astronomy and navigation.
2	1753	Suxspeach J	GB	676	Chrono abr txt ref	Instrument called "The Catholic Organon or Universal Sliding Foot Rule". This is the first slide rule patent for a combined sliding foot rule, telescope and quadrant.
3	1753	Hulls & Bradford	GB	686	Chrono	Machine for weighing gold coins etc, also a sliding rule for taking the contents of solids and superficials
4	1763	Delamain R	GB	2	Hopp See Ref UKSRG #3/2002	By Royal Letters Patent. The Grammelogia or Mathematical Ring.
5	1780	Dicas J	GB	1,259	Chrono	Constructing hydrometers with sliding-rules to ascertain spirit strength. This is actually a line of numbers, 0 - 360, on a rod opposite to which is placed the strength of spirits. This shows the strength of spirits at any degree of heat.
6	1780	Beck G	GB	1,274	abr txt full d	Surveying device with slide rule
7	1790	Leguin E	GB	1,753	abr txt full d	Instrument for calculating longitude by the lunar method
8	1796	Jones T	GB	2,083	Chrono txt Full extract ocr	Detecting errors in accounts
9	1803	Atkins , R	GB	2,737	Chrono ref	Construction of hydrometers for ascertaining the strength of spirituous liquors; adapting a sliding rule to the same.
10	1812	Schmalcalder C A	GB	3,545	abr txt Full d ref	Mathematical instrument. To measure angles
11	1812	Ewington H	GB	3,566	abr txt	Navigator's sector.
12	1813	Reid W	GB	3,691	abr txt	Trig problems
13	1817	Altena de Campos L C	X	4,114	abr txt	Cosmometer for the longitude
14	1824	Rogers J	GB	4,924	abr txt	Instrument for the cubic contents of standing timber. Uses a number of rods
15	1828	Muller W	GB	5,674	abr txt	Teaching astronomy analog
16	1830	Tyrell J	GB	6,038	abr txt	Method and apparatus for setting sums, for the purpose of teaching some of the rules of arithmetic.
17	1833	Downing S	X	2	Not found	See Martinp58 Machine to compete with Babbage
18	1833	Rowland D	GB	6,528	abr txt ref	Sextants etc.

#	Year	Patentee	Country	Pat Number	Copied	Descr
19	1842	Chesterman J	GB	9,214	Chrono abr txt	Cattle gauge and tapes for measuring & boxes for same.
20	1842	MarstonF	GB	9,235	abr txt	Apparatus for making calculations £ sd Not known to Martin
21	1843	Roth.Dr	FR	9,616	Chrono ref	Sterling Adder
22	1845	Piggott W P	GB	10,625	Chrono abr txt	Mathematical, nautical and astronomical instruments, manufacture
23	1845	Watts & Son Ltd	GB	600,877		Navigation
24	1846	Barnett D as Agent	X	11,441	Chrono	Stylus drive tab calc A S
25	1847	Baranowski J J	FR	11,806	Full txt ref	Ready Reckoner machine see USA
26	1847	Lewthwaite J	GB	11,812	Full ocr Dd	Numbering machine for tickets First patent for a printing Adder
27	1847	Jayet J	FR	11,928	Full txt d	Calculating machine A S M D Arithmaurel See Martin , others
28	1851	Thomas DeColmar C	FR	13,504	Full ocr d ref	Calculating machine. The Arithmometer.
29	1852	Moore J	GB	15,105	abr txt	Spherical trig
30	1854	Scheutz,E	SE	2,216	Ref abr not available	Printing calculator for Tables It did what Babbage failed to do. Patent in Lundgren
31	1855	Newton A V Agent for ?	X	1,236	abr t d	Calculating apparatus.(circular Adder)
32	1855	AmslerJ	CH	2,753	abr txt d ref	Planimeter
33	1856	Saxby S M	GB	1,636	abr t d	Calculating apparatus (for solution of spherical triangles)(for compass errors)
34	1857	Brooman R A as agent for a foreigner	X	361	abr txt d	Cask gauge & calculating table
35	1857	Liegrist M	FR	1,121	Full txt	Box tapes with different marks on the reverse to give cubes, diameter from circumpherence etc. for timber calculations. See also J.C. Watkins, 1887.
36	1857	Fontaine-Moreau, P A, Comte (Agent?)	GB	2,327	abr txt d	Calculating apparatus (for local times
37	1858	Church W	GB	39	abr txt	Rules & machinery to manufacture
38	1858	Rhodes W H	GB	567	abr txt d	Proportional scale - calcs for spinning
39	1858	Newton W E Agent	?	645	abr	Machine for performing the addition of numbers, quantities, or sums of money, Arithmometer.
40	1858	Cressey T S	GB	1,146	abr	Apparatus for calculating wages.
41	1858	Bevan H	GB	1,597	abr txt	Machine for effecting or facilitating arithmetical operations.
42	1858	Cunq L	FR	1,647	abr txt	Circular slide rule with four discs to calculate the volume of liquid flowing through an orifice.

#	Year	Patentee	Country	Pat Number	Copied	Descr
43	1858	Bevan H	GB	2,770	abr txt	Numeric discs in any order on a rod for calculation - not specifically a slide rule with logarithmic scales.
44	1859	Ritchie C	GB	652	abr txt	Adder
45	1859	Dick R	CAN	1,532		An invention for keeping accounts current in printed form, for addressing cards, circulars, papers, and periodicals of all kinds with great rapidity,
46	1860	Ingham & Hinchliffe	GB	200	abr txt d	Circular slide rule for the weight of different warps. Six circular scales
47	1861	Chesnau J R	X	1,300	abr txt	Tables on pen holders
48	1862	Dunlop R	GB	124	sbrtxt	Tab calc for money, weights
49	1863	Maurand A B D	FR	826	abr txt	Calc. Apptus (multiplication cards)
50	1863	Maurice J	GB	1,392	abr txt d	Scales & tables on a sheath on a roller ruler
51	1863	Kimpton	GB	2,882	abr txt d	An apparatus applicable to time, fare, distance and other tables, almanacs, arithmetical calculations, postal and other boxes.
52	1864	Regnault E F & Lambert E A	FR	243	abr txt d	Apparatus for making additions and multiplications of numbers and quantities.
53	1864	Wickham T	GB	1,779		Calculating distances in rifle shooting, and apparatus connected therewith.
54	1864	Bordwine J J	GB	2,895	abr	Calc apptus for longitude & latitude
55	1866	Dean	GB	90	abr txt d	Computing scales for plotting
56	1866	Wallwork T	GB	730	abr txt	Calc apptus for multiplication
57	1866	Rowan & Morton	GB	946	abr txt d	Lat Long
58	1866	Jewsbury J	GB	1,127	abr txt d	Calc apptus (sunrise & sunset
59	1867	Labrousse C D	FR	1,470	abr txtd	Reckoning, counting or calculating apparatus
60	1867	Labrousse C D	FR	3,117	abr txt d	Calcg apptus (counting, voting…
61	1867	Barlow W H	GB	3,506	abr txt d	Circular slide rule for railway calculations - not logarithmic scales.
62	1868	Appleton L	GB	1,103	abr txt d	Calculating interest and apparatus therefor.
63	1869	Ashton W & Storey J H	GB	1,097	No	Steam engine indicator
64	1869	NolanJ P	GB	1,566	abr txt	Range finder and attached slide rule
65	1869	Webb	US	2,382	abr txt ref	The Webb Adder US

#	Year	Patentee	Country	Pat Number	Copied	Descr
66	1870	Sellers J	GB	323	abr txt	Machine for calculations, applicable to weights, measures, time and money. Tab calc
67	1870	Petersson A	NOR	1,246	abr txt	Adder
68	1870	Watkin H S	GB	1,877	abr txt	From the height of the observer and the angle of dip, range can be calculated from a special slide rule.
69	1870	Mcnary W H	US	1,988	abr txt d	Counter, Adder
70	1871	Lefevre H	GB	1,665	abr txt d	Unusual special slide rule.ASMD
71	1871	Sellers & Hopkinson	GB	2,816	abr	Multiplying Tables on cylinders
72	1872	Adams W M	GB	2,379	abr txt d	Calc apptus (solution of triangles
73	1872	BarbourE.D.	US	2,437	abr txt d ref	Calculating machine. First printing device
74	1872	GateuilJ.N.	FR	3,258	abr txt	Calculating apparatus. 6 discs
75	1873	Lanzirotti A G	FR	1,703	abr txt d	Computing scales for finding side of a square eqt to a circle
76	1873	Ludeke J E F	GB	2,892	abr	Proportional compasses to give side of square equal to a circle
77	1874	Pullen M & W	GB	1,948	abr txt d	Calc apptus key driven cogs
78	1874	Martiny J L	FR	2,848	abr txt d	Multiplying figures. Tab calc
79	1874	Burkard A	GB	2,879	abr txt	Product of two numbers sliding plates
80	1875	Nezeraux	FR	1,272	abr txt d	Proportional scales for pricing Tab calc
81	1875	Bolton F	GB	2,177	abr txt	Pricing liquid usage
82	1875	Bottone N	GB	2,361	abr txt	Calculating apparatus. Ten key Adder
83	1876	Penrose F C	GB	1,525	abr txt	Spherical triangles
84	1876	Hill T	US	1,763	abr txt d	Spherical triangles
85	1876	Boucher A E M	FR	4,310	abr txt ref	Boucher watch calculator. The seminal patent.
86	1877	Lea H	GB	785	No	Steam engine indicator
87	1877	Waller J E	GB	1,739	abr txt d	Adding-machine.
88	1877	Coulon, L C	FR	2,274	abr txtd	Weighing machine, pricing
89	1877	Duchamp P	FR	2,436	abr txt	Add Subtract card scorer
90	1877	Sawyer J	GB	2,885	abr txt d	Arriving at results in arithmetic.
91	1877	Hawtrey J P	GB	4,258	abr txt d	Adder stylus bands
92	1878	Dale E R	GB	221	No	Measuring curved surfaces
93	1878	Porter H	GB	334	abr &full txt	Wage calculator using cylinders with tables
94	1878	Scott J C	GB	1,038	abr	Engraving graduations on rules
95	1878	FullerG F	GB	1,044	abr txt d ref	Helical slide-rule .
96	1878	Sawyer J	GB	1,642	abr txt dr	Multiplying strips of paper

#	Year	Patentee	Country	Pat Number	Copied	Descr
97	1878	Sheppard F H	GB	3,059	`	Boxwood slide rule with 2 adjoining slides, reversible or otherwise with decimal or duodecimal scales for timber calculation. Improvements in stock design.
98	1878	HawtreyJ P	GB	3,823	abr txt d	Adder for money Flanged rings
99	1878	Winter D T	US	4,237	No	Measuring and weighing skins
100	1878	Konigsberger	RU	4,724	abr txt d	Calculating-machines.
101	1879	EichensF W	FR	518	abr txt d	Navigation
102	1879	Kellett T W	MAL	582	abr txt d	Portable print Adder
103	1879	Sonnet & Boissier	FR	661	abr txt	Calculating-machinery.
104	1879	Perkins O J	GB	1,584	abr txt	Number of days between two dates
105	1879	Buchan W P	GB	1,853	abr txt d	Callipers, wire gauges, computing scales for thickness of plates
106	1879	Winter D T	US	1,919	abr txt d	Area and weight of skins
107	1879	Restieaux E	GB	2,482	abr txt d	Date calculator using discs
108	1879	Marcet W	GB	2,820	abr txt d	Adding machine. With balls
109	1879	Sonnet & Boissier	FR	3,339	abr txt	Calculatingmachine
110	1879	Lawrie & Howy	X	3,781		Obscure Not allowed
111	1879	Chambon C L	FR	4,131	abr txt d	Days between two dates, strips & plates
112	1879	Stowe L	NZ	4,474	abr txt d	Adder
113	1879	Darling J	GB	4,592	abr txt d	Calendar, Wooden strips in tablet
114	1879	Zarth J H A	DE	4,789	abr txt d	Fraction arithmetical machine, with fractional arithmetics stick.
115	1879	Peichl J	AH	5,045	abr txt d	Mean of two compass readings
116	1879	Darling J	GB	5,113	abr txt d	Effecting and checking addition of numbers.(Mechanical-cogged discs
117	1880	Geny E	FR	2,003	abr txt	Calculating-machines Adding machine to 999, ten levers
118	1880	Durand A N	FR	3,175	abr txt	ASMD by barrels
119	1880	Canale J	FR	4,218	abr txt	Computing volumes Plates & slides
120	1881	Heaton G	GB	258	abr txt	Adder Levers & Discs
121	1881	Fearnley JB.	GB	863	abr txt d	Spiral Cir slide rule
122	1881	Tate S	GB	1,392	abr txt ref	Improvements to 13,504 of 1851-The Arithmometer
123	1881	Canale J	FR	1,427	abr txt d	Contents of cuttings, embankments
124	1881	Beaucourt H	FR	2,441	abr txt d	Adding, wheel with 100 teeth
125	1881	Walford E L	GB	2,875	abr txt	Slide rule for money, goods, stocks and shares.

#	Year	Patentee	Country	Pat Number	Copied	Descr
126	1881	Thomson. J H.	GB	5,540	abr txt	Log-log scales.
127	1882	Sykes & Abbott	GB	102	abr txt	Teaching abacus
128	1882	Harcourt A G V	GB	842	No	Measuring & correcting volume of gases
129	1882	Charpentier page G	FR	2,119	abr txt Ref	Circ slide rule
130	1882	Oginaga	ES	2,457		Position at sea
131	1882	Abdank Abakanowicz B and Roosevelt C	FR	5,519	abr txt d ref	Planimeter
132	1883	Edmondson J	GB	16	abr txt d	ASMD . Plates, - handle
133	1883	Seignon J A	FR	278	abr txt	Tab calc Multiply
134	1883	Hawley G H T	GB	1,158	abr txt d	Calendar calc
135	1883	Nimmo A	US	2,451	abr txt d	Calculating callipers
136	1883	Goodacre S	GB	3,231	abr txt d	Local time
137	1883	Pottin H	FR	3,313	abr txt d ref	Cash register, printing
138	1883	Kelway	GB	3,539	abr txt	Distance of an object from the angles subtended, for ship's use.
139	1883	Fleischauer O	DE	3,590	No	Disc calendar in form of a watch
140	1883	Duschanek K	DE	3,828	abr txt d	Pin wheel
141	1883	Auty J	GB	4,208		Add up cheques by punching holes showing the value in each one
142	1884	Tate S	GB	65	abr txt d	Arithmometer
143	1884	Ram G	IND	2,149	abr txt d	Special slide rule for stability of retaining walls.
144	1884	Raggett J J	GB	4,120	abr txt d	Adding machine nine key
145	1884	Raggett J J	GB	6,074	abr txt d	Adding machine, card with numbers
146	1884	Shaw H S H	GB	6,206	abr txt d	Ratios of angular velocity
147	1884	Shaw H S H	GB	8,391	No	Ratios of angular velocity
148	1884	Chico P P S y	GB	8,582	abr txt d	Elements of stability of a ship
149	1884	Raggett J J	GB	8,689	abr txt d	Modified 4120/1884
150	1884	Sobersides,Dudding & Megson	GB	10,112	abr txt d	Device for navigation
151	1884	Coutinho A J R	POR	10,781	abr xt d	Adding machine nine rod
152	1884	Mayer M	DE	11,566	abr txt d	Adding machine Lever driven wheels
153	1884	Tucker S J	US	12,598	abr txt d	Calculating percentages using movable triangles
154	1884	Breguet S A	FR	15,951	abr txt d	Mariner's compass adjuster
155	1884	Sturgeon J	GB	16,568	No	Integrates vol & pressure of compressed air

#	Year	Patentee	Country	Pat Number	Copied	Descr
156	1885	Matierie	ab	831	abr txt d	On the back of the tape measure is printed a corresponding logarithmic scale for calculations of cubical contents, weights of cattle
157	1885	Trotter A P	GB	1,210	abr txt d	Calculator for wire area calculation from wire gauge.
158	1885	Caws F	GB	5,513	abr txt d	Speed & resistance of ship
159	1885	C. Perks F C	GB	10,465	abr txt d	Calculating apparatus for problems in navigation.
160	1885	CarterW C	GB	13,041	abr txt d ref	Boiler Joint Calculator. Two adjacent slides for calculating of steam boiler and other rivet work.
161	1885	Sawyer Leather Mach Co	US	13,296	No	Planimeter for skins
162	1885	Halsey	US	13,298	abr txt d	ASMD Tab Calc
163	1886	Stanley J W	GB	646	abr txt ref	Adder £sd
164	1886	Claudel F	FR	755	abr txt d	Multiplying by similar triangles
165	1886	Lindholm P T	US	7,974	abr txt d	Adding machine ten key
166	1886	Charpantier J V	US	7,976	abr txt d	Multiplying Tab calc
167	1886	Charpantier J V	US	8,541	abr txt d	Tab calc interest
168	1886	Selling E	DE	8,912	abr txt d	ADD, Multiply by racks and two pantographs Lazy tongs)
169	1886	Claud-Mantel J G	BE	8,984	abr txt d	Apptus for indicator diagrams
170	1886	Watkins J C	GB	12,189	abr txt d	Measuring tape marked on one side with inches, and on the other side with figures for the cubic content of a linear foot of timber having a "quarter girth" shown by the tape.
171	1886	Bousfield G	GB	12,806	abr txt f ref	Linear slide rule for the timber trade.
172	1886	Sutton S H	GB	14,891	abr txt d	Small tab calc
173	1887	Harrison N	GB	1,884	abr txt d	Navigational calculator using three bearing points to calculate.
174	1887	Burt E A P	GB	4,359	abr txt d	Measuring and cubing slide rule, (timber, stone etc.).
175	1887	Hagemann H	DE	5,893	abr txt d	Conversion device,screw
176	1887	Richardson J	US	8,191	abr txt d	Adding machine ten key
177	1887	Maxfield J	GB	10,987	abr txt d	Pocket device for simple multiplication using rollers and strips of paper
178	1887	Lorenz C	DE	11,807	abr txt d	Multiply & divide. Rows of cylinders
179	1887	Boorman J A	GB	13,313	abr txt d	For bevel wheel design
180	1887	Wood W	US	15,676	abr txt d	Calc calendar
181	1887	Bagshaw W	GB	17,962	abr txt d	Steam indicator diagram

#	Year	Patentee	Country	Pat Number	Copied	Descr
182	1888	Mayer M	DE	629	abr txt d	Improve 11,566 of 1884 ten key
183	1888	Skipworth G P	GB	884	abr txt d	Price indicating weighing machine
184	1888	Richard J & F	FR	2,309	abr txt d	Integrating by disc & roller.
185	1888	Salomons Sir D L	GB	3,615	abr txt d	Slide rule for photo exposure
186	1888	Snell & Bathurst	GB	3,679	abr txt d	Tab calc
187	1888	Illgen P	DE	3,744	abr txt d	Adding machine 100 tooth wheel
188	1888	Bahmann G A	DE	3,757	abr txt d	Adding machine
189	1888	Angus G H	GB	4,228	abr txt d	Teaching device , abacus with shutters
190	1888	Hurter F & Driffield V C	GB	5,545	abr txt	Actinograph. Slide rule for calculating photographic exposures.
191	1888	Meire G H	GB	6,227	abr txt d	Slide rule for the ratio of live weight of an animal to the weight of dressed carcase.
192	1888	Cheesman H	GB	6,747	abr txt d	Rotating disc "nomogram" for different calculations.re strength of ropes
193	1888	Moore F C	US	8,217	abr txt d	Adding button slide entry
194	1888	Dunham C M	US	8,648	abr txt d	Interest indicator Sheets on rollers
195	1888	Kelt A	GB	8,720	abr txt d	World Time cylinder
196	1888	Webb C H	US	9,269	abr txt d	Adder like troncet
197	1888	Mudd T	GB	10,311	abr txt d	Watch " calculator with a third "recording" hand.
198	1888	American Arithmometer Co	US	12,121	abr txt d	ASMD in decimal coinage
199	1888	Yates J	GB	12,959	abr txt d	Adding Concentric circular rings
200	1888	Meixell H J	X	13,816	abr txt d	Tab calc dates for interest
201	1888	Felt D E & Tarrant R	US	17,136	abr txt d	Calculating apptus (Comptometer
202	1888	Illgen P C & Kursten P E	DE	18,846	abr txt d	Checking counters of speed, calc machines
203	1889	Hollerith H	US	327	abr txt d	Card tabulator
204	1889	Lane D	GB	476	abr txt d	Indicator diagrams etc
205	1889	Uhlig C E	DE	1,657	abr txt d	Multiplying with rollers, Napier's bones principle
206	1889	Hogan A J	GB	2,425	abr txt d	Planimeter for skins
207	1889	Brooks F W	US	3,853	abr txt d	Coin op age calculator
208	1889	Hayes H	GB	4,071	abr txt d	Tab Wage calculator Cylinders with columns of rates
209	1889	Baron & Harding	GB	6,050	abr txt	Steam engine indicator calculations with an extra slide to calculate horsepower.
210	1889		GB	6,084	abr txt d	Trigonometer

#	Year	Patentee	Country	Pat Number	Copied	Descr
211	1889	Martin C F	GB	7,905	abr txt	Measuring tape with special (logarithmic?) markings, which allows the tape to be doubled over so as to be used as a slide rule.
212	1889	Cuttriss S W	GB	8,285	abr txt Full d	Computer scales on discs and rotary rings rather than on straight rules - Cuttriss Computing Disc?
213	1889	Webb C H	US	8,891	abr txt	Webb Adder
214	1889	Mason J W	GB	9,223	abr txt d	Local times
215	1889	Soennecken F	DE	10,495	abr txt d	ASMD. Flat
216	1889	Drha F	AH	11,194	abr txt	Tab calc for interest
217	1889	Longacre M R	US	11,297	abr txt d	Cash register
218	1889	Michelson M	GB	14,698	abr txt d	Deviation of compasses
219	1889	Bollee M	FR	16,677	abr txt d	Direct ASMD in decimal machine
220	1889	Young J H	GB	17,153	abr txt d	Linear slide rule with two adjacent slides for calculation of timber, masonry, stonework etc.
221	1889	Brotherhood R	GB	20,088	abr txt d	Trig problems
222	1890	Maskelyne J N	GB	76	abr txt d	Cash register, printing
223	1890	Plechawski E	AH	139	abr txt d	Universal time indicator
224	1890	Trotter A P	GB	1,302	abr txt d	Slide Rule for electrical calculations with 2 slides - "Wiring Slide Rule".
225	1890	Watkins A	GB	1,388	abr txt d	Tubular exposure time slide rule around a densinometer with an eyepiece.
226	1890	Honeysett .& Stanley	GB	4,803	abr txt	Log scales which give the flow of liquid in pipes. Provided with a transparent courser (sic).
227	1890	Goodman J	GB	6,087	abr t d ref	Improve Stangs planimeter
228	1890	Witter E E	US	6,327	abr txt d	Nine key Adder
229	1890	Sharpe J	CAN	8,762	abr txt d	arithmometer/Adder
230	1890	Stone F G	GB	9,333	abr txt d	For fort artillery
231	1890	NCR	US	9,369	abr txt d	Cash register
232	1890	NCR	US	9,370	No	Cash register
233	1890	Crauford J J W	GB	10,314	abr txt d	Circular slide rule for railway cuttings and curve calculation.
234	1890	Meire G H	GB	11,493	abr txt d	Two sided metal slide rule indexes with chisel edges formed from a pair of blanks by bending and interlocking. The whole is held together by an elastic band which does not press the unit against the stock.

#	Year	Patentee	Country	Pat Number	Copied	Descr
235	1890	Fowler G B	US	13,012	abr txt d pic	Stylus drive adding mach
236	1890	Beher O	DE	13,538	abr txt d	Arithmometer
237	1890	Wesley E A	GB	13,550	abr txt d	Sterling Adder
238	1890	Odhner W	RU	13,700	abr	Arithmometer
239	1890	Rumble H H	GB	14527	abr	Sterling Adder
240	1890	Rumble H H	GB	14,527		Adding Machine Key lever. Farthings
241	1890	Guthrie J	GB	15,062	abr	Adding machine Slides
242	1890	Stone F G	GB	15,978	sbr txt d	Range finder
243	1890	Craig D I	US	16,882	abr txt d	Adder
244	1890	Stone F G	GB	19,824	abr txt d	Artillery ranging
245	1890	Felt & Tarrant	US	19,964	abr txt d	Adding & receipts
246	1890	Nelson J	GB	20,681	abr txt d	Adding sterling 3 circles
247	1891	Goodman J	GB	407	abr txt d ref	Planimeter
248	1891	Poynter J B	NZ	1,285	abr txt	Percentages etc using transversals
249	1891	Hart H C	US	1,479	abr txt d	Multiplying low limits mechanically
250	1891	Watson A J	GB	1,676	abr txt d	Military "cover" calculator using a two foot, two fold rule with a plotting table to calculate the cover provided by a berm.
251	1891	Hett C L	GB	6,680	abr txt d	Linear A/B,C/D scales for horsepower and transmission belting size calculation.
252	1891	Matsson E E	SE	7,346	abr txt d	Add & Multiply telescoping cylinders
253	1891	Garner D A	GB	10,382	abr txt d	Adding machine
254	1891	Glover T R	GB	10,814	abr txt d	Multiplying celluloid strips part prods
255	1891	Smith J C	GB	12,101	abr txt d	Slide rule for navigation: A = logcosec and height/angular distance; B = miles .
256	1891	Sawyer J	GB	16,088	abr txt	Multiply by type writers, partial prods
257	1891	Kreuffel & Esser	US	16,939	abr txt d	Keuffel & Esser Co. Two sided slide rule.
258	1891	Little E de L	GB	17,175	abr txt enter d	Convert quantities
259	1891	Milne S	ab	17,794	Hopp	Slide rule with 2 adjacent slides. Patent never issued.
260	1891	Blackshaw J E & Rogers G H	US	19,474	abr txt d	Adder Rings
261	1891	Salomon D	GB	22,630	abr txt d	Ticket issuing device
262	1892	Timmis & Bell	GB	653	abr txt d	Add columns
263	1892	Brotherhood R	GB	983	abr txt d	Range finder by similar triangles

#	Year	Patentee	Country	Pat Number	Copied	Descr
264	1892	Meyer G	AH	3,062	abr txt	Ribbons on rollers allowing calculation of days and interest accrued.
265	1892	Layton C E & E J	GB	3,307	abr txt d	Adder rotary disc
266	1892	Salomon D	GB	4,279	abr txt d	Printing Adder for receipts
267	1892	Wesley E A	GB	5,834	abr txt d	Adder disc and style
268	1892	Swan D LC	GB	10,896	abr txt d	Proportional key levers
269	1892	Oakes & Jackson	US	12,966	abr txt d	Adder
270	1892	Prinsep D G	GB	13,915	abr txt	Circular slide rule for range-finding and triangulation calculations.
271	1892	Huizer S L	X	13,942	abr txt	Adder
272	1892	Frampton E	GB	14,358	abr txt d	Sophisticated circular slide rule for calculating wages. Uses a spiral scale.
273	1892	NCR	US	16,404	No	Cash register
274	1892	Goold W T	GB	16,807	abr txt d	Design for a slide rule with a second slide fitted with pointers for use to mark intermediate values and constants.
275	1892	Manners C	GB	16,846	abr txt	Logarithmic numbers on the reverse of a measuring tape. to calculate square and cubical quantities
276	1892	Lovering J G	GB	17,514	abr txt d	Calc apptus for surveying or navigation
277	1892	Scott J A	GB	17,642	abr txt d	With the Britannia Works Co. Photographic exposure circular slide rule.
278	1892	NCR	US	18,201	No	Cash register
279	1892	Human E	Ceylon	18,237	abr txt d	Sheets for plotting
280	1892	Wilcox R	GB	18,423	abr txt d	Ready reckoner Tab calc
281	1892	Hearn M	GB	18,545	abr txt d	Adding key lever
282	1892	NCR	US	18,649	No	Recording Cash register
283	1892	Higgins L R	GB	20,323	abr txt d	Convert values of exchange Board triangles
284	1892	Lundberg G	US	21,210	enter	Weighing and price scales
285	1892	Timmis & Bell	GB	21,420	abr txt d	Ten key Adder
286	1892	Lord L	GB	22,210	Full t d ref	Circular slide rule for calculation in the textile industry. Lord's Calculator.
287	1892	Salomon D	GB	22,445	abtxt d	Deliver money & calculate
288	1892	Boemermann G	US	22,960	No	Cash register
289	1892	Richmond G	US	23,538	abtxt d	Calculating & Cash registers
290	1893	Oliver N	Goa	351	abr txt d	Lat & Long discs

#	Year	Patentee	Country	Pat Number	Copied	Descr
291	1893	Baker E	GB	675	abr txt d	Ship to shore distance
292	1893	Plumb F	GB	763	abr txt d	Lace test calculator
293	1893	Wollstenholme T	GB	764	sbr txt d	Tab calc roll pricing
294	1893	BrennandW & W E	GB	1,729	sbr txt d	Draw link motion curves
295	1893	Burt E A P	GB	3,551	No	Slide rule No 101 for calculating timber and transport costs
296	1893	Wiberg K E & Berndes G F	SE	6,546	abr txt d	Adding machine
297	1893	Falletti E	IT	6,782	abr txt d	Solve triangle
298	1893	Webb C H	US	7,633	abr txt d	Adding, strips of paper on rollers
299	1893	NCR	US	9,191	No	Cash register
300	1893	Phillips B H	US	9,769	abr txt d	Adder key driven
301	1893	NCR	US	10,213	No	Cash register
302	1893	Gleason A	US	10,230		Local time
303	1893	Wynne G F	GB	10,617	abr txt d	Photographic slide rule with separate actinometer.
304	1893	Rusett E W	GB	13,293	abr txt d	Ship's constants
305	1893	Travis C L	GB	14,342	abr txt d	Change indicator Tab calc
306	1893	Watkins A	GB	14,364	abr txt d	Photo exposure cylinder
307	1893	Glover T R	GB	15,113	abr txt d	Multiply strips
308	1893	Sharp A	GB	16,350	abr txt d	Fourier harmonic analyser
309	1893	American Arithmometer Co	US	17,126	abr txt d	Adder
310	1893	NCR	US	18,052	No	Cash register
311	1893	Sharp A	GB	18,299	abr txt d	apptus for Fourier expansion
312	1893	Steiger O	DE	20,968	abr txt d	ASMD early version, not the millionaire
313	1893	Dufresne Z	FR	21,623	abr txt d	Tab calc ten cylinder
314	1893	Watkins A	GB	23,894	abr txt d	Photographic timing Clock & circular rule
315	1893	Niven G	GB	25,073	abr txt d	Stylus Adder
316	1894	Travis C L	US	1,034	abr txt d	Date calculator Bands
317	1894	Hanmer H H	GB	1,423	abr txt d	Tab calc for cotton prices
318	1894	Grimme Natalis	DE	2,318	abr txt d	Receipts checking & recording
319	1894	Savage R W	GB	3,701	abr txt d	Photographic exposures Spiral slide rule
320	1894	Kjellstrom J	SE	5,060	abr txt	Tape measure weight calculator animal
321	1894	Parker W J A & J	GB	5,489		Gauge with log scale, for depth of hole
322	1894	Hopkins WW	US	6,193	abr txt d	A S
323	1894	Nichols W K	US	6,220	abr txt d	Key driven Adder
324	1894	Bosanquet C J	GB	6,826	abr txt d	Pocket slide rule

#	Year	Patentee	Country	Pat Number	Copied	Descr
325	1894	Hollerith H	US	8,101	abr txt d	For statistics
326	1894	Wolfe J C	US	8,496	abr txt d	Adder for typewriters
327	1894	Phillips W H	GB	8,515	abr txt d	Slide rule Photographic exposure 2 slides
328	1894	Watson TH	GB	9,900	abr txt d	Double slide rule for displacement etc of Ships
329	1894	Babbage H P	GB	10,399	abr txt d	Add up to £1000
330	1894	Esser H	DE	10,512	abr txt d ref	Multiply & divide
331	1894	Beehler W H	US	10,916	abr txt d	Compass error
332	1894	Johnstone G	GB	11,173	abr txt d	Ship's metacentre
333	1894	Shakespeare J	GB	12,615		Adder Cash register
334	1894	Colby C K	US	12,664	abr txt d ref	Speed calculator on watch
335	1894	Stanley & Amsler	GB	13,567	abr txt	Planimeter for shrunk plans
336	1894	Carey S	GB	13,855	abr txt d	Nautical Course indicator
337	1894	Thomson G	GB	14,453	abr txt d	Book-form Napier's bones see 2885 of 1877 Sawyer
338	1894	Yule G U	GB	14,928	abr txt d	Harmonic analyser
339	1894	Pryce- Brown P	GB	16,090	abr txt d	Indicator diagram
340	1894	Rafferty W C	US	17,110	abr txt d	Artillery range finder
341	1894	Little W G & C W G	GB	17,575	No	Steam engine indicator
342	1894	Hollerith H	US	17,738	abr txt d	Punched card machine
343	1894	Browning G	GB	21,558	abr txt d	Adding Uses tubes and balls
344	1894	Victor Cash Register Co	US	21,834	abr txt d	Cash register
345	1894	Connet & Jackson	US	22,431	No	Liquid meter
346	1894	Gillman G	ES	23,024	abr txt d	Diagram for stadia measurements
347	1894	Bundy Mfg. Co	US	23,243	No	Tell tale
348	1894	Scurfield G	GB	24,553	abr txt d	Circ slide rule,-trig scales
349	1894	Watkins A	GB	25,000	abr yxt d	Watch type photographic exposure
350	1895	KuttnerW	DE	621	abr txt d	Machine to multiply
351	1895	Wise E W	US	678	abr txt d	Ready reckoner attached to weighing machine
352	1895	NCR	US	1,483	No	Cash register
353	1895	Pickworth C N	GB	2,166	abr txt d	SR To determine the cost of woven fabric.
354	1895	Wallis E J	US	3,186		Planimeter indicator diagram
355	1895	WimshurstJ & K C	GB	3,523	No	For trimming a ship Uses tubes of liquid
356	1895	Eagles J	GB	3,937	abr txt d	Helical slide rule
357	1895	Schneider E	DE	4,364	abr txt d	Tables on rollers for multiplying
358	1895	Denny & Gray	GB	6,640	abr txt d	Ship's metacentre
359	1895	Lacoste A L	US	7,647	abr txt d	Trig problems

#	Year	Patentee	Country	Pat Number	Copied	Descr
360	1895	Schaer A	US	7,737	abr txt d	Slide rules for textile fabrics
361	1895	NCR	US	9,098	No	Cash register
362	1895	Norris T	US	10,583	abr txt d	Circular slide rule
363	1895	Schaer A	US	10,830	abr txt d	Slide rules for textile fabrics
364	1895	Hillhouse P A	GB	11,074		Planimeter
365	1895	Tolton J P	US	14,347	abr txt d	Planimeter for leather
366	1895	Fortin J E	CAN	15,961	abr txt d	Planimeter for leather
367	1895	Bundy Mfg Co	US	16,914	No	Time clock for workmen
368	1895	Holt PWM	NZ	19,047	abr txt d	Solve right triangles
369	1895	Overell M J	ab	19,694	No	Days between dates
370	1895	Stewart C E	CAN	22,240	abr txt d	Tab Computing tables for wages
371	1895	Rogers G H	US	23,151	abr txt d	Adding machine,discs
372	1896	Koechlin A	DE	835	abr txt d	World time discs
373	1896	Hughes G R	GB	1,355	No	Measure line of print
374	1896	Belshaw R	GB	3,281	abr txt d	Slide rule for the quantity in partly filled casks.
375	1896	Dudley G W	US	3,702	abr txt d ref	A S Type writer
376	1896	Runge E	DE	4,425	abr txt d	Mech Adder
377	1896	Ramage A G	DE	4,982	abr txt d	Ship stability
378	1896	Vetch G A	GB	5,741	abr txt d	Adding with slides or rotary discs using pegs
379	1896	NCR	US	13,832	No	Cash register & arithmometer
380	1896	M.J. Sheridan M J	GB	14,623	abr txt d	Slide rule for diluting spirits
381	1896	Coleridge G J D	GB	14,645	abr txt d	Subtracting sterling
382	1896	NCR	US	16,725	No	Cash register
383	1896	Glendinning A	GB	18,749	abr txt d	Calc day of week
384	1896	Montforts A	DE	20,507	abr txt d	Counter Adder
385	1896	Felt & Tarrant	US	20,990	abr txt d	ASMD Print
386	1896	Hafen J	DE	21,938	abr txt d	Calc calendar
387	1896	Hickling W E	GB	21,996	abr txt d	Computing scale disc
388	1896	Lippincott A C	US	22,193	abr txt d	Planimeter for indicator diagrams
389	1896	Simmons N	GB	23,733		Scales on pressure/ temp dials
390	1896	NCR	US	24,452	No	Cash register
391	1896	McPherson J A	GB	24,616	abr txt d	Slide rule- , Water over weirs
392	1896	Bright T	GB	27,509	No	Calliper for screw cutting
393	1897	Marshall H	US	1,481	abr txt d	Type writer & Adder
394	1897	W echsler B	GB	3,276	No	Perpetual calendar
395	1897	Rochester Cash Reg Co	US	6,192	No	Cash Register

#	Year	Patentee	Country	Pat Number	Copied	Descr
396	1897	Rochester Cash Reg Co	US	6,193	No	Cash Register
397	1897	Rochester Cash Reg Co	US	6,194	No	Cash Register
398	1897	Tanaka S	DE	8,723	abr txt d	Adding , Nine -Key
399	1897	Heithersay J S	AU	8,786	No	Calendar on bands
400	1897	Myers D	US	9,068	abr txt d	Computing scale for spring balance
401	1897	Goodwin H	GB	9,585	abr txt d pic	Computing scales for printers
402	1897	Computing Scale Co	US	9,870	abr txt d	Computing scales
403	1897	Hiett de K J T	US	9,872	abr txt d	Multiply & print
404	1897	Franke A	DE	9,997	abr txt	Add print £sd
405	1897	Smith A	NZ	10,160	abr txt	Tab calc price length
406	1897	Franke A	DE	10,170	abr txtd	Add print £sd
407	1897	Naish R	GB	12,347	abr txt d	Percentages mechanically, scaled lines
408	1897	American Arithmometer Co	US	12,730	No	Print mechanism
409	1897	Maybaum L	US	17,366	abr txt d	Add, Sub, Mult. Rotary disc with 500 teeth
410	1897	Schabadt A	RU	20,998	abr txt d	Adding using endless bands
411	1897	American Arithmometer Co	US	21,268	No	Printing attachment
412	1897	Oswald R F	DE	22,028	abr txt d	Computing scales on legs of pair dividers Like Sector
413	1897	NCR	US	22,154	No	Cash register
414	1897	Smith R C	US	24,078	abr txt d	slide rule protected by transparent plates
415	1897	Sandeman & Brown	GB	24,363	No	Justifying mechanism for Monotype
416	1897	Fauvel & Collins	GB	25,241	abr txt d	£ s d Adder
417	1897	Bundy Mfg. Co	US	28,207	No	
418	1897	Little & Little	GB	29,199	No	Steam engine indicator with integrating wheel
419	1898	Duncan E	US	1,410	sbr txt d	Computing scales
420	1898	Kirby E B	US	1,979	No	Type writer calc
421	1898	Kirby E B	US	1,980	No	Type writer calc
422	1898	Usill G W & Browne F J	GB	4,133	abr txt d pic	Trig demonstrator
423	1898	Mees A B	GB	5,963	abr txt d	Value-indicating weighing apparatus
424	1898	Szenhak S	RU	7,004	abr txt d pic	Tab calc
425	1898	Roland F	ZA	7,647	No	Days between dates,disks
426	1898	Clifford C C	US	8,542	abr txt d	Add Mult Print
427	1898	NCR	US	8,678	No	Adder printer
428	1898	Tray & Sledding	US	9,331	abr txt d	Prop dividers to calculate

#	Year	Patentee	Country	Pat Number	Copied	Descr
429	1898	American Arithmometer Co	US	9,600	No	Key lock
430	1898	Bundy W Le G	US	9,990	abr txt d	Adder printer
431	1898	Beyer & Bertram	DE	10,884	No	Measures of length & computing scales for areas etc
432	1898	Elsdon C H	GB	11,034	abr txt d	Calendar disc tab calculator
433	1898	Cheape J A	US	12,025	abr txt d	Device for photo exposure
434	1898	Milne G	GB	12,787	abr txt d	Calendar disc tab calculator
435	1898	Butterfield E A	GB	13,416	abr txt d	Calc time table
436	1898	Fassbender F	AH	14,200	abr txt d	Mech disc calendar w& lunar phases
437	1898	Kirby S R	US	14,207	abr txt d	Great circle navigator
438	1898	Rizzoli L	IT	14,535	abr txt d	Slide rule for tacheometry
439	1898	Levi M	DE	14,635	abr txt d	Computing scale Length area
440	1898	Runge E	DE	16,214	abr txt d	Adder printer
441	1898	Cotterell M B	GB	19,824	abr txt d	Slide Card for batteries
442	1898	Jobson G	GB	19,970	abr txt d	Tiny Tab calc
443	1898	Bayldon & Armstrong A H	GB	24,761	abr txt d	Apptus for ship's bearings
444	1898	Drake W A	US	25,180	abr txt d	Ready Reckoner type multiplier
445	1898	Watkins A	GB	26,281	abr txt d	Device for photo exposure
446	1898	Universal Calculator Co)	US	26,925	abr txt d	Calculating printing
447	1898	Horvath A	HU	27,261	abr txt d	Mult Div Napier's bones
448	1898	Buell S A	US	27,378	abr txt d	Calc calendar on bands
449	1898	NCR	US	40,936	No	Cash register
450	1899	Froom G B	GB	692	abr txt d	Abacus for sterling
451	1899	Lafond G	FR	2,195	abr txt d	Adding Wheels & stylus £sd
452	1899	Payne A E H	GB	3,675	abr txt d	Circular tables read through slots Tab calc Insurance premiums
453	1899	O'Brien & Browning	GB	3,761	abr txt d	Adding using balls in tubes See 21558/1894
454	1899	Fossa-Mancini C.	IT	4,489	abr txt d	Adder, stylus driven cylinder
455	1899	Fyffe W	GB	4,783	abr txt d	Ready reckoner disc wages
456	1899	Brown J L	AU	4,817	abr txt d	Length measure & fractions
457	1899	Farini P	IT	5,088	abr txt d	Drawing square
458	1899	Dunn & Harrison	US	9,118	abr txt d	Computing weighing apparatus
459	1899	Kavanagh E	GB	9,302	No	Records area of sawed boards
460	1899	Tregoning C	US	10,055	abr txt d	2 disksT ab Calc
461	1899	Goldman H	US	10,237	abr txt d	Chain Adder
462	1899	Powles H H P	GB	10,278		Calculating calliper gauge
463	1899	Halladay L P	US	10,287	abr txt d	Computing weight and value
464	1899	Day A J	AU	11,767	abr txt d	Local time discs

#	Year	Patentee	Country	Pat Number	Copied	Descr
465	1899	Linzel C	DE	12,289	abr txt d	Bending moments of girders
466	1899	Hoch A	US	14,945	abr txt d	Add-Print
467	1899	Goudie J W	GB	15,527	abr txt	Slide rules for engine calculations (Poly slide)
468	1899	Wilkinson, Gibson & Reiss	GB	17,306	abr txt d	Adder , watch case type £sd
469	1899	Smith R H	GB	17,357	abr txt d	Professor R.H. Smith's tubular calculator, sold by J.H. Steward.
470	1899	Union Type writer Co	US	17,651	abr txt d	Adding typewriter
471	1899	Garratt J H	US	18,427	No	Time checking workmen
472	1899	Farmar F C	GB	19,288	abr txt d	Sde rule for computing and calculating
473	1899	Farmar F C	GB	19,289	abr txt d	Dip rod
474	1899	Grantham A M	US	20,218	abr txt d	Gauge & Tab calc for paper sheets
475	1899	Aubry P O	ab	22,353	abr txt d	Slide rule attached to surveying instrument Solves a trig equation
476	1899	Schwarz G & R	AT	22,566	abr txt d	Types & totals columns of figures
477	1899	March L R	FR	22,698	abr txt d	Add print columns
478	1899	Hall & Kay	GB	25,715	abr txt d	Correct hygrometers for temperature
479	1900	Heinitz W	DE	336	abr txt d	Types & totals columns of figures
480	1900	Pheils I F	ab	548	abr txt d	Local times
481	1900	Richter O	DE	734	abr txt d	Combined planimeter pantograph
482	1900	Harrison W J & I G	GB	1,674	abr no d	Measuring tape for range finding
483	1900	Thomas J	AU	3,276	abr txt d	Drum table reckoner
484	1900	Kirby E B	US	3,541	abr txt d	Keyboard mechanism
485	1900	Maule E H	GB	3,781	abr no d	Almanacs & money tables on cuff protector
486	1900	Steiger A W	US	3,842	abr txt d	Calc calendar
487	1900	Stimpson W F	US	5,013	abr txt d Pic	Price scales
488	1900	Dohm W	DE	5,142	abr txt	Calc section of beams
489	1900	Mallmann J	US	5,322	abr txt	Adder stylus set
490	1900	Claassen H	DE	5,518	abr txt	Vacuum gauge for crystallisaion
491	1900	Watkins A	GB	5,737	abr txt	Slide rule photo exposure
492	1900	Shattuck W P	US	7,172	abr txt	Keyboard Adder printer
493	1900	RipperW	GB	7,324	abr txt	Steam engine indicator with slide rule
494	1900	Smith& Cruickshank	US	7,579	abr txt d	Slide rule with mechanism for decimal point see 24078/1897
495	1900	Smith M V	GB	8,793	abr txt d	Day date calc
496	1900	Jacolin P	FR	8,888	abr txt d	Measure length, angle, slide rule
497	1900	National Addograph Co	US	9,811	abr txt d	Type writing computing machine

#	Year	Patentee	Country	Pat Number	Copied	Descr
498	1900	Numerograph Mfg Co	US	10,070	abr txt d	Printing Adder
499	1900	Frydmane J	FR	10,310	abr txt d	Printing Adder
500	1900	National Computing Scale Co	US	10,622	enter	Computing weighing scales
501	1900	Empire Cash Register & Collins N	GB	10,904	abr txt d	Cash Register Printing £sd
502	1900	Des Jardins B M	US	11,414	abr txt d	Type writer calculator
503	1900	Chow Ling Shang	CHI	12,875	abr txt d	Mult & Div , tapes with numbers, like bones
504	1900	Haack P	DE	13,094	abr txt d	Multiplying stepped teeth (See German pats)
505	1900	Muirhead & Edgar	GB	13,199	abr txt d	Locating with X-Rays
506	1900	Rinsche F C	US	13,316	abr txt d	Adder printer
507	1900	Vermehren J	DK	13,817	abr txt d	Multiply by logs, spindles & discs
508	1900	Demuth J A	US	13,977	No	Tell tale
509	1900	Dennis A S	US	15,709	abr txt d	Adder printer
510	1900	Hagey R J	US	16,075	abr txt d	Slide rule type device for photography
511	1900	Russell Millard & Biggar	CAN	18,151	No	Cash register
512	1900	Poliakoff J	RU	18,358	abr txt d	Photography
513	1900	Hunt J	GB	19,018	abr txt d	Calendar on disc
514	1900	Watkins A	GB	19,331	abr txt d	Exposure calculator with slide rule
515	1900	Felt D E	US	19,675	No	Adder for £sd
516	1900	Trinks F	DE	19,762	abr txt d	Calculate & Print
517	1900	Landing L M	US	22,951	abr txt d	Solve interest & dates Mechanical discs
518	1900	Forster A	GB	23,256	abr txt d	Slide rule-Gravet type for steam pressure
519	1900	Trinks F	DE	23,606	abr txt d	Registering & adding
520	1900	Jennings R L	GB	23,627	abr txt d	Circular slide rule for timber trade
521	1901	Reid & Blakey	GB	951	abr txt d	Ready Reckonersheet on board for wages
522	1901	Labofish C S	US	1,736	abr txt d	Typewriter calculating attachment
523	1901	Briggs I	GB	1,828	abr txt d	Pocket money- Adder
524	1901	Proell R	DE	2,516	abr txt d	Log computing scale, repeated, two plates
525	1901	NCR	US	2,942	No	Cash register
526	1901	NCR	US	2,943	No	Cash register
527	1901	Acworth J J	GB	3,873	abr txt d pic	Imperial Exposure Meter (actinometer) with slide rule.
528	1901	Pantsar K	RU	4,011		Counting & adding £ s d
529	1901	Roberts J	GB	4,121	abr txt d	Price of gas consumed tab calc rollers

#	Year	Patentee	Country	Pat Number	Copied	Descr
530	1901	Bryan B W	GB	5,252	abr txt d	Planimeter for varying scales
531	1901	Farmar F C	GB	8,309	abr txt d	Slide rule for all calculation purposes in connection with wines and spirits.
532	1901	Roegner G	US	8,910	abr txt d	Tab calc for wages
533	1901	Moynihan E J	GB	9,409	abr txt d	Adder for £sd dials
534	1901	Hollerith H	US	10,502	abr txt d	Totals under heads
535	1901	Ashton W	GB	10,780	No	Steam engine indicator
536	1901	Trinks F	DE	10,872	abr txt d	Control speed of calculator
537	1901	United ShoeMach Co	US	11,001	abr txt d	Area of fabrics
538	1901	Caron PJ E	FR	11,928		Slide rule in tool handles
539	1901	Grimme Natalis	DE	12,590	No	Pinwheel
540	1901	Mallmann J	US	15,444	abr txt d	Printing Adder
541	1901	Turck J A	US	16,273	abr txt d	Key Adder
542	1901	Schneider A & Perfler J	US	18,604	abr txt d	Adding printer
543	1901	Tattersall H P & Pickard G A	GB	18,631	abr txt d	Circular Slide rule for exposures
544	1901	Hollerith H	US	19,372	abr txt d	Statistics
545	1901	Hopkins W W	US	20,133	abr txt d	Adder
546	1901	Langhorne JT	US	20,562	abr txt d	Columnar adding on type writer
547	1901	Whitehead E A	AU	22,214	abr txt d	Registers piston activity
548	1901	Perry, John, Prof	GB	23,236	abr txt d ref	Re-invention of log-log scales as on A.G. Thornton's Perry slide rule.
549	1901	Dudgeon H A	GB	23,858	abr txt d	Irregular areas
550	1901	Dunlop H C	GB	23,886	abr txt d	Reduce friction in slide rules
551	1901	TempletonW G	US	24,199	abr txt d	Computing scale for cheese
552	1902	Hagyi-Rustic & Duffek	AT	1,679	abr txt d	Curious device of cubic blocks
553	1902	Borner F	DE	2,104	abr txt d	Tab calc multiplier
554	1902	Fairchild C	US	2,130	abr txt	Cash register
555	1902	Hultman I & Johanson A M	SE	3,745	abr txt d	ASMD machine
556	1902	Smith H A	US	3,991	abr txt d	Hand Adder
557	1902	NCR	US	4,159	No	Cash register
558	1902	Dees MA	US	4,772	abr txt	Computing weighing scale
559	1902	Lock Pollen & Barr	GB	6,838	abr txt	Solve triangles
560	1902	Hoch A & Wendling G X	DE	7,289	abr txt d	Adding apparatus for type writers
561	1902	Hoch A & Wendling G X	DE	7,290	abr txt d	Adder printer
562	1902	Wallich C A N	GB	7,347	abr txt d	Bridge game scorer
563	1902	Krause R	DE	7,571	abr txt d	Slide rule with nonius
564	1902	Muntz W E	GB	9,227	abr txt d	English to metric lengths
565	1902	Roegner	US	9,314	abr txt d	Wage calculator Rotary drum

#	Year	Patentee	Country	Pat Number	Copied	Descr
566	1902	Schuster E	DE	9,797	abr txt d	Adder see- 4724/1878
567	1902	Wolfe& Morton	US	9,892	abr txt d	Add columns on type writers
568	1902	Kluge A	DE	10,985	abr txt d	Adder
569	1902	Union Type writer Co	US	11,587	No	Add columns type writer
570	1902	Piierce G P	AUS	11,995	abr txt d	Circular Adder
571	1902	Masera S	CH	13,957	abr txt d	Slide rule scale on endless band
572	1902	Wilson E	GB	14,533	abr txt d	Watch type calculator The Halden calculex
573	1902	Goldberg H E	US	15,775	abr txt d	Adding attachment to typewriter
574	1902	Goldberg H E	US	15,776	No	Amend 15775
575	1902	Hartmann S & Hausler E	DE	15,939	abr txt d	Wheels & counting train
576	1902	Crosley W	SR	15,959	abr txt d	Calculator for m/nth part of a number, uses cones
577	1902	Rechnitzer A	AH	16,049	abr txt d	ASMD
578	1902	Lowdon A H	GB	16,890	abr txt d	Computing scale for screw propellers
579	1902	Garrigues P	FR	17,008	abr txt d	Gauge to measure heaps of stones
580	1902	Hoch A & Wendling G X	US	17,290	abr txt d	Printing column Adder
581	1902	Collins N	GB	18,562	abr txt d	Card multiplier using arcs Tab calc
582	1902	Howieson J T & Spiekerman F	US	18,853	abr txt d	Calculator attached to typewriter
583	1902	NCR	US	19,177	No	Cash register
584	1902	Seger B	DE	19,515	abr txt d	Adder discs
585	1902	Fairchild C	US	20,201	abr txt	Adder
586	1902	Wales C	US	21,178	No	Adder See US patents
587	1902	Seaton - Snowdon F	GB	21,963	abr txt d	Solve triangles
588	1902	Fregoso T	MEX	23,275	abr txt d	Solve triangles
589	1902	Thomson & Petri	DE	23,913	abr txt d	Area of leather etc.
590	1902	Heinitz W	DE	24,140	abr txt d	Adder tens transfer
591	1902	Postans A J	GB	24,868	abr txt d	Key lever adding machine Pic
592	1902	Callender's Cable	GB	24,944	abr txt d	Adder
593	1902	NCR	US	25,961	No	Cash register
594	1902	Watkins A	GB	27,822	abr txt d pic	Slide rule for photo exposure
595	1902	NCR	US	27,908	No	Cash register
596	1902	Shattuck Mfg Co	US	28,737	abr txt d	Adder,
597	1902	Shattuck Mfg Co	US	28,739	abr txt d	Adder stylus
598	1903	Lotterhand J C	US	355	abr txt d	Full key board Adder
599	1903	Bundy Mfg Co	US	409	abr txt d	Adding printer

#	Year	Patentee	Country	Pat Number	Copied	Descr
600	1903	Glaser W H	GB	487	abr txt d	Slide rule for cloth calculations- two slide
601	1903	Frost L L	US	1,689	abr txt d	Tallying deviceCheque book balancer £sd
602	1903	Magne F L	FR	2,484	abr txt d	Teaching arithmetic ASMD cylinders
603	1903	Pike W H	US	3,259	abr txt d	Adding printer
604	1903	NCR	US	4,093	No	Cash register
605	1903	Hallwood H S	US	4,543	No	Cash register
606	1903	Weston R E	GB	5,387	abr txt	Adder for bridge scoring
607	1903	Low D A	GB	6,049	abr txt	Slide rule with celluloid
608	1903	NCR	US	6,104	No	Cash register
609	1903	Lord E & W	GB	7,081	abr txt d ref	Circular rule for fabrics
610	1903	NCR	US	7,522	No	Cash register
611	1903	Clowes	GB	7,635	abr txt d	Rotary discs for betting
612	1903	American Mechanical Cashier Co	US	8,882	abr txt d	A S money to make change
613	1903	Anderson F J	GB	9,095	abrtd Fulltd Ref	Splitting of log-log scales into 4 portions
614	1903	Donlevy J P L	GB	9,725	abr txt d	Reduced key board Adder
615	1903	Universal Accountant Machine Co	ab	9,858	abr txt d	Adder printer
616	1903	Caink T	GB	9,975	abr txt d	Apportioning costs prop scale
617	1903	Maybaum L	US	10,187	abr txt d	Adder for type writer
618	1903	Faber A W	DE	10,230	abr txt d	Faber's earliest UK patent.
619	1903	Raymond-Barker E	GB	12,434	abr txt d	Device for graphical methods
620	1903	NCR	US	12,981	No	Cash register
621	1903	Berggren P	SE	13,800	abr txt d	Adder with ratchet key entry
622	1903	Muller A	DE	14,330	abr txt d	Calc machine
623	1903	NCR	US	15,513	No	Cash register
624	1903	NCR	US	15,851	No	Cash register
625	1903	Edwards RWK	GB	16,042	abr txt d	Calc area transparent sheet
626	1903	Frichette L	US	16,592	abr txt d	Scale for roof rafters
627	1903	Lange J E & Moe A T	NOR	17,201	abr txt d	Indirect key adding
628	1903	Hadrich R, Lamertz F, & Dreckmann	DE	18,296	abr txt d	Adding machine
629	1903	Bremer H	DE	18,538	abr txt d	Multiplying table frame tab calc
630	1903	Kelling K	DE	19,870	abr txt d	Multiplying with second keyboard
631	1903	American Arithmograph Co	US	20,422	abr txt d	Adder typewriter printer
632	1903	Dey A & J	GB	20,845		Time recorder Cash register
633	1903	NCR	US	21,213	No	Cash register
634	1903	Bright G E	US	21,646	abr txt d	Calc irregular areas
635	1903	NCR	US	21,678	No	Printing Cash register

#	Year	Patentee	Country	Pat Number	Copied	Descr
636	1903	NCR	US	21,679	No	Printing Cash register
637	1903	Frere R T	US	21,832	abr txt d	Sun dial
638	1903	Pugh E OC	GB	21,935	abr txt d	Trig device
639	1903	Anderson F J	GB	22,762	abr txt d	Spiral slide rule
640	1903	Selling E	US	23,737	abr txt d	Multiplication Lazy tongs see 8912 of 1886
641	1903	St. Louis Computing Co	US	23,826	abr txt d	Adding, printing, repeating device for multiplication
642	1903	Huettel A G	US	24,307	abr txt d	Pocket Cash register or abacus
643	1903	Baines H M	IND	25,109	abr txt d ref pic	Poly slide rule
644	1903	Tate S	GB	27,364	abr txt d	Update to 13504 of 1851 & 65 of 1884
645	1903	Cloud OE	US	27,472	abr txt d	All function printer
646	1903	NCR	US	27,802	No	Cash register
647	1903	NCR	US	27,803	No	Cash register
648	1903	Stockall J J	GB	27,975	abr txtt d	Compute workmen's times
649	1904	NCR	US	726	No	Cash register
650	1904	Hopkins H	US	854	abr txt d	Cash register
651	1904	Frydmane & Chambon	FR	1,109	abr txt d	Cash register
652	1904	Frydmane & Chambon	FR	1,110	abr txt d	Cash register
653	1904	Baldwin F S	US	1,286	abr txt d	Adder printer for GB
654	1904	NCR	US	1,408	No	Cash register
655	1904	NCR	US	1,598	No	Cash register
656	1904	MacMaster P	GB	1,787	abr txt d	Slide rule for work time not log
657	1904	NCR	US	1,910	No	Cash register
658	1904	Vermehren J	DK	2,172	abr txt d	Multiply, uses cones
659	1904	NCR	US	2,184	No	Cash register
660	1904	Nichols H G	US	2,618	abr txt d	Navigation calcs
661	1904	Muller SA & Zeising O	DE	3,135	abr txt d	Tab calc with tapes
662	1904	Weyrs, Fleshman & Duhring	US	3,213	abr txt d	Multiplying with figure-bearing tapes Wage calcs
663	1904	Eberhardt H	DE	3,353	abr txt d	Adding and printing on a strip
664	1904	Eberhardt H	DE	3,363	abr txt d	Adding printer
665	1904	O' Brien & Browning	GB	3,383	No	Adder printer
666	1904	Mohlenbruck H	CH	4,010	abr txt d	Circular slide rules for cutting screws
667	1904	NCR	US	4,302	No	Cash register
668	1904	NCR	US	4,303	No	Cash register
669	1904	NCR	US	4,304	No	Cash register
670	1904	Robertson J	GB	4,709	abr txt d Ref	Tab calc
671	1904	Connolly & Osborne	GB	5,168	abr txt d Ref	Planimeter for hides

#	Year	Patentee	Country	Pat Number	Copied	Descr
672	1904	NCR	US	5,709	No	Cash register
673	1904	Hensley H A	US	7,714	abr txt d	Keyboard Adder for computing interest
674	1904	Haggarty J R	GB	8,644	abr txt d	Calendar & date calculator
675	1904	Shiek D W	US	8,648	abr txt d	Adding lever driven
676	1904	NCR	US	8,709	No	Cash register
677	1904	NCR	US	8,710	No	Cash register
678	1904	NCR	US	8,887	No	Cash register
679	1904	Martin J H	US	8,976	abr	Adding Ten key board, connects typewriter
680	1904	Wilson and Heuer & Co	GB	9,052	abr	Slide rule for counts of yarn
681	1904	NCR	US	9,956	No	Cash register
682	1904	Kent G	GB	9,974	abr txt d	Liquid meter calc
683	1904	Eberhardt H	DE	10,264	abr txt d	Adding Addiator type.
684	1904	Graham & France	GB	10,853	abr txt d	Date or interest calc tab calc
685	1904	HorsburghE M	GB	11,023	abr txt d	Polar plotting paper
686	1904	Pallweber W G	DE	11,300	abr txt d	Noiseless Adder, sliding key
687	1904	NCR	US	11,749	No	Cash register
688	1904	Mugnier F	FR	12,021	abr txt d	ASMD gear wheels
689	1904	NCR	US	12,456	No	Cash register
690	1904	NCR	US	12,457	No	Cash register
691	1904	NCR	US	12,544	No	Cash register
692	1904	NCR	US	12,636	No	Cash register
693	1904	Cram E B	US	12,902	abr txt d	Adder typewriter
694	1904	Felt & Tarrant	US	13,094	abr txt d	Adder
695	1904	NCR	US	13,282	No	Cash register
696	1904	Brown W	GB	13,498	abr txt d	Slide rule 2slides
697	1904	Herman H	DE	13,946	abr txt d	Calc calendar
698	1904	Armstrong E R	US	14,143	abr txt d	Surveying inst
699	1904	NCR	US	14,233	No	Cash register
700	1904	Draper C S & Robertson W H	US	14,364	abr txt d	Multiplying weights & values using character plates
701	1904	Saint-Yves J A de	FR	14,377	abr txt d	Computing scales for architecture, music etc
702	1904	Richardson A D	GB	14,426	abr txt d	Circular device for reducing surveying data
703	1904	Wolodarsky H	GB	14,716	abr	Money reckoner (abacus sterling£sd
704	1904	Pike W H	US	14,979	abr txt d	Attachment to typewriter for adding £sd
705	1904	NCR	US	15,700	No	Cash register
706	1904	Bahmann G A	DE	17,035	abr txt d	M D Tab calc rolls
707	1904	Troger K E	DE	17,291	abr txtpic	Circular slide rule

#	Year	Patentee	Country	Pat Number	Copied	Descr
708	1904	Wales C	US	17,306	No	Key error correction
709	1904	Smith R C	US	17,499	abr txt d	Slide rule with device for decimal place
710	1904	NCR	US	17,525	No	Cash register
711	1904	Dumaresq J S	GB	17,719	abr txt d	Gunnery
712	1904	Hincks H T	GB	19,061	abr txt d	Circular rule for Ohm's Law
713	1904	Kun M & Halphen G	AH	19,101	abr txt d	Recording adding machine , typewriter keyboard
714	1904	NCR	US	19,161	No	Cash register
715	1904	NCR	US	19,162	No	Cash register
716	1904	NCR	US	19,163	No	Cash register
717	1904	Pike Adding Machine Co	US	19,725	abr txt d	Adder printer
718	1904	NCR	US	19,909	No	Cash register
719	1904	Holmes W P & Hodge L M	US	20,173	abr txt d	Calcs for rafters
720	1904	Rouget J R	FR	20,274	abr txt d	Adding machine, tapes & linear stylus
721	1904	NCR	US	20,717	No	Cash register
722	1904	Leumann R	CH	21,025	abr txt d	Multiply by repeated addition
723	1904	Morse H N	US	21,893	abr txt d	Calcumeter small stylus addiator £sd
724	1904	Huskisson A R	GB	22,029	abr txt d	Slide rule cum ruler
725	1904	Sperry E A	US	22,359	abr txt d ref	Keyless watch type calculator See USA
726	1904	Ensign E S	US	22,824	abr txt d	Big multiplier
727	1904	Horsfall A E	GB	22,829	abr txt d	Calculating scale for clinometer
728	1904	McCombie T G F	ab	22,854	abr txt d	Chart rule & scale for navigation
729	1904	Peard O L	GB	23,363	abr txt d	Complicated mechanical slide rule for boiler efficiency
730	1904	Lombard J	FR	24,746	abr txt d	Calcs for screw cutting
731	1904	Donlevy J P L	GB	25,573	abr	Printing calculator with "stops like an organ"
732	1904	Saunders H B	US	26,013	abr txt d	Printing multiplier See US Pat Saunders B H (sic)
733	1904	Hollerith H	US	27,072	abr txt d	Statistics
734	1904	Mallmann J	US	27,874	abr txt d	Keyboard adding machine
735	1904	Reintanz M & Rothe A	DE	28,573	abr txt d	Adder
736	1904	Pallweber J	DE	29,477	abr txt d	Small Adder
737	1905	Asbury L P	GB	62	abr txt d	Calliper gauge with slide
738	1905	Goldberg H E	US	68	abr txt d	Adder
739	1905	Goldberg H E	US	1,366	abr txt d	Adder
740	1905	Keuffel W	US	1,433	abr txt d	ASMD Thomas type
741	1905	Watson J J	GB	2,146	abr txt d	Scales for volumes etc

#	Year	Patentee	Country	Pat Number	Copied	Descr
742	1905	Smith-& Davis	GB	2,610	abr txt d pic	John Davis & Son, Smith-Davis Piecework and Premium calculators. These are probably the largest tubular slide rules made.
743	1905	Welter J	ES	3,227	abr txt d	Tab calc multiply
744	1905	Henderson W & Richards W	GB	3,690	abr txt	Multiplying by a constant , sliding bars
745	1905	Swift E S	US	3,761	abr txt	Adder
746	1905	Burkitt F G	GB	5,115	abr txt	Repeat multiply
747	1905	Gomila S de	ES	5,483	abr txt d	Double keyboard multiplying machine
748	1905	NCR	US	5,729	No	Cash register
749	1905	Pike Adding Mach Co	US	7,015	abr txt d	Adder
750	1905	Naville R L	CH	7,472	abr txt d	Bridge scorer
751	1905	Salomon A & Wimpenny W E	GB	7,546	abr txt d	Slide rule for stock yield
752	1905	Wilson J	GB	7,823	abr	Circular cards for interest calculations
753	1905	Zeising O & Vollrath H	ab	8,296	abr	Pin wheel for £ s d
754	1905	Mlitchell A	GB	8,428	abr txt d	Cheap circular Adder
755	1905	Nacken M	DE	8,720	abr txt d	Educational device
756	*1905*	Beals E V	US	8,916	abr txt d	Measure area & print
757	*1905*	Wyckoff, Seamans & Benedict	US	9,458	No	Motor driven Adder for Remington typewriter
758	1905	Hines J	GB	10,729	abr txt d	Multiply tabular sheet
759	1905	Hertzberg et al	US	10,959	abr txt d	Scale readings
760	1905	CromeyJ H	GB	11,471		Tab calc for butchers
761	1905	Johanson A M & Hultman I	SE	11,975	abr txt d	Re cam ring/ pin disk multipliers
762	1905	Dickinson H & M	GB	12,088	abr txt d	Adder disks £sd
763	1905	English T T	GB	12,596	abr txt d	Parallel lines for calcs
764	1905	Edmonds H H	AU	12,714	abr txt d	Trig
765	1905	Marshall H & Uebbing J T	US	13,149	abr txt d	Adder
766	1905	Smith A E	GB	13,514	abr txt d	Disks for bridge scores
767	1905	Wilson J	GB	13,528	abr txt	Circular cards for conversions
768	1905	Wales C	US	14,115	abr txt	Adder
769	1905	Findlay G	GB	14,406	abr txt	Disks bridge scorer
770	1905	Rechnitzer A	DE	14,453	abr txt d	Re motor driven slide set multiplying machines
771	1905	OsmonsonO A	US	17,317	abr txt d	Solve triangles timber work
772	1905	Lotterhand J C	US	17,375	abr txt d	Adder for Underwood typewriter
773	1905	Biane R	FR	17,479	abr txt d	Bridge scorer
774	1905	McCleary M	GB	17,528	abr txt d	Adder
775	1905	Elliott-Fisher Co	US	18,341	No	Adder for Fisher typewriter

#	Year	Patentee	Country	Pat Number	Copied	Descr
776	1905	Schulze F A	DE	18,735	abr txt d	Slide rule for powers & roots
777	1905	Welton F R	US	21,651	abr txt d	Adder
778	1905	Trinks R	DE	21,743	abr txt d	Re sterling pin wheel machines
779	1905	Wlilliams PL A	GB	21,887	abr txt d	Plate & rule for ratios
780	1905	Trinks R	DE	21,923	No	Pin wheel
781	1905	Trinks R	DE	22,524	abr txt d	Sterling pin wheel machines
782	1905	Cooper A	GB	22,771	abr txt d	Abacus
783	1905	Trinks F	DE	23,636	No	Adder
784	1905	Longini H E	BE	23,804	abr txt d	Adder
785	1905	Trinks F	DE	24,335	No	Adder
786	1905	GinetJ H	US	25,156	abr txt d	Motorised Adder
787	1905	Soc. desAppareils de Controle &c	FR	25,478	No	Adder
788	1905	Roth G	CH	25,882	No	Adder for £sd
789	1905	Karasek & Aumund	CH	26,464	abr txt d	Adder for £sd
790	1905	Garcia M J	Ar	26,507	abr txt d	Solve sph triangles
791	1905	Dickinson H & M	X	12088A	abr txt d	Adder disks £sd
792	1906	Collins A G	GB	186	abr txt d	Ready reckoner for prices, interest etc. Slide card
793	1906	Ronald J	GB	1,694	abr txt d	Proportions
794	1906	Fallon C J	ab	1,986	abr txt d	Abacus
795	1906	Jennings A R	GB	2,127	abr txt d	Adder printer
796	1906	Joy D G	GB	2,990	abr txt d	Adder printer
797	1906	Hollerith H	US	4,898	abr txt d	Statistics
798	1906	Postans A J	GB	5,631	abr txt d	Keyboard Adder
799	1906	Trinks F	DE	5,647	No	Pinwheel
800	1906	Gruner & Jalley	US	5,755	abr txt d	Tab calc keyb
801	1906	Levin J L	US	6,717	abr txt d	Key set Adder
802	1906	Hall C G	GB	6,748	abr txt d	Single disk Adder stylus
803	1906	National Adding Mach Co.	US	7,691		Adder on type writer
804	1906	Goldberg H E	US	8,000	abr txt d	Adder
805	1906	TaylorW	GB	8,187	abr txt d	Subtract fractions
806	1906	Lindner M	AH	9,360	abr txt d	Adder
807	1906	Evans -Cross G W	GB	10,459	abr txt d	Tab calc
808	1906	Goldberg H E	US	10,661	abr txt d	Adder
809	1906	Burroughs	US	10,728	No	Adder
810	1906	Eckelmann KM	DE	12,084	abr txt d	Disk Adder for £sd
811	1906	Janik E	AH	12,370	No	Transfer mech

#	Year	Patentee	Country	Pat Number	Copied	Descr
812	1906	Pollen & Isherwood	GB	13,082	abr txt d	Trig ship target
813	1906	Branczik K W	GB	14,142	abr txt d	Circular slide rule with gear driven rings
814	1906	Pollen & Isherwood	GB	14,305	abr txt d	Trig calc see3082/1906
815	1906	Roth G	CH	14,680	abr txt d	Adder
816	1906	Abbott P W H	GB	15,498	abr txt d	Trig
817	1906	Rinsche F C	US	15,532	No	Printer Adder mod to13316/1900
818	1906	Pike W H	US	16,617	abr txt d	Adder
819	1906	Lutz L	DE	17,645	abr txt d	Adder
820	1906	Burroughs	US	18,628	No	Adder
821	1906	Gaither W	US	19,008	No	Wide carriage print Adder
822	1906	Burroughs	US	20,728	No	Adder
823	1906	Woerner L C	DE	20,824	abr txt d	Micrometer multi system
824	1906	BarnardH O	Ceylon	22,630	abr txt d	Solve triangles
825	1906	Salcher A	AH	23,173	abr txt d	ASMD repetition
826	1906	Vermehren J	DK	23,241	abr txt d	Adder
827	1906	Trinks F	DE	23,659	No	Pinwheel
828	1906	Johnsen S	DE	23,885	abr txt d	Pocket Cash register watch
829	1906	Semle A	DE	24,750	abr txt d	Ready reckoner cards
830	1906	Spitz L	DE	26,296	abr txt d	Thomas machine
831	1906	Rowbotham J E & Malins J	GB	26,710	abr txt d	Ready reckoner on cylinder tab calc
832	1906	Nahlik G	AH	26,800	abr txt d	Adder
833	1906	Callender's Cable,	GB	27,683	abr txt d	Side rules for cables
834	1906	Pothig R & Renner P	DE	29,377	abr txt d	Re Thomas type
835	1907	Patent Dev Co	US	395	abr txt pic?	Tab calc roll
836	1907	Coradi G	CH	1,065	abr txt pic?	Planimeter
837	1907	Matthews S & Williams S J	GB	1,083	abr txt d	Discs for checking telegraphic codes
838	1907	Thomas & Harling	GB	2,083	abr txt d	Slide rule for strength of fabric
839	1907	Bartels J L	US	2,368	abr txt d	Ruler with slde
840	1907	ThomasC G G	?	3,228	abr txt d	Tab calc for elec resist
841	1907	Pugh J V	GB	3,685	abr txt d	Slide rule in 20 parts
842	1907	Gorin F P	US	3,764	abr txt d	Adding single bank key set
843	1907	Spitz L	DE	4,925	abr txt d pic	Reverse for Thomas type
844	1907	Elliott-Fisher & Smith J A	US	5,206	abr txt d pic	Adder for type writer
845	1907	Dreyfus & Levy	GB	5,779	abr tx d	Disk Adder
846	1907	Niebuhr H	DE	6,102	abr tx d	Integrating mechanism
847	1907	Schmolke R J	DE	6,272	abr tx d	Adding aid
848	1907	Giersing O M	DK	6,425	No	Adder printer
849	1907	Leder	DE	7,018	abr txt d	Multiplying keyboard

#	Year	Patentee	Country	Pat Number	Copied	Descr
850	1907	Golding H A	GB	8,196	abr txt d	Poly slide Rule with three slides for boilers &c
851	1907	Mavitta W	GB	9,428	abr txt d	computing scale, slide rule
852	1907	White & Bean	GB	10,231	abr txt d	Area measurer
853	1907	Wahl J C	US	11,696	abr txt d	Adding attachment for typewriter
854	1907	Trinks F	DE	11,999	abr txt d	Pin wheel
855	1907	Burroughs	US	12,083	No	Adder
856	1907	DoscherT	DE	12,314	abr txt d	Abacus
857	1907	Samuel E	GB	12,682	abr txt d	Adder printer
858	1907	Flory & Flory	GB	13,447	abr txt d	Small Adder for £sd
859	1907	Reppert R. von	US	13,731	abr txt d	Adder printer
860	1907	Eckelmann M	DE	14,250	abr txt d	Disk Adder
861	1907	Masch Fabrik Moenus AG	DE	14,863	abr txt d	Area measure
862	1907	NCR	US	15,269	No	Cash register
863	1907	NCR	US	15,270	abr txt d	Product price computer
864	1907	Cordingley W G	GB	15,435	abr txt d	Small £sd Adder
865	1907	Hoskins B	US	16,997	abr txt d	Adder printer
866	1907	Kreutzfeldt R T	GB	17,111	abr txt d	Calc beams etc
867	1907	Gray J	GB	17,115	abr txt d	Solve problems
868	1907	GancherA I	US	17,161	abr txt d pic	"Golden Gem" adder
869	1907	Hopkins H	US	18,058	abr txt d pic	A M List for type writers
870	1907	Yokota Seinen	JAP	18,218	abr txt d ref	Use of log c = 2.718281823 as the basis of log-log scales. John Davis and Sons, Derby, slide rules.
871	1907	Muschke A	DE	18,388	abr txt d	Directional photo exposure
872	1907	Burroughs	US	18,516	No	Adder
873	1907	Albree E C	US	18,776	abr txt d	Cards for wages
874	1907	Read W J	GB	20,708	abr txt	Circular rule for coal consumption of locomotive
875	1907	GledhillA H	GB	20,725	abr txt d	Transfer mechanism for calc mach
876	1907	Whiting W R G	GB	21,955	abr txt d	Planimeter
877	1907	GatewoodW F	US	22,212	No	Big Adder printer
878	1907	Watkins A A	GB	22,456	abr txt d	Photo exposure
879	1907	Hiillyer EC	US	22,721	abr txt d	Disk Adder Bridge scorer
880	1907	Riedl C	AH	23,343	abr txt d	Multiplier
881	1907	Duplex Adding Machine Co	US	23,890	abr txt d	Adder Printer
882	1907	Hlinchman G N	US	24,489	abr txt d	Adder lister for £sd
883	1907	Hlinchman G N	US	24,490	No	Adder lister for £sd
884	1907	MacLarenCheese Cutting Machine Co	CAN	24,516	abr txt d	Cheese Cutter

#	Year	Patentee	Country	Pat Number	Copied	Descr
885	1907	Rothwell H	GB	25,412	abr txt d	Concentric cylinders to calculate interest tab calc
886	1907	Katz M	AT	25,755	abr txt d	Tab calc for interest
887	1907	Buerk R	DE	26,170	abr txt d	Adder
888	1907	Tyler F W	GB	26,929	abr txt d	Disk for £sd insurance premiums
889	1907	Hollerith H	US	27,067	abr txt d	Statistics
890	1907	Prosser H R	GB	27,358	abr txt d	Helical member slide rule
891	1907	Albers J J O F	DE	27,368	abr txt d	Treadle operated calc machine
892	1907	Bollinger & Landry	CH	27,446	abr txt d	Pin wheel machine
893	1907	Trinks F	DE	27,481	abr txt d	Pin wheel machine
894	1907	Blum	AH	28,308	abr txt d	Adder printer
895	1907	Drennan J	GB	28,452	abr txt d	Stepped drum calculator
896	1908	Schuster E	DE	87	abr txt d	Pin wheel
897	1908	Newton & Michell	AUS	474	abr txt d	Check cipher apparatus
898	1908	Burroughs	US	655	No	Adder
899	1908	Burroughs	US	656	No	Adder
900	1908	Cossor & Flory	ab	930	abr txt d	Stylus Adder
901	1908	Burroughs	US	1,675	No	Adder
902	1908	Burroughs	US	1,810	No	Adder
903	1908	Connolly & Osborne	GB	2,161	abr txt d	Planimeter
904	1908	Leder E	DE	2,706	abr txt d	Log scale on sheet on drums
905	1908	Holden E C	GB	3,199	abr txt d	Slide rule for cotton production 3 slides
906	1908	Behr B C M	DE	3,402	abr txt d	Chain Adder
907	1908	Goldman H	DE	4,382	abr txt d ref	Chain Adder
908	1908	Schooling & Randall	GB	4,872	abr txt d ref	Add lister for £sd
909	1908	Schooling & Randall	GB	4,873	No	Add lister
910	1908	Schooling & Randall	GB	4,874	No	Add lister
911	1908	Rein Spitz & Co	DE	4,938	abr txt d ref	Thomas type
912	1908	Merrick H L	US	5,286	abr txt d ref	Volume on conveyor belt
913	1908	Burroughs	US	5,419	No	Adder
914	1908	Burroughs	US	6,114	No	Adder
915	1908	Essex E H	GB	6,278	abr txt d ref	Multi rule for gas flow
916	1908	Wright W	US	6,647	abr txt d ref	Adder on type writer
917	1908	Farmar F C	GB	7,364	abr txt d ref	Slide rule for ullaging
918	1908	Fellows H W	US	7,421	abr part	Device for angles etc in turning blanks for bevel gears
919	1908	Payen L	FR	8,893	abr txt d	Multiplying, Thomas type
920	1908	Billing NP	GB	9,070	abr txt d	Adder
921	1908	Todd J G	GB	10,119	abr txt d	Adder Ticket issuing
922	1908	Walker A	AUS	11,439	abr txt d	Small Tab calc
923	1908	Postans A J	GB	12,057	abr txt d	Add print

#	Year	Patentee	Country	Pat Number	Copied	Descr
924	1908	Postans A J	GB	12,058	abr txt d	Cash register
925	1908	NCR	US	12,500	No	Cash register
926	1908	Reeves E A	GB	14,008	abr txt d	Astronomical device
927	1908	Jelfs G W	GB	15,073		For teaching fractions
928	1908	Lemaignen RBA	FR	15,094	abr txt d	Drum Adder
929	1908	Lemaignen RBA	FR	15,095	No	Adder various units
930	1908	Lane M E	GB	15,899	abr txt d	Simple Adder
931	1908	Daemen-Schmid H	CH	15,964	abr txt d	Log scale on cylinder
932	1908	Meilicke C A	US	16,192	abr txt d ref	Tab calc for interest
933	1908	Meilicke C A	US	16,201	abr txt d	Tab calc £sd
934	1908	Meilicke C A	US	16,212	abr txt d	Tab calc interest
935	1908	Tourtell J M	GB	16,374	abr txt d	Adder printer
936	1908	Twelve trees W N	GB	17,334	abr txt d	Calc for reinforced concrete
937	1908	Goldman H	US	17,969	abr txt d	Chain Adder
938	1908	Hopkins H	US	18,320	No	Adder on type writer
939	1908	Hopkins H	US	18,321	No	Multiplier
940	1908	Soncini G	IT	18,367	abr txt d	Multiplying, sliding members between plates
941	1908	Goldfarb & Drusin	US	20,028	abr txt d	Stylus set Chain Adder
942	1908	Giuliani V	CH	20,467	abr txt d	ASMD
943	1908	Nicolas F	CAN	21,284	abr txt d	Tab calc
944	1908	Trinks F	DE	22,435	abr txt d	Pin wheel
945	1908	Colles G	GB	22,508	abr txt d	Scales for conversions not log
946	1908	Leder E	DE	22,620	abr txt d	Circular mechanical slide rule
947	1908	Jerand D	HUN	22,636	abr txt d	Abacus
948	1908	Connecticut Computing Machine Co	US	23,393	abr txt d	Add printer
949	1908	Schooling & Randall	GB	23,729	abr txt d	Adder lister
950	1908	Marshall R	GB	23,981	abr txt d	Circular calculator for blast furnace charges
951	1908	Harris A W	GB	25,015	abr txt d	Adder electric or pneumatic from type writer
952	1908	Hines J	GB	26,518	abr txt d ref	Tab calc see 10729/0905
953	1908	British Adding Machine Co	GB	26,763	abr txt d ref	Adder
954	1908	Lange, Lange, & Moe	NOR	27,246	abr txt d ref	Adder
955	1908	Freschl A	US	28,128		Planimeter
956	1908	Mastaglio M	DE	28,252	abr txt d	Four rule machine prints
957	1908	Ellis H	US	28,253	abr txt d	Typewriter-recording adding machine
958	1908	Hasselberger F	DE	28,566	abr txt d	Abacus

#	Year	Patentee	Country	Pat Number	Copied	Descr
959	1909	Dreyfus & Levy	GB	621	abr txt d	Adding machine disc plate ADAL?
960	1909	Kettlitz C	DE	1,429	abr txt d	Adding & Balancing machine with toothed drums
961	1909	Cordingley W G	GB	1,751	abr txt d	Stylus disc Adder for £sd
962	1909	Burt E A P	GB	3,073	abr txt d	Tab calc rule for timber
963	1909	Vincent J G	US	3,075	No	Adder
964	1909	Cooper Bale et Al	GB	3,132	abr txt d	Abacus for teaching
965	1909	Guy F E	GB	3,551	abr txt d	M & D machine
966	1909	NCR	US	4,256	No	Cash register
967	1909	American Cash register Co	US	4,450	No	Cash register
968	1909	TillmanF J	US	4,784	abr txt d	ASMD
969	1909	HunterJ P	US	5,204	No	Motorised Adder
970	1909	Bordt A	DE	5,214	No	Adder
971	1909	Vancu E	HUN	5,300	abr txt d	Tabular calculator stepped plates
972	1909	Felt D E	US	5,387	No	Adder for £ sd
973	1909	Jenks G F	GB	5,489	abr txt d	Calculating Teaching frame with pegs
974	1909	Hunter J C & Edge D R	GB	6,064	abr txt d	Slide rules for weights of bars etc(special cursor)
975	1909	Simpson L	AR	6,298	abr txt d ref	Log tabular calculator
976	1909	Pailthorpe H N	GB	6,439	abr txt d ref	Adder, age calculator
977	1909	Salcher & Werle	AH	6,657	abr txt d ref	Adder
978	1909	Vincent J G	US	6,999	No	Subtraction key on Adder
979	1909	Meilicke C A	US	7,109	abr txt d ref	Tabular calculator dates & interest
980	1909	Tourtel J M	GB	7,722	abr txt d	Locking slide for adding machines
981	1909	Smith R C	US	7,731	abr txt d	Special cursor to give order of tens
982	1909	Barr M & Clarke E R	GB	8,259	abr txt d	Multiplying machine £sd times T cwt qrs Machine with pulleys & disks
983	1909	Wright W	US	8,740	abr txt d	Adding attach typewriter
984	1909	Felt D E	US	9,509	abr txt d	Tab calc for £sd with Adder
985	1909	Toledo Computing Scale Co	US	10,013	abr txt d	Cylinder scale
986	1909	LangeE & L	NOR	10,967	No	Adder for £sd
987	1909	Oelschlager W	AH	11,029	abr txt d	Circular slide rule
988	1909	Peabody Leather	US	11,034	abr txt d	Area of hides
989	1909	Cordt H	DE	11,650	abr txt d	Multiplying with plates & teeth
990	1909	Layton C & E	GB	12,032	abr txt d	Thomas type multiplier with spring controlled setting slides
991	1909	Watkins A	GB	12,120	abr txt d	Mods to photographic rule
992	1909	Burt E A P	GB	12,516	z	Mods to timber rule for GB measures

#	Year	Patentee	Country	Pat Number	Copied	Descr
993	1909	Cheape J A	US	12,972	abr txt d	Add subtract endless band
994	1909	Vermehren J	DK	13,039	abr txt d	Mult \Divide toothed disks
995	1909	Daniel & Daniel	US	13,100	abr txt d	Adder for type writer
996	1909	Schooling Fiennes & Wykeham	GB	13,416	No	Add Subtract
997	1909	Schuster E	DE	16,729	abr txt d	Pin wheel
998	1909	Hill E	US	16,900	abr txt d	Course correction
999	1909	Soncini	IT	17,041	abr txt d	Multiplying using the Pythagorean products
1000	1909	Cochran JE	US	18,745	abr txt d	Computing scale
1001	1909	Underwood Typewriter Co	US	18,937	abr txt d	Add subtract on typewriter
1002	1909	Schettler G A	GB	19,156	No	Area of leather
1003	1909	Underwood Typewriter Co	US	19,550	abr txt d	Add subtract on typewriter
1004	1909	Jahnz E	DE	19,845	No	
1005	1909	Jahnz E	DE	19,954	abr txt d ref	Continued multiply The MADAS
1006	1909	Schooling Fiennes & Wykeham	GB	19,957		Adder for marking billiards etc.
1007	1909	Daemen Schmid H	CH	20,301	abr txt d	Thomas type machine
1008	1909	Hollerith H	US	20,317	abr txt d	Stats
1009	1909	Rechnitzer A	DE	20,915	No	Motorised Adder
1010	1909	Jahnze E	DE	21,023	No	M & D
1011	1909	British AddingMachine Co	GB	22,862	No	Adder
1012	1909	Mackay D	GB	23,385	abr txt d	Tabular scale for loading a vessel
1013	1909	Grimme Natalis	DE	24,596	abr txt d	Pin wheel
1014	1909	Felt D E	US	25,766	abr txt d ref	Mods and tab calc for £sd
1015	1909	Heinitz W R	DE	30,338	abr txt d	Stylus Adder
1016	1910	Bechtolsheim Freiherr von	DE	1,217	abr txt d	Add Subtract
1017	1910	Vincent J G	ab	1,516	No	Adder printer
1018	1910	Felt D E	US	1,622	abr txt d	Bank key operated machines with bell
1019	1910	Hammond R W	GB	2,133	abr txt d	Spiral rule -similar to Fuller but transparent
1020	1910	LenthallCB	GB	2,451	abr txt d	Tidal height calculator
1021	1910	Meyer P	DE	4,210	No	Adder printer
1022	1910	Morin A M	FR	5,269	abr txt d	Area of hide
1023	1910	Fowler W H	GB	5,528	abr txt d	Fowler's first patent for a circular calculator with a centre knob.
1024	1910	Robertson J	GB	5,871	abr txt d ref	Reckoner on rotatable rollers Tab calc
1025	1910	Barr M & Clarke E R	GB	7,014	abr txt d	Multiplying machine £sd times T cwt qrs
1026	1910	Wachter E & Hugle S	DE	7,080	abr txt d	Abacus on school box
1027	1910	Vogel V	RU	7,540	abr txt d	Add subtract worm gearing (see later US

#	Year	Patentee	Country	Pat Number	Copied	Descr
1028	1910	Wright W	US	8,981	No	Adder on type writer
1029	1910	Pletnik I	RU	9,501	abr txt d	Multiplying by rotating cylinders exposing printed digits
1030	1910	Weston H V P	GB	10,482	abr txt d	Slide rule with trig scales
1031	1910	Ralston S B	GB	11,561	abr txt d	Metacentric height
1032	1910	Moe A T	NOR	11,810	No	Adder
1033	1910	Hemm H C C , von	DK	12,935	abr txt d	Log scales on one sheet for solving technical equations
1034	1910	Hines J	GB	12,963	abr txt d	Tab calc on pedestal
1035	1910	Kruger G	DE	13,084	abr txt d	Abacus with pencil box
1036	1910	Stelfox S H	GB	13,852	abr txt d	Stelfox slide rule manufactured for Davis of Derby by Dennert & Pape.
1037	1910	NCR	US	14,400	No	Cash register
1038	1910	Champeix L T & E	FR	14,589	abr txt d	Multiplying weight, money in different systems. Cylinders Tab calc
1039	1910	Evans W J	ab	14,662		A S & days between dates Disks
1040	1910	Cox E L	GB	15,101	abr txt	Tabular calculators with loose leaf tables
1041	1910	JahnA	AH	16,236	No	Thomas type
1042	1910	Cordt H	DE	16,261	abr txt	ASMD
1043	1910	Goodson R & Burnett A J H	GB	17,471	No	Add subtract Print
1044	1910	Goodson R & Burnett A J H	GB	17,472	No	Cash register
1045	1910	Rauchwetter F	DE	17,958	abr txt d	Direct key driven multiplier
1046	1910	Henning G F E	DE	18,547	No	Cash register with money manipulation
1047	1910	NCR	US	18,791	No	Cash register
1048	1910	Harris A W	GB	19,211	No	Adder on type writer
1049	1910	McLean D W	NZ	21,658	abr txt d	Adder, game scorer Disks
1050	1910	Austin S B	US	21,704	abr txt d	Mult by repeated addition
1051	1910	Keighley C W	GB	21,842	abr txt d	Adder printer
1052	1910	Hutchinson scalesCo	US	22,080	No	Computing scale
1053	1910	Hutchinson scalesCo	US	22,081	No	Computing scale
1054	1910	Gray H	GB	22,445	abr txt d	Multiplying Tables on bands & rollers
1055	1910	Johansen C E	SE	22,939	No	Adder
1056	1910	Hudson E & Bedell B H	GB	23,872	abr txt d	Tabular calculator
1057	1910	Cochran J E	US	24,005	abr txt d	Computing scale
1058	1910	Biane & Lourau	FR	24,813	abr txt d	Adder printer bridge scorer
1059	1910	Barr M, Bell R A Beeton HR,	GB	25,018	abr txt d	Multiplying device using balls, attached to a typewriter
1060	1910	Cloud O E	US	27,151	No	A S Keyboard
1061	1910	Howieson J T	RU	28,058		Adder. motor driven,on typewriter

#	Year	Patentee	Country	Pat Number	Copied	Descr
1062	1910	Odhner V J	SE	28,465	No	Detent mechanism
1063	1911	Rheinische metall waaren	DE	3,511		High angle gun calc
1064	1911	Spitz & Rein	DE	5,283	abr txt d	Direct multiplier
1065	1911	Bec V-M	FR	5,855	abr txt d	Circular disk stylus set
1066	1911	Wakefield C J	GB	7,778	abr txt d	Adder billiard scorer
1067	1911	Wendler A	DE	7,842	abr txt d	Spher trig
1068	1911	Koenig	DE	8,438	No	Adder printer
1069	1911	NCR	US	9,167	No	Cash register
1070	1911	NCR	US	9,301	No	Cash register
1071	1911	NCR	US	9,302	No	Cash register
1072	1911	Ionides A G	GB	9,446	abr txt d	Circular rule for internal combustion engines
1073	1911	McCaskey Elec Calc Co	US	9,563	abr txt d	ASMD Print
1074	1911	French & Frederick	ab	11,464		Spher trig
1075	1911	Jahn A	AH	12,613	abr txt d	Thomas type
1076	1911	Crabtree	GB	12,934	abr txt d	Computing scales for gear wheels
1077	1911	Booth H S	GB	13,380	No	Adder printer in colour
1078	1911	Booth H S	GB	13,381	No	Adder for typewriter
1079	1911	Underwood Comp Mach Co	US	13,445	abr txt d	Add print typewriter
1080	1911	Grenon C	IND	13,548	abr txt d	ASMD Money
1081	1911	Marks A S	GB	14,180		Missile tracker
1082	1911	Booth H S	GB	14,554	No	Adder for typewriter
1083	1911	Underwood	US	14,816	No	Adder
1084	1911	Schuster	DE	14,918	abr txt d	M D Pin wheel
1085	1911	Proescholdt M	DE	15,289	abr txt d	Tabular calculator for freights
1086	1911	Hollerith H	US	15,475	abr txt d	Statistics
1087	1911	Rechnitzer A	AH	15,908	abr txt d	A S M D
1088	1911	Seidel & Naumann	DE	15,972		Thomas type
1089	1911	Burroughs	US	16,077	No	Adder printer
1090	1911	Hills W D	GB	16,198	abr txt d	Circular currency slide rule pocket
1091	1911	Owens J S	GB	16,256	abr txt d	Annular slide rule on telescope for smoke blackness
1092	1911	Hollerith H	US	16,432	abr txt d	Printing punch cards
1093	1911	NCR	US	16,724	No	Cash register
1094	1911	NCR	US	16,725	No	Cash register
1095	1911	NCR	US	16,726	No	Cash register
1096	1911	NCR	US	16,727	No	Cash register
1097	1911	Seidel & Naumann	DE	16,737		Stylus Adder
1098	1911	Burroughs	US	16,800	No	Adder
1099	1911	Dick AB & Co	US	18,809	No	Adder

#	Year	Patentee	Country	Pat Number	Copied	Descr
1100	1911	NCR	US	18,956	No	Cash register
1101	1911	TrinksF	DE	18,961	No	Adder
1102	1911	Hopwood W	void	19,488	No	prop calc for sizing print blocks
1103	1911	Underwood	US	19,617	No	Add type
1104	1911	Dalton Adding Machine Co	US	19,694	No	Adder
1105	1911	NCR	US	20,331	No	Cash register
1106	1911	NCR	US	20,332	No	Cash register
1107	1911	NCR	US	20,333	No	Cash register
1108	1911	Bordt A	DE	20,596	abr txt d	Adder printer
1109	1911	Wendling Hoch adding Mach Co	US	21,592	abr txt d	Add Print motorised
1110	1911	Burroughs	US	21,861	No	Adder
1111	1911	Sloan R H	US	22,306	abr txt d	Wage calculator
1112	1911	Schettler A	GB	22,597	No	Area hides mod to 3920/1910
1113	1911	Bamlet , Box & Williamson	GB	22,921	abr txt d	A M for dividends, taxes etc
1114	1911	Burroughs	US	23,343	No	Adder
1115	1911	Wheat F	GB	24,565	zbr txt d	Adder for avoirdupois values
1116	1911	Pivoda F	AH	25,313	abr txt d	Presto calculator for discounts and interest.
1117	1911	Pivoda F	AH	25,314	abr txt d	Micrometer attachment to slide rules.
1118	1911	Burroughs	US	25,588	No	Adder
1119	1911	NCR	US	25,717	No	Cash register
1120	1911	Johansen G E	SE	27,114	abr txt d	Add Subtract
1121	1911	Rauchwetter	DE	27,251	No	Adds to 17958/1910
1122	1911	Baum M	DE	27,413	abr txt d	Small Adder
1123	1911	Cole H L	IND	28,360	abr txt d	Poly-Slide rule for tractive effort of steam engines
1124	1911	Trinks F & Schaller C	DE	28,365	abr txt d	Pin wheel
1125	1911	Simpson & Woods	GB	28,783	abr txt d	Planimeter
1126	1911	O'Connor C M M	AUS	29,043	abr txt d	ASMD disks
1127	1911	Trinks F	DE	29,217	No	Multiplier
1128	1911	Burroughs	US	29,273	No	Adder
1129	1912	Burroughs	US	442		Adder
1130	1912	Ommundsen H	GB	461	abr txt d	Bridge Scoring & subtracting
1131	1912	Inglis H R G	GB	1,533	abr txt d	(Multi-slide rule sold as "FlashReckoner "
1132	1912	Negretti & Zambra	GB	1,558	abr txt d	Spherical trig calculator,
1133	1912	Pollen A H & Isherwood H	GB	1,562	abr txt d	Artillery slide rule
1134	1912	Buckle E	GB	2,610	abr txt d	Adding, Stylus rocks annular member
1135	1912	Smith C J & Kleeberg P	US	3,611	abr txt d	Tabular calculator
1136	1912	Dick, AB & Co	US	3,725	abr txt d	Adding

#	Year	Patentee	Country	Pat Number	Copied	Descr
1137	1912	Dick, AB & Co	US	4,178	No	Adding
1138	1912	McCaskey Electric CalculatorCo	US	4,376	No	Add Subtract
1139	1912	McCaskey Electric CalculatorCo	US	4,680	No	Add Subtract
1140	1912	Barr & Stroud Ltd	GB	5,182		Gunnery computing scales
1141	1912	Bernovits V	void	5,570	abr txt d	Tabular calculator for interest Bands on rollers
1142	1912	McCaskey Electric CalculatorCo	US	5,651	No	A S with several Totalizers
1143	1912	Burroughs	US	8,261	abr txt d	Adding for avoirdupois weights
1144	1912	Acrey CM, WB & BL	US	8,368	abr txt d	Multiplying tax calculator rotary gears
1145	1912	British Thomson Houston	GB	8,526	abr	Planimeter for use when values not proportional to heights
1146	1912	Jeffree F H	GB	9,704	abr txt d	A SM D slides Tab Calc
1147	1912	Piscicelli	FR	10,148	abr txt d	Motorised pin wheel
1148	1912	Trant E L	GB	10,212	abr txt d	A S for compass course Bands
1149	1912	Kerr D S	CAN	10,854	abr txt d	AS and dates on strips
1150	1912	Kerr D S	CAN	10,855	abr txt d	A S Dates on slides
1151	1912	Underwood J T	US	10,902	No	A S on type writer
1152	1912	Bannehr,Dolton, Gilbert & Watson	GB	11,076	No	A S for gross and tare
1153	1912	Buchert A	DE	11,598	abr txt d	Abacus
1154	1912	Allard J F	US	11,644		Adder on type writer
1155	1912	Farmar F C	GB	12,717	abr txt d pic	Slide rules for discounts etc. with cylinder pic
1156	1912	Werner H	DE	12,891	No	Thomas type
1157	1912	NCR	US	13,038	No	Cash register
1158	1912	NCR	US	14,011	No	Cash register
1159	1912	VermehrenJ	DK	14,562	abr txt d	M D
1160	1912	Burroughs	US	14,777	No	Adder
1161	1912	Avery C H	US	14,853	abr txt d	Circular rule for wool costing
1162	1912	Cheape J A	US	14,901	abr txt d	Adder for £sd
1163	1912	Fincato P	IT	15,001	abr txt d	Adding, multiplying by repetition
1164	1912	Conti J T F	FR	15,143	abr txt d	Circular Conversion scale
1165	1912	Vaughan M	GB	15,349	abr txt d	Spherical trig calculator,
1166	1912	Underwood	US	16,589	No	A S on typewriter
1167	1912	Hudson G R	GB	16,704	No	Cash register printing
1168	1912	Wlitsell J W	US	16,943	abr txt d	Finger set Adder
1169	1912	Nicholls E C	GB	17,368	abr txt d	Adder on type writer
1170	1912	Beaucourt E	FR	17,401	abr txt d	Multi disk Adder
1171	1912	Underwood	US	18,568	No	Adding typewriter
1172	1912	Autarit A G	AH	18,642	No	Motor multiplier

#	Year	Patentee	Country	Pat Number	Copied	Descr
1173	1912	Diestelhorst T	DE	19,180	abr txt d	Statistics Punch card
1174	1912	Wanderer Werke	DE	19,273	abr txt d	Adder
1175	1912	Wanderer Werke	DE	19,274	No	Adder
1176	1912	Matjeka O R	DK	19,506	abr txt d	Tabular calculator on canvas rollers
1177	1912	Fowler WH & H	GB	20,416	abr txt d	Fowler's patent to improve accuracy of the calculators.
1178	1912	NCR	US	20,843	No	Cash register
1179	1912	Bruckmann	DE	21,446	abr txt d	ASMD Pricing utilities
1180	1912	Knecht B	DE	23,304	abr txt d	M D
1181	1912	Underwood	US	23,499	No	Adder Motorised
1182	1912	Underwood	US	23,500	No	Adder Motorised
1183	1912	Underwood	US	23,618	No	Adder Motorised
1184	1912	Grimme Natalis	DE	23,665	No	Multiplier
1185	1912	Grimme Natalis	DE	23,666	No	Multiplier
1186	1912	Underwood	US	23,708	No	Adder Motorised
1187	1912	Underwood	US	23,818	No	Adder
1188	1912	Sargent HN	GB	24,980	abr txt d	Speed & position of moving bodies of troops Watch type SR
1189	1912	Simtion P	AH	25,345	abr txt d	Tabular calculator for interest
1190	1912	Dring & Fage	GB	25,466	abr txt d	Slide rule for timber volumes & prices
1191	1912	Dring & Fage	GB	25,467	abr	Measure for timber
1192	1912	Norman H	GB	26,162	abr txt d	Tabular & Log calculator for manufacturing time of card boxes
1193	1912	NCR	US	26,386	No	Cash register
1194	1912	Felt DE	US	26,772	No	Adder
1195	1912	Babinil L	US	26,890	abr txt d	Key set Adder
1196	1912	Baldwin FS	US	27,231	No	ASMD Detent
1197	1912	NCR	US	27,767	No	Cash register
1198	1912	NCR	US	27,768	No	Cash register
1199	1912	Trinks F	DE	27,801	No	mm
1200	1912	Lilly WE	GB	28,603	abr txt d	Lilly's Improved Spiral Rule - spiral log-log scales.
1201	1912	Seidel & Neumann	DE	28,850	abr txt d	Multiply: alarm for a Thomas machine
1202	1912	Trinks F	DE	29,214	No	Pinwheel
1203	1912	Clarke E R & Debenham E R	GB	29,574	abr txt d	Tabular calculator
1204	1912	NCR	US	30,845	No	Cash register
1205	1912	Allard J F	US	116,444	No	Adder on type writer
1206	1913	Baldwin F S	US	4,153	abr txt d	ASMD
1207	1913	Burroughs	US	9,102	No	Add print
1208	1913	Sloan R H	US	9,502	full	Tab calc for wages
1209	1913	Faber A W	DE	10,753	abr txt d	Faber patent for frame design.

#	Year	Patentee	Country	Pat Number	Copied	Descr
1210	1913	Ralston S B	GB	11,283	abr txt d	Metacentric calculator
1211	1913	Breuer H	AH	11,575	abr txt d	Tab calc
1212	1913	US cashier co	US	11,823	No	Adder
1213	1913	Mace J	FR	12,091	abr txt d	Sph trig
1214	1913	Underwood JT	US	12,323	No	Adder typewriter
1215	1913	Peck W	GB	12,614	abr txt d	Sph Trig
1216	1913	Kleeberg P	US	12,963	abr txt d	Tab calc
1217	1913	McCaskey	US	12,987	No	Cash register
1218	1913	NCR	US	13,547	No	Cash register
1219	1913	Duco Adding Mach Co	US	14,044	No	Adder
1220	1913	NCR	US	14,109	No	Cash register
1221	1913	NCR	US	14,110	No	Cash register
1222	1913	BaldwinF S	US	14,152	abr txt d	ASMD
1223	1913	NCR	US	14,610	No	Cash register
1224	1913	NCR	US	14,611	No	Cash register
1225	1913	Bannehr et Al	GB	15,291	abr txt d	Add avoirdupois
1226	1913	NCR	US	15,507	No	Cash register printing
1227	1913	KruppA G	DE	15,615	abr txt d	Gunnery calc
1228	1913	Childs C V	GB	15,821	abr txt d	Slide rule for constructional steelwork
1229	1913	Young H	GB	16,237	abr txt d	Circular slide rule for horse power of gears
1230	1913	Mez G	DE	16,444	abr txt d	A S in £sd
1231	1913	NCR	US	17,196	No	Cash register printing
1232	1913	Boss- Gonzelmann J	DE	17,518	abr txt d	Add columns
1233	1913	Trinks F	DE	17,520	No	pinwheel
1234	1913	Montessori M	IT	17,890	abr txt d	Abacus
1235	1913	NCR	US	18,277	No	Cash register
1236	1913	NCR	US	18,278	No	Cash register
1237	1913	Masch Fabrik MoenusAG	DE	18,752	abr txt d	Area of hides
1238	1913	Adderator A B	SE	18,763	abr txt d	Adder
1239	1913	Adderator AB	SE	19,089	abr txt d	Adder
1240	1913	Trinks F	DE	19,300		Pin wheel
1241	1913	Faguer LM	FR	20,372	No	Add print
1242	1913	Esnouf A	MS	20,424	abr txt d	Slide rule for strut loads
1243	1913	Siemens Bros	DE	20,907	abr txt d	Trig Vectors
1244	1913	Holloway W M	US	21,049	abr txt d	Adder
1245	1913	NCR	US	21,170	No	Ticketing machine
1246	1913	Trinks F	DE	21,512	No	Pin wheel machine
1247	1913	Smith A E	GB	21,879	abr txt d	Tabular calculator cylinder type for wages
1248	1913	Ehrich P	DE	21,915	abr txt d	Abacus.teaching

#	Year	Patentee	Country	Pat Number	Copied	Descr
1249	1913	NCR	US	21,968	No	Cash register
1250	1913	Grant HCJ	GB	22,117	abr txt d	Plotting board
1251	1913	Agnew R F	GB	22,165	abr txt d	For cloth manufacturers, also calculating the weight of paper and other materials.
1252	1913	Field R	GB	22,265	No	Cash register
1253	1913	Bunzel-Delton-Werk	AH	23,575	abr txt d ref	Multiply Divide with two totalizing counters
1254	1913	Trinks F	DE	23,689	abr txt d	Transfer mechanism
1255	1913	Teetzmann & Co	DE	23,816	abr txt d	Multiplying with setting slides
1256	1913	Bunzel-Delton-Werk	AH	24,064	abr txt d	Mod to 23575/1913
1257	1913	Bunzel-Delton-Werk	AH	24,381	abr txt d	Multiplying transfer mechanism
1258	1913	Schacht & Westerich	DE	25,947	abr txt d ref	Slide rule with square, cube scales etc
1259	1913	Powers Accounting Mach Co	US	26,896		Punch card
1260	1913	NCR	US	27,655	No	Adder
1261	1913	Gatewood & McAdams	US	28,399	No	Adder
1262	1913	Fearn & Martyn	GB	28,461	abr txt d	Abacus
1263	1913	Sloan R H	US	28,662	abr txt d	Tabular calculator for wages-mechanised
1264	1914	Heath W R	US	829	No	Adder
1265	1914	Dicker S G S	US	830	abr txt d	Statistical machine
1266	1914	Wanderer -Werke	DE	869	No	A S Print sub totals
1267	1914	Pivoda F	AH	1,782	abr txt d	Dics days between dates & A S
1268	1914	Schaller C	DE	2,007	abr	ASMD machine, keys, carriage
1269	1914	Krog F A	NOR	2,064	sbr txt d	Tab calc, sheet on rollers Wages
1270	1914	Masch Fabrik Moenus AG	DE	2,185	sbr txt d	Area of hides
1271	1914	Fowler W H & H	GB	3,638	abr txt d	First Fowler calculator with two knobs on the rim of the circular calculator.
1272	1914	Walker	US	10,499	abr txt d	Adder printer
1273	1914	Lee J & Bottomley F J	GB	11,030	abr txt d	Slide rule for calculating toothed wheels
1274	1914	Johnstone T	GB	13,747	abr txt d	Plane Trig calc
1275	1914	McIndoe J	ZA	13,796	abr txt d	Tabular calculator using bands between rollers
1276	1914	NCR	US	14,052	abr txt d	Intermediate actuators
1277	1914	Fowler H	GB	15,990	abr txt d	Single sided circular calculator with a single knob on the rear face, and a rotatable rim
1278	1914	Hudson J F	GB	18,341	abr txt d	Plane trig
1279	1914	Enberg J C	SE	19,145	abr txt d	Machine multiply partial products
1280	1914	Enberg J C	SE	19,146	abr txt d	Add & Cash register
1281	1914	Hook E T	GB	19,638		Trig calc
1282	1914	Myles E	GB	20,941	full	Tab calc to price meat

#	Year	Patentee	Country	Pat Number	Copied	Descr
1283	1914	Enberg J C	SE	21,646	abr txt	Coins for a wage list Key driven
1284	1914	Schulze W H	DE	21,776	No	Hide area by suction
1285	1914	Mason J H	GB	21,832	abr txt	Adder concentric disks
1286	1914	Robertson T	AUS	21,924	abr txt	Slide rule for design of ships
1287	1914	Powers Accounting Machine Co	US	22,359	abr txt d	Statistical machine
1288	1914	Addometer Corp	US	22,412	abr txt d	Adder
1289	1914	Burt E A P	GB	23,620	abr txt d	Measuring & calculating rod
1290	1914	Lilly W E	GB	23,968	abr txt d	Cylindrical slide rule
1291	1914	White Adding Machine Co	US	24,026	abr txt d	Adding Keyboard interlocks
1292	1914	Jeffry C S	BURMA	24,239	abr txt d	Slide rule for vacuum efficiency of a condenser
1293	1914	Burroughs	US	24,494	abr No	Adder
1294	1914	Venturino M E	GB	24,833		Plane trig calc
1295	1915	Burroughs	US	6	abr No	Adder
1296	1915	EWilliams R N	GB	2,384	abr txt d	Alpha punch card
1297	1915	Venturino M E	GB	2,623	abr txt d	Tab calc
1298	1915	NCR	US	2,642	No	Cash register
1299	1915	Spicknall M O	GB	2,857	abr txt d	Slide rule combined pen or pencil
1300	1915	Grard H J B	FR	3,501	abr txt d	area of skins
1301	1915	Wlilliams RN	GB	3,829	abr txt d	Add punch cards
1302	1915	Burroughs	US	4,131	No	Adder
1303	1915	Barr & Stroud Ltd	GB	4,651	abr txt d	Gun sight corr. Prop calc
1304	1915	Mather J C	GB	5,158	abr txt d	Proportional calculator lazy tongs
1305	1915	Barr Bell Bramston	GB	5,674	No	Adder
1306	1915	Barr Bell Bramston	GB	5,675	abr txt d	Adder electric Adder
1307	1915	May's Accounting Mach Co	US	5,953	No	Adder
1308	1915	NCR	US	6,218	No	Cash register
1309	1915	NCR	US	6,219	No	Cash register
1310	1915	NCR	US	6,220	No	Cash register
1311	1915	Martin H A	US	6,359	No	Cash register
1312	1915	NCR	US	7,029	abr txt d	Cash register printing
1313	1915	NCR	US	7,032	abr txt d	Zeroizing key
1314	1915	Callenders' Cable	GB	7,269	abr txt d	Slide rule for electric calcs
1315	1915	NCR	US	7,339	No	Cash register
1316	1915	Sawyer F L	US	7,452	abr txt d	Plane trig
1317	1915	Powers & Waterbury	US	7,800	abr txt d	Test punched cards accuracy
1318	1915	Hanks F A	GB	8,031	abr txt d	Trig calc aircraft spotting
1319	1915	Odell & Doanst	CAN	8,034	abr txt d	Punch cards for wages
1320	1915	NCR	US	8,119	No	Cash register
1321	1915	NCR	US	8,120	No	Cash register

#	Year	Patentee	Country	Pat Number	Copied	Descr
1322	1915	NCR	US	8,122	No	Cash register
1323	1915	Rheinische Metallwaaren	DE	8,181	abr txt d	Range finder
1324	1915	Addometer Corp	US	8,513	No	Adder
1325	1915	Addometer Corp	US	8,613	No	Adder
1326	1915	Whyman& Ross	GB	9,088	abr txt d	A&S Angles artillery
1327	1915	Addometer Corp	US	9,572	No	Adder
1328	1915	Simone M G de	US	9,738	abr txt d	Add & analyse wages for coins
1329	1915	Underwood J T	US	11,254	No	Adder on type writer
1330	1915	Sperry Gyroscope Co	US	11,655	abr txt d	Spiral slide rule for artillery ranges
1331	1915	Addometer Corp	US	12,460	No	Transfer mechanism
1332	1915	Burroughs	US	12,527	No	Adder
1333	1915	Harvey C J	GB	12,793	abr txt d	Prop calc for percentages
1334	1915	Spurgeon J	US	12,823	abr txt d	Multiplying by partial products
1335	1915	Galetti G	US	12,893	No	Local time calculator on endless sheet
1336	1915	Brown W F	GB	12,966	abr txt d pic	Multi rule for metal weights & costs
1337	1915	Coddington F J O & Livens G H	GB	13,759	abr txt d pic	Tabular calculator for wages
1338	1915	Williams- Ellis MI	ZA	13,887	abr txt d pic	Circular slide rule for artillery
1339	1915	Essmann A	DE	15,100	abr txt d pic	A S M D & print machine
1340	1915	White & Cook	GB	15,356	abr txt d pic	Tab calc Anti aircraft guns
1341	1915	BallL F	X	15,616	abr txt d pic	Tidal calc
1342	1915	Drucquer J	GB	15,842	No	Cash register illum kbd
1343	1915	Scurfield G G G	GB	16,876	No	Prop calc for colour depth
1344	1915	Howgrave- Graham R P	GB	17,309	abr txt d pic	Plane trig calc
1345	1915	Spicknall M O	GB	17,440	abr txt d pic	Hollow slide rules to hold compasses
1346	1936	Davies A E	GB	494,898		A machine for completing interest or dividend notices and warrants and other documents In £sd
1347	1915	Arentz C A	NOR	100,175		Departure rule
1348	1915	Burroughs	US	100293	No	Adder
1349	1916	NCR	US	100,568	No	Cash register
1350	1916	NCR	US	100,569	No	Cash register
1351	1915	NCR	US	100,570	No	Cash register
1352	1915	Chateau Freres	FR	101,013	abr txt d pic	Mod to Odhner type
1353	1916	Davis & Son	GB	101,051	abr txt d pic	Slide rule design with celluloid
1354	1915	Frey E H Flury A	CH	101,705	No	Stylus Adder
1355	1915	Powers J	US	102,150		Tabulate & add pcs
1356	1915	N C R	US	102,480	No	Adder for Tickets
1357	1916	Underwood J T	US	104,354	No	Adder on typewriter
1358	1916	Powers J	US	104,703	No	Statistical

#	Year	Patentee	Country	Pat Number	Copied	Descr
1359	1917	Baxendall D	GB	105,371	abr txt d	Spherical Trigonometry calculator
1360	1916	Chateau J D C	FR	105,724	No	Odhner type
1361	1916	Peters H C	US	105,928	No	Adder
1362	1917	Bridge N C	GB	106,246		Area computing
1363	1916	Holophane Ltd	GB	107,228	abr txt d pic	Circ slide rule for lighting
1364	1916	Rockford Milling Machine Co	US	107,403	abr txt d pic	Adder- multiply by repetition
1365	1916	Paul R H	AUS	107,416	No	Card Game scorer
1366	1916	Zona E	IT	107,529	No	Station pointer
1367	1916	Hemmi J	JAP	107,562	abr txt d pic	Sun-Hemmi patent.
1368	1916	Sharp H S	GB	108,005	abr txt d pic	Screw design
1369	1916	Stokes G D C	GB	108,172	abr txt d pic	Gunnery rule
1370	1916	Martin A J	GB	108,197	abr txt d pic	3 scale Slide rule with scales for wireless telegraphy
1371	1916	Morin,-Boyelle G	FR	108,460	abr txt d pic	Slide rule for hardness of metals
1372	1916	NCR	US	108,722	No	Cash register
1373	1916	Jackson Bros Ltd	GB	109,107	abr txt d pic	Cardboard slide rule with celluloid cursor
1374	1916	Burroughs	US	109,118	No	Adder
1375	1916	Glaser W H	GB	109,330	abr txt d pic	Vernier for slide rules
1376	1916	Underwood Computing Machine Co	US	109,994	No	Adder on typewriter
1377	1917	Shephard H	GB	110,851	abr txt d	Adder for workmen's time - . Roller
1378	1916	Duckham, Sir A M	GB	110,984	abr txt d	Proportional calculator
1379	1916	Kidd G W	GB	111,121	abr txt d	Proportional calculator for ship
1380	1916	Remington Typewriter Co	US	111,729	abr txt d pic	Multiplying using partial products , quarter squares
1381	1916	Giot H L V D	FR	112,012	abr txt d pic	Spherical trig calc star map & disks
1382	1916	Nicole P	CH	112,416	abr txt d pic	Proportional calculator
1383	1916	Printz O A K	SE	112,455	abr txt d pic	Adder
1384	1917	Crutchley C F	GB	112,530	abr txt d pic	Sliding rule for piano tuning
1385	1917	Christie R A	GB	112,681	abr txt d	Circular slide rule for artillery
1386	1917	Dodson A F	US	112,719	abr txt d	Tabular calculator on sheet or roll
1387	1917	Graham T	GB	112,822	abr txt d	Apparatus for ship's stability
1388	1917	Manson J L	GB	114,321	abr txt d	Slide rule for metal springs
1389	1917	Blaustein J	US	115,029	abr txt d	Adding key set lever operated
1390	1917	Buchanan W S	GB	115,207	abr txt d	Slide rule for output of paper making machine
1391	1917	NCR	US	115,447		Autographic Cash recorder
1392	1917	Davis John & Son	GB	115,981	espace	Adjust tension in slide rule
1393	1917	Chew A C	GB	117,318	abr txt d	Slide rule for trigonometry
1394	1917	Arton S	SE	117,463	abr txt d	Adder
1395	1917	Burroughs	US	117,912		Adder
1396	1917	Crawford E N	US	117,982	abr txt d	Tab calc for length material

#	Year	Patentee	Country	Pat Number	Copied	Descr
1397	1917	Hollerith H	US	117,985		Statistical
1398	1917	Hollerith H	US	118,455		Statistical machines of the Hollerith type.
1399	1918	Printz O A K	SE	119,818		Adder printer
1400	1917	Eastwood W	GB	120,980	abr txt d	Circular rule + watch, pedometer, volumeter, barometer
1401	1917	Allaun C	US	120,985	abr txt d pic	Tabular calculator-the educated monkey
1402	1918	Banwell E	GB	121,009	abr txt d	Tabular calculator for wages &c Rotating disk
1403	1918	Buchananan W S	GB	121,066	abr txt d	Multi slide rule for paper sizes
1404	1918	Mackrzie K D , Braby & Co	GB	121,677		Tabular calculators.-Apparatus for finding the logarithms and anti-logarithms of numbers has a cylinder a on which is printed in the usual way a table of logarithms,
1405	1918	Kennedy J F	GB	122,087	abr txt d	Gunnery calc
1406	1917	Jowett & Squire	GB	122,435	abr txt d	Drums carrying printers to solve equations
1407	1919	Cox C H F	GB	122,900		Ready Reckoner price by weight
1408	1918	Poor C L	US	123,989	abr txt d	Circ slide rule spher trig
1409	1918	Stamper J	GB	124,119	abr txt d	Tab calc
1410	1918	Fergusson J C	GB	124,245	abr txt d	Circ slide rule tig
1411	1916	Optalyte Ltd	GB	124,787	no	Plane trigonometry calculators; tabular calcula- tors. -A diagram for use in dividing
1412	1918	Bathurst A A	GB	128,811	abr txt d	Trig calculator
1413	1919	Crompton J & Gallagher W	GB	128,878	abr txt d pic	slide rule device for thermal efficiency of steam plant
1414	1918	Hill H W	GB	129,372	abr txt d	Gunnery calculator anti-aircraft
1415	1918	Jackson T	GB	129,533	abr txt d	Slide rule spring device
1416	1919	Jackson T	GB	129,600	abr txt d pic	Tin plate rule. See Omnes
1417	1918	Claxton JO	GB	130,206		Log scale on cylinder for aeroplane navigation
1418	1918	Gladstone J H	GB	131,160		Log calc chart
1419	1919	Windle E	GB	133,577	abr txt d pic	Trig calculator with slide rule
1420	1919	Santen H H van	NL	133,622	abr txt d	Computing scales for wages
1421	1919	Marion et Cie	FR	133,629	abr txt d	Tab calc for plane trig
1422	1918	Billeter M & Bohnhorst A	CH	133,682	abr txt d	Logarithmic calculator on two books and roller
1423	1917	Barr & Stroud Ltd	GB	133,974	abr txtd	Gunnery calc, geared
1424	1918	Odhner V J	SE	134,221		Zeroizing
1425	1916	Douglas H P & Appleyard R	GB	134,558	abr txtd	Log calculator for range finding
1426	1919	Tidswell H R	GB	134,752	abr txtd	Tab Calculator for sex of children before birth
1427	1918	Zenith	CH	134,833		Circ slide rule with wheel drive rive
1428	1918	Angus T C	GB	135,646	abr txtd	Plane trig calculator
1429	1918	Martin W H	GB	135,671	abr txtd	Poly Slide rule for steel sections

#	Year	Patentee	Country	Pat Number	Copied	Descr
1430	1919	Walls R R	GB	136,043	abr txtd	Harmonic analysis by pendulum
1431	1919	Smith E W	GB	136,090	abr txtd	Slide rule construction
1432	1919	Watkins A	GB	136,093	abr txtd	Slide rule reading aid
1433	1918	Odhner V J	SE	136,150	No	Pin wheel
1434	1916	Appleyard R	GB	136,179	abr txtd	Spiral slide rule for heights
1435	1919	Appleyard R	GB	136,180	abr txtd	Plane trig calculator
1436	1917	Appleyard R	GB	136,181		Slide rule for airspeed
1437	1919	Appleyard R	GB	136,182	abr txtd	Log calculator for damped vibrations
1438	1919	Appleyard R	GB	136,183	abr txtd	Plane trig calculator torpedos
1439	1918	Autokal Syndicate	GB	136,628	abr txtd	Multiplying pricing machine
1440	1918	Autokal Syndicate	GB	136,629	No	Mult & Div
1441	1918	Autokal Syndicate	GB	136,630	abr	Add, multiply combined with typewriter
1442	1919	Original-Odhner	SE	138,095	No	Pin wheel
1443	1919	Original-Odhner	SE	138,096	No	Pin wheel
1444	1919	Original-Odhner	SE	138,097	abr txt d	Log calc chart for P V Tof gases
1445	1917	Blaustein J	US	139,201	No	Adding with plates
1446	1920	Blaustein J	US	139,202	No	Adding with plates
1447	1917	Blaustein J	US	139,203		Adding with plates
1448	1919	Chew A C	GB	139,340	abr txt d	Slide rule with rack & pinion
1449	1919	Vermehren J	NL	139,576		Multiplying
1450	1919	Clauson A E	ZA	142,212	espace	Tab calc for non decimal
1451	1919	Trinks F	DE	143,884	abr	Gadget for pinwheel
1452	1919	Winzar O G	GB	143,964	abr	slide rule with transparent sheet
1453	1919	Bloch G	DE	146,948		Proportional calculator for machine tool cutting times
1454	1920	Trinks F	DE	147,112	abr	Adding printing
1455	1920	Trinks F	DE	147,113		Adding
1456	1920	Thompson S P	US	147,285	abr	Tabular calculator sheets on rollers USA
1457	1920	Smith Eden Co	GB	147,306	abr	Tabular calculator see 2189/1913
1458	1920	Winzar O G	GB	147,366	abr	Long slide rule with cut up scales for non-decimal units see 143964
1459	1920	Trinks F	DE	147,467	abr	Rack bar
1460	1920	Schaller C	DE	147,468	abr	Multiply See 2007 of 1914
1461	1920	Kubler C	DE	148,455	abr	Reversible stylus slide Adder
1462	1920	Bygrave L C	GB	150,103	abr	Plane trig calculator for aircraft
1463	1920	Fournier L & Mang G	FR	150,351		Multiplying with spring energy store Thomas type
1464	1919	Baker WF, Burns S B	GB	151,670	abr	Log calculator for wages with 3 co-axial cylinders
1465	1920	Original Odhner	SW	152,553		ASMD
1466	1920	Krems O	AT	154,607	abr	Multiplying bars for interest
1467	1920	Krems O	AT	154,608	abr	Addition to 154607
1468	1920	Pletts J St V	GB	154,756	abr	Slide rule for log & exp
1469	1920	Tallmadge C H	US	155,329	abr	Subtraction with punch cards

#	Year	Patentee	Country	Pat Number	Copied	Descr
1470	1921	Best H & Booth C H	GB	155,344	abr	(Alternative slide rule for beam loading
1471	1919	Monroe	US	157,841		zeroizing
1472	1921	Anderson Sir F J	GB	160,186	abr	Circular sr flat spiral See 22762/1903
1473	1921	Original Odhner	SE	160,703		ASMDF Full stroke mechanism
1474	1920	Original Odhner	SE	161,848		ASMD
1475	1921	Bygrave L C	GB	162,895		Log helical calculator for spherical triangles
1476	1921	Dring & Fage	GB	164,442		Slide rule for proofing, blending and reducing wines and spirits.multi-slide
1477	1921	Hultgren P D	SE	166,053	abr	Tabular calculator for timber volumes , with a book
1478	1921	Peirce J R	US	166,056		Punch card machine
1479	1920	Cooke & Sons Ltd	GB	166,173		Position finder artillery
1480	1921	Cheng Wen-Chi	CHIND	166,642		Adder with circular stylus entry
1481	1920	Wanderer Werke	DE	166900		Adder on typewriter
1482	1921	Straub A & Hochstrasser A	CH	167,099		Poly-slide rule for thread cutting
1483	1921	Darnley P H & Richards B	GB	167,699	pic	Teaching device 2 tabulated cylinders
1484	1921	Norbury H	GB	167,788		Tabular calculator for paper weights
1485	1920	Dawson & Buckham	GB	167,801		Device for laying guns
1486	1921	Brotherton H & F	GB	167,843		Logarithmic calculator with pointers circ sr
1487	1920	NCR	US	168,013		Issue tickets
1488	1920	Grimme Natalis	DE	171,687		Pin wheel with carriage
1489	1921	Kubler C	DE	172,909		Adder Improvement to 148555
1490	1922	Daemen V	DE	174,369		Cylindrical rule with rods
1491	1920	Bartholomew B	ZA	174,438		Tabular calculator Interest etc
1492	1922	Bliss Co, EW	US	175,064		circular slide rule for pressing sheet metals
1493	1921	Grand Rapids Show case Co	US	177,040	abr	Tabulator calculator for a bolt of cloth
1494	1921	Hersee H	GB	177,093	abr	Adder
1495	1922	Palmer W T	GB	177,411		circular slide rule weight & cost of metal sections
1496	1922	Odier	FR	177,796		Circular slide rule lat spiral for money conversion
1497	1921	Capon R S	GB	178,273		Circular slide rule for ground speed of aircraft
1498	1921	NCR	US	178,417		Cash register
1499	1921	Guy's Calculating Machines Ltd	GB	180,536	abr	Signal for pin wheel
1500	1921	Appoullot L	FR	180,695	abr	Circular slide rule
1501	1921	Felt & Tarrantt	\US	181,043		Power driven comptometer
1502	1922	King O C F	GB	183,723	Ref	Helical slide rule
1503	1922	Doody W A	GB	184,208		Tab calc partial products
1504	1921	Krause R	DE	184,324		Adder with motor

#	Year	Patentee	Country	Pat Number	Copied	Descr
1505	1921	NCR	US	184,429		Statistical machine
1506	1921	Original Odhner	SE	185,419		Rounding results
1507	1921	Original Odhner	SE	186,071		Adapts 13700/4890 for non-decimal
1508	1921	Claeys A H	BE	187,236		Slide rule
1509	1922	Varren A	DE	187,614		Multiplying rollers in a frame
1510	1922	Beauvais G	FR	189,518		Spiral slide rule with gears
1511	1923	Gledhill A H	GB	193,610	abr	Tabular for article pricing
1512	1921	Gagliazzo C	IT	193,844	abr	Adder
1513	1922	Barr & Stroud Ltd	GB	194,124		Naval range finder
1514	1921	NCR	US	194,315	abr	Cash register
1515	1923	English Electric Co Ltd	GB	194,418	abr	Slide rule for electric loco performance
1516	1922	Oliver E H	GB	194,875		Apparatus for cutting up cheese, lard, soap, &c. accurately, by weight
1517	1922	Vanderveld A	US	194,891		pricing length of cloth
1518	1922	Anido A J	GB	195,286	abr	Slide rule for powers
1519	1929	Le Sort H T M	FR	195,644		apparatus for evaluating expressions involving a number of variables.
1520	1921	Chase G C	US	195,694	abr	M D for £sd
1521	1923	Burns W A	GB	196,001	abr	Convert weights etc slide tables
1522	1922	Original Odhner	SE	196,271		Movable carriage ASMD
1523	1922	Grimm Natalis	DE	196,286		Pin wheel, 2 counters
1524	1923	Faber	DE	196,589	abr	Slide rule
1525	1923	Chase	US	197,352	abr	Calc machine £sd
1526	1922	Joksch R	CZ	198,003	abr	Tabular calculator for integer multiplication
1527	1921	Barr & Stroud Ltd	GB	198,382		Range finder
1528	1922	Smith P B	FR	200,864		Circ slide rule for liquid conversions
1529	1923	Bicknell R S	US	201,653	abr	Slide card wool
1530	1922	Oswald E	CAN	202,137		tab calc days between dates
1531	1922	NCR	US	203,790	abr	Cash register
1532	1923	Sheringham Daylight Ltd	GB	203,862	abr	Slide rule for wagers
1533	1922	GEC	US	204,520		Circ Tab calc for gear wheels
1534	1922	Colville J L	AUS	204,784		tab calc on cards
1535	1923	Felt & Tarrant	US	207,070		Anti-error lock
1536	1923	Tillman F J	US	207,135	abr	Tabulator calculator for price of cloth yardage
1537	1923	Grey G W	SING	207,694	abr	Slide rule for reinforced concrete beams
1538	1922	King O C F	GB	207,762	abr txtd	Cyl slide rule
1539	1922	King O C F	GB	207,856	No	Cyl slide rule
1540	1923	Friden CMF	SE	207,858	abr	Calculating machine
1541	1923	McCulloch & Ray	GB	208,076	abr	Stresses on derricks
1542	1923	Tillman F J	US	208,183	abr	Tabulator calculator for price of cloth yardage

#	Year	Patentee	Country	Pat Number	Copied	Descr
1543	1924	Petters G B	GB	208,232	abr	Calculating Machine
1544	1924	Barr J M M	GB	208,737	abr	Multiply by partial products
1545	1924	Barr J M M	GB	209,493	abr	Multiplying device with steel balls
1546	1924	McDonald F &McHardy J D	GB	209,938	abr	Tabular calculator for newspaper space
1547	1922	Tullis & Son Ltd	GB	210,162		Slide rule for belting
1548	1922	NCR	US	210,164		Differential mechanism
1549	1924	Ralston S B	GB	210,265		Slide rule for ship's stability
1550	1920	OriginalOdhner	SE	211,420		ASMD re toothed actuator
1551	1924	Ostlind A J & Hagstrom K G	SE	211,623		Scale gadget for photography
1552	1924	Forshaw A	GB	211,669		Circular slide for gas lighting
1553	1923	Grimme Natalis	DE	212,897		Pin wheel
1554	1923	Frappant AG fur Prazisions und Feinmechanik	DE	213,238		Circular slide rule Concentric rings
1555	1924	Trinks F	DE	213,553		Calculating machine
1556	1924	Squire D F & Stringfield W T	GB	214,353		Tabular calculator by weight
1557	1923	BTM	GB	214,571		Punch card device
1558	1923	Soellner JB AG	DE	214,604		Slide rule cross section, magnesium alloy
1559	1923	Fowler W H & H	GB	215,648	espace	Improvement to3638/1914 the mechanism of a Fowler circular calculator.
1560	1923	Seguin L & A	FR	215,706		Adder
1561	1924	Brandstetter G	CZ	216,365	abr	Sectional slide rule
1562	1923	Automatic Scale Co Ltd	GB	217,324		Price computing scale cylinder
1563	1923	Broom & Wade Ltd	GB	218,712	abr	Circular slide rule for air compressors
1564	1923	Courage D G	GB	218,716		Anti aircraft gun controller
1565	1923	Felt & Tarrant	US	219,923		Traversable accumulator
1566	1923	Felt & Tarrant	US	219,936		Flexible connection
1567	1923	Felt & Tarrant	US	219,937		Zeroizing mechanism
1568	1924	Burns W A & Kidd B S	GB	223,096		Tabular calculator for interest etc.
1569	1924	Kooiman A	NL	224,796		Circular slide rule gun laying
1570	1924	Hewett J R	US	224,930		Tab calc for photo exposure
1571	1923	Muldivo Calc Mach Co Ltd	GB	225,253		Pinwheel with automatic carriage shift
1572	1924	Scurfield G G	GB	227,643		Slide rule with non-decimal scales, eg sterling
1573	1924	Brimfield T H	GB	227,750		Tabulator circular disc
1574	1924	Henning FW	GB	230,199	`	Helical slide rule- single cylinder
1575	1924	Simmond G M	GB	230,706		Circ tab calc handicap tennis
1576	1924	Fagerholm P E	SE	231,160		Log scales on gear wheels
1577	1925	Rosien/ NCR	US	231,868		Automatic ribbon reversing mechanism for Cash registers, calculating machines and the like
1578	1925	Chad Valley Co	GB	232,030		Calculator or score card
1579	1925	Edwards LE/ Davis & Sons	GB	232,037	abr	(Hopp: Patent slotted slide, John Davis & Son "Glider" slide rules).

#	Year	Patentee	Country	Pat Number	Copied	Descr
1580	1924	Fuss H	DE	232,150		Log scales on bands on drums
1581	1924	G rimme Natalis	DE	232,191	abr	Calc machine frame
1582	1925	Trinks F	DE	232,192		Pin wheel machine
1583	1925	Trinks F	DE	232,254		Calculating machine See 213553
1584	1925	Gristwood F	DE	232,383	abr	Circular sr for weights of paper
1585	1925	Uhlich R	DE	232,442		Slide rule with displaced scales
1586	1925	Trinks F	DE	232,566		Counters in calculating machines
1587	1925	Grimme, Natalis	DE	232,567		Tens transfer devices for Pin wheels
1588	1925	Baker J T	GB	233,175		Calculating instruments for problems in navigation
1589	1925	Wichmann Gebr mbh	DE	233,183		Circular sliderule
1590	1925	Krupp AG	DE	233,668		Differential actuating mechanisms for calculating machines
1591	1924	Gordon HF	GB	235,949		Calculating apparatus for nav problems involving drift, wind, and ground speed
1592	1925	Joksch F	CZ	236,165		Tabular calculating apparatus for use with weighing apparatus
1593	1925	Le Clair J A	CAN	236,803		Tabular calculator for timber area , drums
1594	1925	Jones WE	GB	240,206		Calculating device for the use of printers (Circular slide rule)
1595	1925	Friden C M F	SE	241,177		Calculating machine
1596	1925	Fischer J	DE	241,867		Automatic weighing balance& device for calculating the price of the material
1597	1925	Pecquet J H A	FR	241,908		Slide rule for vehicle speed
1598	1925	Rogers E	GB	244,893		Ready- reckoning device for the product. of weight and price per unit weight and a drum bearing lines of prices
1599	1925	Barr& Stroud	GB	245,977		Logarithmic calculator with gears
1600	1925	Bergman J	DE	246,134		Adding and sub tracting apparatus combined with a book of multiplication &c. tables
1601	1925	Wallace & Holban	GB	246,378		Tabular calculator for use in calculating interest &c.
1602	1926	Legros,L A	GB	247,314		Logarithmic calculator with geara, cams. Gives mile/gallon from mph, gals/hr
1603	1926	Ellsworth	AUS	247,543		Tabular calculator for wages
1604	1926	Moir Corp	US	247,804		Tabular calculator for interest
1605	1926	Poggi & Emanuele	IT	248,620		Computing scales with intersecting curved and straight lines; tabular calculator
1606	1926	Clark H D	G B	249,784		Tabular calculator
1607	1925	Joksch & Perl	AT	250,046		Tabular calculator has a polygonal frame with the multiplication tables 19 say weight and price per unit

#	Year	Patentee	Country	Pat Number	Copied	Descr
1608	1926	Buchanan-Wollaston H J	GB	253,249		Calculator for scale drawing based on similar triangles
1609	1926	Addison Luard	GB	253,758		Addison Luard Course and Wind calculator, circular slide rule made by Hemley Hughes Ltd.
1610	1926	Coursey PR	GB	254,153		Slide rule for HF Circuits
1611	1925	Egger Hansen S S	AT	255,471		Weighing scale which automatically indicates, at both sides of the machine, the total cost of the goods
1612	1926	Robinson & Lancashire Optical Mfg Co Ltd	GB	256,903	Ref	Watch slide rule for textile calcs
1613	1926	Quijano	MEX	257,931		Multiply Cards for use with mech Adders
1614	1926	Schauer	POL	259,112		Slide rule pencil
1615	1926	Hamilton J B	CAN	259,460		Adding and subtracting instrument for determining the days between dates has two pairs of scales, mounted on a " slide-rule " type of instrument
1616	1926	Quijano	MEX	260,610		Tables on discs to multiply
1617	1927	Sabatini	IT	265,752	pic	Tabular cylinder calculator for cement
1618	1927	Organ E G	GB	265,798		Tabular calculator for betting
1619	1927	Egger Hansen S S	AT	266,349		Multiply Cards
1620	1927	Egger Hansen S S	AT	266,350		Tabular calculator (weighing scales)
1621	1927	Haynes	GB	268,243		Slide-rules. - The relationship between wave-length, inductance and capacity is represented by rela tively movable logarithmic scales ap-plied to a circular slide-rule or the adjusting dial of a condenser
1622	1926	Butterfield J E C	CAN	269,018		Slide rules of the cylindrical type. The inner member is rigid and of elliptical or similar cross-section and the outer member is flexible and transparent
1623	1927	Humphreys A G	GB	271,335		Tabular calculator
1624	1926	Lindholm H V F	SE	275,457		Adding-apparatus with numeral-carrying, style-adjusted slidable bars
1625	1926	Woodman T C	GB	276,094		Tabular appliances.- A device for computing counts, weights, &c. relating to the manufacture of woven fabrics
1626	1926	Orchard H B	GB	278,806		Tab calc plates
1627	1927	Tanton S	EST	279,356		Tab calc £sd to fractions
1628	1927	Faber-Castell	DE	280,177		slide rule with magnifying lens

#	Year	Patentee	Country	Pat Number	Copied	Descr
1629	1926	Jellinek &Beer	AT	280,204		M & D for determining areas and cubical contents from direct linear measurements,has a cylinder rotated by the running-out of the measuring tape and adapted to produce a movement of the indicator proportional to the sum of the logarithms of the measurements.
1630	1927	Heavey G P	GB	280,703		Tabular calculator for petrol pumps
1631	1928	Eyre & Spottiswoode	GB	283,003		Slide rule construction
1632	1927	Govare & Salomon	FR	283,175		A quotient is evaluated by rectilinear movements along parallel paths proportional to the logarithms of the dividend and divisor and thence deriving the difference of the logarithms by a parallel motion mechanism.
1633	1928	Achmuty & Rothes Paper Mills	GB	284,445		slide rule weight of paper
1634	1928	Fiacchi F	IT	285,322		Cylindrical slide rule
1635	1928	Nestle Australasia	AUS	285,383		Circular slide rule
1636	1927	Ansermot J	CH	290,181		Surface areas, computing; tabular calculators
1637	1928	Brosch	CH	290,746		Cylinder slide rule for £sd
1638	1928	Faxen	SE	292,223		Circular slide rule
1639	1927	Leslie P R	AUS	296,092		Tabular calculators; multiplying -apparatus. - A device for ascertaining the cost of a job
1640	1927	Hartley H E	GB	300,715		Tabular calculators. Cost of variable quantities of petrol or other commodity
1641	1928	Preston E & Sons Ltd	GB	302,209		Slide-rule cursor formed from sheet metal blank
1642	1928	Rogers	GB	302,762		Tabular calculator Drum type
1643	1929	Herzstark J	AT	305,579		Adder printer
1644	1929	Huber	AT	307,072		Troncet pocket Adder
1645	1928	Arnold F	GB	307,254		Tabular calculators. - The true lengths of courses shown on a mercator or like chart are determined by means of a series of scales
1646	1928	Hamilton R M	GB	307,816		Log scales for the TOTE
1647	1929	Tissier	FR	311,414		Circular wages calculator
1648	1929	Podtjagin, M. E.	RU	314,609		Cylindrical form of slide-rule has an outer transparent cylinder and an inner cylinder both bearing logarithmic scales divided into sections
1649	1928	Goldbeck H J	AUS	316,398		Tab calc for wages

#	Year	Patentee	Country	Pat Number	Copied	Descr
1650	1930	de Whalley L J	GB	322,943		Circular slide rule for sugar boiling
1651	1930	Ruxton Multi-Vider Corp	US	325,357		Slide rule pencil
1652	1930	Macintosh Chas. & Co	GB	326,860		Slide rule Belting
1653	1930	Wilkins	GB	327,992		Partial multiplier
1654	1930	Odegaarden	NOR	328,455		Slide rule discs
1655	1930	Storey	GB	329,231		Ship's trimming
1656	1930	Sabatini	IT	331,819		Circular slide rule for concrete
1657	1929	RAE Farnborough	GB	332,373		Circular slide rule air speeds
1658	1930	Lewis & Taylor Ltd	GB	335,379		Slide Rule for calculating data connected with belting.
1659	1930	Garwood T	GB	337,487		Cylindrical slide- rule with a six-sectioned logarithmic scale' for co-operation with a cage-like sleeve carrying a similar scale.
1660	1930	Hocken & Cox	GB	339,638		Logarithmic calculators; totalizators
1661	1928	Farbenindustrie A G	DE	339,862		Tab calc for dye mixes
1662	1930	Kyberd A T	GB	339,984		slide rule cursor
1663	1930	Wendling	FR	340,013		Apparatus for calculating products and quotients of simple factors or of factors raised to a power incorporates two toothed cams
1664	1930	Original odhner	SE	340,230		Ten key calculator
1665	1929	Ellis Adding type writer Co	US	340,256		Adder
1666	1931	Jones R W	GB	340,600		Circ slide rule for height of an aircraft
1667	1931	Burroughs	US	343,060		Adder
1668	1931	Jung H	DE	343,323		Abacus, educational
1669	1929	NCR	US	344,054		Cash register
1670	1931	Krupp A G	DE	344,084		Cash register
1671	1929	Monroe	US	344,459		Calc machine
1672	1929	Felt & Tarrant	US	344,868		Adder
1673	1931	Siemens A G	DE	344,919		Punch card
1674	1929	Krupp A G	DE	345,029		Adder
1675	1929	Monroe	US	345,132		calculator Key board
1676	1929	Western Electric	US	345,655		Multiplying machine
1677	1929	Hofer R C	CH	345,952		Thomas or Monroe type and modified for dealing with British currency
1678	1929	Burroughs	US	345,967		Add subtract
1679	1930	Monroe	US	346,093		calculator
1680	1930	Monroe	US	346,362		calculator
1681	1930	Wanderer Werke	DE	347,456		Adder
1682	1930	Brunsviga	DE	347,938		Pin wheel

#	Year	Patentee	Country	Pat Number	Copied	Descr
1683	1929	Western Electric	US	348,043		Electrical multiplying apparatus has a continuously rotating partial product commutator built up of discs carrying contacts representing, by their cyclic position, the partial products.
1684	1930	Carroll F M	US	349,504		Totalizer
1685	1931	Balance G T	GB	350,864		Tabular calculator Slide card currency conv
1686	1930	Sundstrand	US	351,007		Totaliser
1687	1929	Burroughs	US	351,086		Adder
1688	1930	Rudin K V	SE	351,276		Pin wheel
1689	1931	Elektrische .Apparat Gmbh	DE	351,305		Calculating apparatus for directing firing.
1690	1930	Marchant/Friden	US	351,667		ASMD
1691	1930	Monroe	US	351,698		Adder
1692	1931	Cowper J	GB	352,079		Mech Circ SR weights & prices metal plates uses discs
1693	1931	Zeiss, C	DE	352,470		Apparatus for transforming co-ordinates
1694	1930	Monroe	US	352,731		Non decimalmachine
1695	1930	Ball & Huntley	GB	352,958		Adder
1696	1930	Monroe	US	353,242		Adder
1697	1931	Ellis Adding Typewriter Co	US	353,877		Calculating and similar machines
1698	1930	Douchkoff D	GB	353,904		Concentrically mounted discs each connected to a drum with numbers around its periphery corresponding to apertures arranged near the circumference of the discs, and means of interconnecting the drums.
1699	1930	Monroe	US	354,175		Adder
1700	1931	Askania werke	DE	354,178		Nomographic calculating apparatus applicable for use in gunnery and other calculations
1701	1930	Boutet R E	FR	354,916		Typewriting and computing machine combination wherein the typewriter keys are connected by electrical circuits and electro-magnets with the keys of the calculating machine
1702	1930	Monroe	US	354,956		M D
1703	1930	Schmid A	AT	354,985		Apparatus for ascertaining the number of days between two dateshas two bands on each of which the days of the year are inscribed
1704	1931	Stelfox S H	GB	356,434		Slide rule with folded slide see earlier
1705	1931	Monroe	US	357,982		transfer mechanism

#	Year	Patentee	Country	Pat Number	Copied	Descr
1706	1931	Monroe	US	358,169		transfer mechanism
1707	1931	Cross E	GB	358,212		Circular SR prices & weights
1708	1930	Tucker G M	GB	358,552		Tab calc bridge scorer
1709	1931	Soc. des Fab Ind	FR	358,835		calculating device for use in aerial navigation plate & disc
1710	1930	Stephenson S W	GB	359,210		abacus teaching
1711	1931	Stephens S W	GB	359,210		Abacus for teaching
1712	1931	Beddington T A H	GB	359,578		Circular slide-rule for totalizator calculations
1713	1930	Monroe	US	359,750		M D
1714	1931	PettersLtd	GB	360,375		Calculating or adding machine
1715	1931	Petters GB	GB	360,377		Calculating or adding machine
1716	1931	Svensson	SE	360,842		Four-Total Adder
1717	1931	Lovatt W M	GB	360,854		Circ SR for projectile deflection
1718	1930	Monroe	US	361,146		Multiplier
1719	1931	Mercedes	DE	361,484		Combined type- writing and computing machine for non-decimal currencies
1720	1931	Mercedes	DE	362,433		Combined type- writing and computing machine
1721	1932	Wadley A E	GB	362,527		Printing Double entry machine
1722	1932	Mercedes	DE	363,049		Card-punching machine controlled by the keys of a typewriter
1723	1932	Marchant	US	363,470		Multiplying and dividing apparatus.-A power-driven machine with a laterally movable totalizing- counter carriage
1724	1931	Rheinische metall waaren	DE	363,974		motor driven multiplier
1725	1930	Mercedes	DE	364,205		Adder
1726	1932	Brierly H O	GB	364,298		Circ Slide rule with concentric rings
1727	1932	Accounting and Tab Corp of GB Ltd	GB	364,612		Account storing machine
1728	1932	Accounting and Tab Corp of GB Ltd	GB	364,638		Accounting machine
1729	1932	Accounting and Tab Corp of GB Ltd	GB	364,639		Accounting machine
1730	1932	Accounting and Tab Corp of GB Ltd	GB	364,640		Accounting machine
1731	1932	Accounting and Tab Corp of GB Ltd	GB	365,049		Accounting machine
1732	1932	Mercedes	DE	365,058		Calc machine
1733	1932	Anker werke	DE	365,164		Accounts machine
1734	1932	Corner J A	GB	365,720		Device to print petrol pump receipts

#	Year	Patentee	Country	Pat Number	Copied	Descr
1735	1930	Waldstein N	DE	366,203		Electrical calculating apparatus has pairs of relatively slidable contact bars by the setting of which,a circuit is selected that includes the result
1736	1932	Mercedes	DE	367,486		Adder
1737	1932	Seehase H	DE	367,993		Slide rule construction
1738	1932	Heering H	DK	368,009		Bridge scorer
1739	1932	Burroughs	US	368,254		Adder
1740	1930	Gustafsson & Helloren	SE	368,311		ASMD of the ten-key set and independently operated type and has a stationary Totalizer and quotients counter and a slidable selector
1741	1931	Sandersen & Lundback	DK	368,991		Cylinder dervice for fodder diet
1742	1931	Burroughs	US	370,053		Adder
1743	1932	James J	GB	370,060		Abacus with gearing
1744	1930	Marchant	US	370,099		Mechanical multiplier
1745	1930	Rheinische metall waaren	DE	370,662		a multiplying-machine repeated- additions type, each factor is preliminarily set from the same ten-key keyboard on setting pins.
1746	1932	Varren A	DE	371,699		Printing zeros
1747	1932	Schubert	DE	372,633		Odhner type
1748	1932	Talbot B	ZA	372,746		Add Sub 2 discs, toothed drum
1749	1931	Braun E	DE	373,023		Relates diameter to cutting speed on lathe
1750	1932	Gibson C M	CAN	373,630		Log calc for TOTE horse racing
1751	1931	Remington	US	374,109		Computing type writer
1752	1931	Looney T C	GB	375,061		Circular Adder
1753	1931	Elliott-Fisher	US	376,985		Calculating type writer
1754	1931	Remington	US	377,430		Calculating type writer
1755	1932	McCowen W J	GB	377,515		Tabular calc device for petrol stations
1756	1931	Accounting and Tab Corp of GB Ltd	GB	377,957		Accounts machine
1757	1931	Accounting and Tab Corp of GB Ltd	GB	377,988		Accounts machine
1758	1931	NCR	US	378,042		Adder with indicator lamp
1759	1932	Mercedes	DE	379,811		Ten key calc machine
1760	1932	Mercedes	DE	379,822		Ten key calc machine
1761	1932	Vickers	GB	380,063		Gunnery calculator
1762	1932	Anschutz R	DE	380,106		Card punch
1763	1932	Husqvarna	SE	380,263		Complex SR for pipes
1764	1932	Goerz Optische Anstalt AG	CZ	380,326		Device for use in solving aerial- navigation problems has a base 1within which is rotatably mounted a ring having scales .

#	Year	Patentee	Country	Pat Number	Copied	Descr
1765	1932	Mercedes	DE	380,551		Combined typewriter and calculating machine is provided with two carriages
1766	1932	Brunsviga	DE	380,756		Multiplier
1767	1932	Burroughs	US	380,777		Adder
1768	1932	Vickers	GB	381,147		Apparatus for use in determining the course to be given to torpedoes
1769	1930	Tauschek	AT	381,345		Pinwheel
1770	1932	Faber-Castell	DE	381,395		Slide rule for resistance of copper conductors
1771	1932	Siemens	DE	381,562		Punching mechanism for calculating machines
1772	1932	Waghorn J D	GB	381,613		Slide rule for aerial navigation
1773	1932	Hall C W	GB	382,242		Circ Slide rule
1774	1932	Minas G	IT	382,257		Tab calc bridge scorer
1775	1932	Rheinische metall Waaren	DE	382,575		Pin wheel
1776	1932	Brunsviga	DE	383,250		Calc
1777	1932	Nederlandsche Instrument BV	NL	384,216		Apparatus for compounding speed components particularly for gunnery
1778	1932	Elliott Fisher	US	384,759		Comp type writer
1779	1932	Mahony J	GB	384,763		Disc for aerial navigation
1780	1931	Mercedes	DE	385,013		Computing type writer
1781	1932	Vickers	GB	385,331		Gunnery calc
1782	1932	Sundstrand	US	385,630		Ten key ASMD
1783	1932	Olivetti	IT	385,829		ASMD
1784	1932	Brunsviga	DE	386,147		Calc machine
1785	1932	Ellis Adding Typewriter Co	US	386,331		Calc type writer
1786	1932	Gorbatchevsky	FR	386,361		ASMD mechanical
1787	1932	Farrar	GB	386,848		Discs for interest calculation
1788	1933	Kubler C	DE	387,728		Linear stylus Adder mods
1789	1933	Burroughs	US	388,053		Adder
1790	1933	English F G S	GB	388,413		Statistical machines ; total taking ; adding and subtracting apparatus ; with several Totalizers
1791	1933	Mallock RRM	GB	389,524		Analog calculator using transformers
1792	1932	Gardner Co	US	389,630		Add print
1793	1932	Gardner Co	US	389,632		Add print
1794	1932	Gardner Co	US	389,719		Add print
1795	1931	Zookrow L	GB	389,910		Tab calc disc multiplier
1796	1933	Askutopoulos	GR	391,617		Slide rule plus surveying inst
1797	1933	Burroughs	US	391,869		Adder
1798	1932	Wells R E	AUS	391,949		Slide rule for TOTE
1799	1932	Burroughs	US	392,181		Adder
1800	1933	NCR	US	393,661		Adder
1801	1933	Goerz Optische	CZ	393,828		artillery calc

#	Year	Patentee	Country	Pat Number	Copied	Descr
1802	1933	Royal Arsenal Woolwich	GB	394,017		artillery calc
1803	1933	Mechanical scorers Ltd	AUS	394,203		Bridge scorer
1804	1931	Eggers F G H	GB	394,690		Account storing
1805	1933	Goerz Optische	CZ	394,895		re Pilot balloons
1806	1931	Campbell W H	GB	394,968		Solving problems re solutions &c. by graphic representation
1807	1931	Ellis Adding type writer Co	US	394,999		Many totalisers
1808	1931	Gustafsson	SE	395,106		Ten key calc
1809	1932	Senter F G	US	395,210		Mechanically dividing an integer into partshas an invariable scale the total working length of which is adjustable to be equivalent to the integer,
1810	1932	Burroughs	US	395,558		Adder
1811	1932	Burroughs	US	395,559		Adder Non decimal
1812	1932	Ellis Adding type writer Co	US	395,688		Adder
1813	1933	Astrawerke AG	DE	395,981		£sd Adder
1814	1933	Faber-Castell	DE	395,992		A slide-rule with divisions on both sides
1815	1932	Lewis & Tyler Ltd	GB	396,533		Slide rule .. Discharge water thru nozzles
1816	1933	Vickers	GB	396,850		Range finding
1817	1931	Couffignal P L	FR	397,528		ASMD machine
1819	1933	Thomas & Blamey	GB	398,535		Tabulating machine
1820	1933	Johnson & Pochin	GB	398,615		Games scorer dials
1821	1933	Cohen H	GB	398,912		Adder
1822	1932	Ohmoto T	JAP	400,947		Actuating device for the multiplier register of a calculating machine
1823	1932	Burroughs	US	400,967		Add print
1824	1932	Burroughs	US	400,968		tabulating Adder
1825	1932	Nederlandsche Instrument	NL	401,649		Gunnery calc
1826	1931	NCR	US	401,749		Adder
1827	1932	Sundstrand	US	401,904		Book keeper
1828	1933	Paul R H	GB	403,019		stylus games scorer
1829	1932	Platt J F	GB	403,991		Cash Register with simple optical projection
1830	1932	S-C Patent AG	CH	404,919		Multiplying machine
1831	1932	Ellis Adding type writer Co	US	404,927		Totaliser
1832	1932	Thomas & Mowbray	GB	405,666		Calculating-apparatus; statistical machines
1833	1932	Gardner Co	US	406,152		Listing machine
1834	1934	Pearson J L	GB	406,309		Apparatus for indicating the product or quotient of two factors has two cylindrical or right-conical sur- faces carrying logarithmic curves
1835	1932	Sonabend H	POL	406,488		Navigation device
1836	1932	GEC Co Ltd	GB	406,828		Calculating devices for thermionic valve circuits

#	Year	Patentee	Country	Pat Number	Copied	Descr
1837	1933	Bochelli G	IT	407,274		Educ device, abacus
1838	1933	Ellis Adding type writer Co	US	407,738		2 Totalizers
1839	1933	Petters G B	GB	408,633		Calculating machine
1840	1933	Burroughs	US	408,795		Cheque writer
1841	1933	Gerhold G	AT	409,100		Electro-mechanical setting mechanism for use with calculating machines and Cash registers
1842	1933	Underwood Elliott-Fisher	US	409,101		typewriting and calculating machine comprising a carriage and a plurality of totaliz- ers
1843	1932	Valtat R L A	FR	410,129		Binary calculator
1844	1933	Attenborough & Checkanoff	GB	410,865		Tab calc for bets
1845	1934	H. Boardman H	GB	411,090		PIC Patent, differential scales.
1846	1933	Underwood Elliott-Fisher	US	411,291		
1847	1933	Brachvogel O	DE	412,312		In combined slide-rule and steel tape measure: the band is bent upon itself and connected by two shiftable hinged clips
1848	1933	Boutet R E	FR	412,747		Electric Adder
1849	1934	Thornton A G	GB	413,112		Thornton magnifier fitted to a cursor.
1850	1933	Facit	SE	413,205		mm
1851	1934	Dargue . W., and Dargue F. L.,	GB	413,308		Longitudinal Slide Rule.(Dargue patent. Bowed spring on end of stock for constant tension.
1852	1934	BTM	GB	413,320		punch card
1853	1934	Petters G B	GB	413,373		Calculating Machine
1854	1934	Martin-Gwilliam V C E	GB	413,451		Celercertus rotary slide rule.
1855	1934	Prestman PC	GB	414,140		Games scorer
1856	1934	Mercedes	DE	414,248		Typewriting- calculating machine
1857	1934	Gardner Co	US	414,507		A multiple-bank key-board, independently operated, listing and adding machine
1858	1934	Vickers	GB	414,742		Anti aircraft
1859	1934	Carfax Cards Ltd	GB	414,810		Game scorer discs
1860	1934	Grimston F J	GB	414,876		Appliance for position of decimal point
1861	1933	Mercedes	DE	414,931		Printing adding machine is combined with a complete typewriting machine
1862	1934	Schumacher E	DE	414,995		Apparatus for evaluating the function y= nx(1-x) has a 1: 2 ratio spur-and-pinion gear arrangement 46, 47 with attached radial arm
1863	1933	Castells P	ESP	416,151		Apparatus for the mechanical solution of systems of linear equations has sets of mechanisms

#	Year	Patentee	Country	Pat Number	Copied	Descr
1864	1933	Printo A G	CH	416,218		Tab calc interest wages
1865	1933	NCR	US	416,498		Totalizers
1866	1933	NCR	US	416,870		Motorised calc machine
1867	1933	Burroughs	GB	416,985		Utility bills
1868	1933	AEC Ltd	GB	417,063		Adder using elec relays
1869	1933	NCR	US	417,526		Adder
1870	1933	Adrema	DE	417632		Apparatus for compiling statistics
1871	1934	Wellington B R	US	417841		Solving arithmetical, algebraic, and trigonometrical problems has a frame of triangular form with attachable scale.
1872	1932	Burroughs	US	417991		Adder
1873	1934	Hilscher & Heinitz	DE	418536		Totalizer
1874	1934	Goerz Optische	CZ	419201		Device for mechanically evaluating a three dimensional function of the form z=f (x, y)
1875	1934	Ashmore J W	GB	419,476		Tabular device for bets
1876	1933	Siemens Bros & Co Ltd	GB	419,600		Electrically operated apparatus for registering and totalling a series of Cash or other values transmitted thereto in the form of electric signals,
1877	1934	Mercedes	DE	420,721		Calc typewriter
1878	1934	NCR	US	420,807		Several Totalizers
1879	1934	Paul R H	GB	422,230		Bridge scorer discs
1880	1934	Burroughs	US	423,169		Totalizer
1881	1934	Siemens A G	DE	423,265		Punch
1882	1934	Electroacustic Ges.	DE	423,922		Acoustic determination of the direction of aircraft
1883	1934	NCR	US	424,420		Totalizers
1884	1934	Richardson S & HW	GB	424,489		Games scorer discs
1885	1934	Faber	DE	424,863		Cursor for a slide-rule
1886	1934	Anker Werke	DE	425,130		2 Totalizers
1887	1934	Burroughs	US	427,606		Totalizer
1888	1934	NCR	US	427,722		totalizesr
1889	1934	NCR	US	427,792		Totalizer
1890	1934	Underwood Elliott-Fisher	US	428,239		Calc typewriter
1891	1934	Gustafsson & Hellgren	SE	429,110		Display for Adder
1892	1934	Hasel-Bauer L	FR	429,588		Calc typewriter
1893	1934	Colvin C H	US	429,717		Speedometers; plane-trigo- nometry calculators
1894	1934	BTM	GB	429,950		Calculating-machine is combined with a photographic recording device
1895	1934	Levkovitsch & Goudime	GB	430,449		Mechanical solution of vector problems has four spaced arms or equivalents connected in pairs
1896	1934	British Cash Register Co Ltd	GB	430,677		cash register
1897	1934	Gustafsson	SE	430,745		ASMD ten key

#	Year	Patentee	Country	Pat Number	Copied	Descr
1898	1934	Nederlandsche Instrumenten	NL	431,314		for anti- aircraft guns for the range of a target
1899	1934	Burroughs	US	431,354		Adder printer
1900	1934	Facit	SE	431,623		ASMD
1901	1934	Facit	SE	431,627		ASMD
1902	1934	Felt & Tarrant	US	431,961		ASMD
1903	1934	HUG Gebr	CH	433,976		Aircraft distance calc
1904	1934	Republic Flow Meters Inc	US	434,052		Multiplying or dividing apparatus has a pair of arms each moved in accordance with one factor, the arms being parallel when in their initial positions
1905	1934	Mercedes	DE	434,369		Calc typewriter
1906	1934	IBM	US	435,139		Combined adding and sorting machines
1907	1934	Felt & Tarrant	US	435,286		Machine with a laterally movable totalizing counter
1908	1935	NCR	US	436,540		accounting machine
1909	1935	Platt J F	GB	436,795		Cash register with elec display
1910	1935	Seehase H	DE	437,433		Stylus operated Adder
1911	1935	BTM	GB	437,578		Mechanism for dividing a number set up in a register by two
1912	1934	Hamann C	DE	437,743		ASMD
1913	1935	Gaudin & Dawson	GB	438,348		Device for the ratio of two variable factors has an electrical circuit
1914	1935	Mercedes	DE	438,369		calc type writer
1915	1935	Mercedes	DE	438,516		Mult by repeated addition
1916	1936	NCR	US	439,118		printing cash register
1917	1936	Rudd G W	ZA	439,419		Bridge scorer on endless bands
1918	1935	IBM	US	439,512		Electromatic typewriter
1919	1965	NCR	US	439,635		Totalizer
1920	1936	Burroughs	US	439,838		Print Adder
1921	1934	Burroughs	US	440,108		Ten key Adder
1922	1936	McClure E C	AU	440,180		Machine for multiplying, without decimalization, a non-decimal amount by a decimal amount
1923	1934	NCR	US	440,352		2 colour ink ribbon
1924	1935	Nederlandsche Instrumenten	NL	440,715		Aircraft targetting
1925	1935	Hilson O V	GB	440,857		Games scorer
1926	1935	Europea RegistrationS A	IT	441,471		Cash register
1927	1933	Ericsson	SE	442,132		Totalizer
1928	1934	Burroughs	US	442,142		Portable Adder
1929	1934	Uher E	DE	442,338		Average speed indicator
1930	1933	NCR	US	442,443		Totaliser
1931	1934	Sanders S A	FR	442,538		Many Totalizers
1932	1936	Stylocalc SA	FR	442,648		Adder in a fountain pen
1933	1936	Burroughs	US	442,856		Printer Adder
1934	1936	Zuidema E	NL	442,998		Games scorer

#	Year	Patentee	Country	Pat Number	Copied	Descr
1935	1936	C.J. Dussel & W. Pasveer	NL	443,689		ALRO (Holland) circular slide rule
1936	1933	Krupp A G	DE	443,786		Accounting machine
1937	1933	Winklhofer & Jaenicke A G	DE	444,033		Electrical selector mechanism for nine Totalizers
1938	1936	Seyler C	GB	444,422		Circular Slide rule for properties of Coal
1939	1936	Krupp A G	DE	444,588		Cash register
1940	1936	Means &Means	US	445,236		Tab calc calendar
1941	1936	NCR	US	445,281		Powered calc
1942	1936	Underwood Elliott Fisher	US	445,504		Comp type wtiter
1943	1936	Burroughs	US	445,572		Totalizers
1944	1936	Burroughs	US	445,877		Totalizers
1945	1936	BTM/IBM	GB	446,179		Tab machine
1946	1936	Broido & Hausmann	GB	446,338		Multiplication by light rays
1947	1936	Dubilier W	US	447,001		Mech Slide rule strips on endless band
1948	1934	Burroughs	US	447,485		Print Adder
1949	1934	Otani T	JAP	447,912		Totalizer
1950	1934	Boutet E R	FR	448,787		Electric multipling machine
1951	1936	NCR	US	448,791		Acctg mach to print dates
1952	1934	Boutet LE R	FR	448,925		Electric calc machine in £sd
1953	1936	Goerz optische	CZ	449,154		Calc aeroplane height
1954	1936	Clarke J	CAN	449,505		Slide rule device measure logs of timber
1955	1934	Guy F E	GB	450,015		Electrical calculating-machine has a Totalizer operated by electromagnetically
1956	1935	Amy & Sowerbutts	GB	450,154		Adding and subtracting apparatus tabular appliances
1957	1934	Burroughs	US	450,533		Clutches
1958	1934	Burroughs	US	450,591		Totalizer
1959	1934	Marchant	US	450,599		ASMD
1960	1934	Underwood-Elliott Fisher	US	451,011		Calc typewriter
1961	1936	Mercedes	DE	451,121		Cash register
1962	1935	Burroughs	US	451,244		Ten key, Totalizers
1963	1934	Priest H C	AUS	451,504		Bridge scorer, discs
1964	1936	Rolcik	CZ	451,736		SR combined with sight for fire arms
1965	1935	Clementis A A	GB	452,655		Appliance for solving equationsh as a base with functional scales on its sides, a chart with a fixed diagonal ..
1966	1935	NCR	US	452,787		Adder printer
1967	1935	Sanders SA	FR	453,280		Adder with coumter
1968	1935	Europa Schreibmaschinen A G	DE	453,474		Calc typewriter
1969	1935	Burroughs	US	453,495		Many Totalizers
1970	1935	NCR	US	453,505		Totalizer control mechanism

#	Year	Patentee	Country	Pat Number	Copied	Descr
1971	1935	Hunter & Campos	GB	453,823		Accounts machine
1972	1935	BTM	GB	454,247		£sd converter
1973	1935	BTM	GB	454,248		Divide by 12 eg inches to feet
1974	1935	BTM	GB	454,249		Divide mechanism
1975	1935	EkonomiRegister AB	SE	454,456		Machine for keeping accounts
1976	1935	Underwood=Elliott Fisher	US	454,463		tTotalizers on type writer
1977	1935	Keeble & Dee	AUS	454,654		Great circle graphic calculator for use in solving problems in navigation and astronomy
1978	1935	Astrawerke AG	DE	454,938		ASMD
1979	1935	Mander J W/ ABC Novelties & Inventions	GB	455,053		Multi slide rule
1980	1935	NCR	US	455,290		Add to each Totalizer
1981	1935	Western Electric	US	455,331		Recording calc machine results on punched card
1982	1935	Sperrry Gyroscope	US	455,431		Gun fire -control systems.
1983	1935	BTM/IBM	GB	456,367		Multiplying machine
1984	1936	Faber-Castell	DE	457,085		Cursor for use with slide-rules having graduations on the upper and lower side edges as well as on the face
1985	1935	BTM/IBM	GB	457,136		Multiplying
1986	1935	Burroughs	US	457,273		Machine for banks
1987	1935	Zeiss C	DE	460,563		Multiplication gear in which a cam a displaces a contact lever radially
1988	1935	Worman M	GB	460,652		Multiply monetary units electromechanical
1989	1937	Baer G	CH	460,856		Multiply using drums
1990	1935	NCR	US	461,347		Carriage tabulation and control
1991	1935	NCR	US	461,423		Carriage tabulation and control
1992	1929	Fahrkarten drucker ges	DE	461,949		Cash register is provided with means for determining and printing the product of price and quantity.
1993	1935	Ericsson	SE	462,320		Adder
1994	1935	Wanderer werke	DE	462,331		accounting machine
1995	1937	Forges et Acieries de la Marine	FR	462,830		Electric calculating apparatus for firing problems
1996	1937	Electrical Research Products Inc	US	463,027		Totalizer
1997	1936	Wanderer Werke	DE	463,512		Totalizer
1998	1935	NCR	US	463,637		Carriage position
1999	1935	Simon F	TN	464,234		Circular slide rule.
2000	1937	NCR	US	464,339		Front feed device for calculating machines &c
2001	1934	Nyberg E V	SE	464,422		ASMD ten key

#	Year	Patentee	Country	Pat Number	Copied	Descr
2002	1935	Nyberg E V	SE	464,462		ASMD ten key
2003	1936	Ekonomiregister AB	SE	464,508		Many Totalizers
2004	1936	Ekonomiregister AB	SE	464,509		Many Totalizers
2005	1935	Officine Galilei S A	IT	464,676		Tens complement Adder
2006	1935	Gardner Co	US	464,746		Totalizers
2007	1935	Weekes W G	GB	465,172		Ten key calc
2008	1935	Kooperativa Forbundet	SE	465,402		Cash register
2009	1935	McClure E C	AUS	465,517		Multiple £sd partial products on plates
2010	1935	Aarni & Kemila	FI	465,849		A nought-entering mechanism for "ten key" adding machines
2011	1937	McGeorge EG	NZ	466,017		Calculating device(circular)
2012	1937	Hill H W	GB	466,909		Indicating the course and speed of an observed aircraft
2013	1935	Durand MP	FR	466,933		Multiplying machine having means for setting both factors and employing members shaped to represent the partial products : the members are displaced in two directions at right-angles
2014	1937	Burroughs	US	468,054		Front feed machine
2015	1937	Thornton Ltd	GB	468,257		PIC Patent. Arrangement of Sin, Cos & Tan scales & inverse trig scales for electrical engineers.
2016	1937	Faber-Castell	DE	468,323		Cross section of SR
2017	1936	Underwood Elliott Fisher	US	468,660		carriage control
2018	1936	Mercedes	DE	468,668		totaliser type writer
2019	1937	Physica A/B	FI	468,996		A correction calculating ruler for the calculation of flying path deviations (Slide Rule for Gun control Has cursor on cursor
2020	1936	Thomas A	GB	469,028		Multiply by repeat add. PunchMultiplying-apparatus to deal with multiplicands in decimal, sterling or other notation,
2021	1936	Astrawerke AG	DE	469,034		Ten key add with carrtiage, decimal & £sd
2022	1936	Miller & Beverley	GB	469,510		Games scorer
2023	1936	Gluth J D	GB	469,838		Height computing slide rule
2024	1936	Remington Rand	US	471,053		Utility pricing from punch card
2025	1937	Inst. De Precision	FR	471,169		Record card controlled calculating machines
2026	1936	Gardber Co	US	471,364		Totalizers
2027	1937	Fullford A A	NZ	471,780		Tabular calculator with bands
2028	1937	Monroe	US	472,456		Calculating-machine of the key-set independently-operated type, the differential mechanism has planetary gearing

#	Year	Patentee	Country	Pat Number	Copied	Descr
2029	1937	Mercedes	DE	472,776		Rcording results of calculating , e.g.carrying forward of balances using punched strip or card
2030	1937	Underwood Elliott Fisher	US	472,777		Ten key add
2031	1936	Dodds F T	GB	472,821		Game scorer
2032	1937	Bilde T E D	SE	473,265		Ten key machine
2033	1937	Officine di Villar Perosa SA	IT	473,309		Cash register
2034	1937	Bilde T E D	SE	473,352		Calculating machines (Ten key
2035	1936	Sanders S A	FR	473,624		Totalizers
2036	1935	Nykaenen T	FI	473,659		Artillery
2037	1936	Bateman J W	GB	474,269		Triangles
2038	1937	Kubler C	DE	474,334		Combined slide rule & Adder
2039	1937	Sinitzin-White, Solovioff, & Glover	US	474,335		Navigation
2040	1936	Original-Odhner AB	SE	474,405		Adder for £sd
2041	1936	Wanderer-werke	DE	474,543		Totalizer
2042	1936	Wanderer-werke	DE	474,938		Totalizer
2043	1936	Thorne H	GB	475,580		Scorer on tapes
2044	1937	Simmonds Dev Corp Ltd	GB	475,720		Calculating apparatus (Circular altitude calculator)
2045	1937	Cordt Univ Rechenmaschine gmbh	DE	475,765		Paper carriage
2046	1943	Elec. Improv.Ltd;	GB	476,164		Electrical calculating machines (Analogue electrical)
2047	1937	Elec. Improv.Ltd;	GB	476,165		Electrical calculating machines (See 389,524)
2048	1937	Granat E	FR	476,831		Electric calculating apparatus, embodying potentiometric elements (for analogue ballistic calculations)
2049	1935	Thiboust L	FR	476,834		Measure ratios or quotients, speed indicator
2050	1936	Eureca Ltd	CH	477,035		Cash register for £sd
2051	1938	Siemens	DE	477,101		Logarithmic calculator, drums bands & switches Electrical for tote betting
2052	1936	Monroe	US	477,797		Adder
2053	1937	Hughes Henry & Son Ltd	GB	478,053		Navigation device plotter
2054	1938	Burroughs	US	478,432		Totalizers
2055	1936	Sperry Gyroscope	US	479,018		Range finder
2056	1938	Burroughs	US	479,061		Paper guide for calculatingmachines &c.
2057	1936	Original-Odhner AB	SE	479,234		Adder
2058	1938	Hughes AJ, Hughes Hentry & Son Ltd	GB	480,112		Calculating mechanism for measuring instruments (mechanical counting
2059	1938	Dabbs F T	GB	480,163		Cash register
2060	1938	Dabbs F T	GB	480,242		Cash register
2061	1937	Veal,Veal,Metcalfe & Farrow	GB	480,244		Game scorer circ discs
2062	1937	Ekonomi Register A B	SE	480,322		Totalizers

#	Year	Patentee	Country	Pat Number	Copied	Descr
2063	1937	Coppock T L	AR	481,675		Copy-holder for use with typewriters, and calculating machines
2064	1935	NCR	US	481,730		A multiplying-machinehas several multiplicand storers in each of which a different multiple of a multiplicand is stored, th
2065	1938	Broido D	GB	481,798		A calculating device combined with a weight indicator (mechanical
2066	1935	Underwood Elliott Fisher	US	481,801		Adding machines having multiple-zero keys
2067	1935	Carter C E	GB	481,965		Totalizer
2068	1936	Ekonomiregister AB	SE	482,186		Adder
2069	1937	Hale S	GB	482,264		A device for use in solving triangles particularly for ascertaining the length of the hypotenuse of a right-angled triangle
2070	1936	Lewis H G	AUS	482,486		tab calc drums prices
2071	1939	BTM	GB	483,021		Counters for tabulating and other calculating machines
2072	1936	Burroughs	US	483,086		2 Totalizers
2073	1936	NCR	US	483,093		Ellis type calc
2074	1936	Burroughs	US	483,113		Totalizers
2075	1941	Powers	US	483,234		calculating machines (Tab card)
2076	1938	Powers Accounting machines Ltd	GB	483,235		Calculating machines (Tab card
2077	1938	Inst.de Precision	FR	483,906		Calculating machines
2078	1936	Burroughs	US	484,095		2 Totalizers
2079	1935	Borel C	CH	484,150		A mltiplying-machine has multiplicand and multiplier registers
2080	1936	Gardner Co	US	484,821		List Adder
2081	1938	Edridge WH	GB	484,852		combined logarithmic calculating and linear measurement scales or scales having equi-distant graduations(Like a tape-measure
2082	1938	BTM	GB	485,103		Counters for tabulating and other calculating machines
2083	1937	Gardner Co	US	486,841		Adder
2084	1936	BTM	GB	487,341		multiplier
2085	1938	Zeiss, Carl	DE	487,479		gearings for calculating apparatus
2086	1936	Underwood Elliott Fisher	US	487,494		2Totalizers
2087	1936	Zeiss	DE	487,763		Range finder
2088	1938	Kubler	DE	488,083		Linear stylus Adder
2089	1936	Hunter & Campos	GB	488,100		account storing
2090	1938	Rochat, Andre	CH	488,290		Calculating apparatus(Circular slide rule, spirals

#	Year	Patentee	Country	Pat Number	Copied	Descr
2091	1937	Underwood Elliott Fisher	US	488,660		Totalizers
2092	1938	Arnold C	DE	488,754		Mechanical toy imitating a calculating animal
2093	1938	BroidoD	GB	489,425		Statistical and other calculating machines, Analysing record cards
2094	1938	Fountaine C A	GB	489,501		slide rules with slides with stops
2095	1938	Fountaine C A	GB	489,603		Slide rule cursor
2096	1938	Hofgaard R	NOR	490,000		Key-boards of calculating machines
2097	1938	Hughes,Henry & Son	GB	490,579		Computing devices for aircraft take off
2098	1937	Underwood Elliott Fisher	US	490,700		Ten key calc type writer
2099	1938	Western Electric	US	490,869		Calculating machines
2100	1936	Chick T W	GB	491,066		M D non decimal
2101	1938	Wheatley S	GB	491,381		Control device for the printing mechanism of calculating - machines
2102	1937	Underwood Elliott Fisher	US	491,465		Computing typewriter for £sd
2103	1938	Velle E H	NOR	492,145		Logarithmic calculating disc with toothed gear
2104	1938	Hofgaard R	NOR	492,748		Calculating machine electro-magnetic
2105	1938	Jones H	GB	493,114		Logarithmic calculator
2106	1938	Broido D	GB	493,277		Calculating machines : Relays, screens, radiation)
2107	1938	Audibert R	FR	493,753		Totaliser actuating and printing means for calculating machines and similar apparatus
2108	1938	Remington Rand	US	493,842		Calculating machine
2109	1938	STC	GB	494,252		Calculating devices for navigating purposes
2110	1938	Remington Rand	US	494,522		Record card controlled calculating machines
2111	1938	BTM	GB	494,583		Paper-feeding mechanism for calculating, accounting machines &c.
2112	1937	Underwood Elliott Fisher	US	494,794		Computing typewriter for £sd
2113	1938	Neitzel C	CH	494,806		Adjustable indicating device for use with recording calculating machines
2114	1937	HausheerM	FR	495,396		Accounting type writer
2115	1938	British Thomson Houston	GB	495,416		Apparatus for use in navigation
2116	1938	Goddard J T	GB	495,448		Games-score registering apparatus
2117	1938	Allderdice	US	495,998		Tabular calculator, fabric length pricing
2118	1937	Day H A	GB	496,365		Game scorer circ discs
2119	1937	Mercedes	DE	496,720		Totalizer
2120	1937	Remington Rand	US	497,036		Accumulator

#	Year	Patentee	Country	Pat Number	Copied	Descr
2121	1938	BTM	GB	497,039		Calculating machines for performing division
2122	1938	Indicators Ltd	NZ	497,130		Log scale device for the odds on the TOTE
2123	1938	Veenman D	NL	497,196		Motor-driven calculating or accounting machine
2124	1937	Monroe	US	497,441		Totalizer
2125	1937	Monroe	US	497,462		Totalizer
2126	1938	Baldwin RE	GB	497,588		Calculating machines(for Bank statements)
2127	1937	NCR	US	497,640		Totalizer
2128	1937	Lehner & Co	DE	497,641		Multiply cost of a phone call
2129	1937	Astrawerke AG	DE	497,833		ASMD on typewriter
2130	1937	Underwood Elliott Fisher	US	497,940		Tab mechamism
2131	1936	Goerz Optische	AT	498,212		Firing at moving targets
2132	1939	IBM	US	498,429		record or check sorting machines with card punching
2133	1937	Bisset K	GB	498,698		Multiple-dial scoring device has a set of fingering discs
2134	1937	Vickers	GB	498,744		anti aircraft aimer
2135	1937	Vickers	GB	498,745		anti aircraft aimer
2136	1937	Ward |F C	CH	498,938		Tab calc mult tables
2137	1937	Pracisions Mechanische & Optische	HUN	498,999		Analog multiplier
2138	1937	Underwood Elliott Fisher	US	499,027		Totalizers
2139	1937	Underwood Elliott Fisher	US	499,826		Totalizers
2140	1938	Lucas SRL / Unique	GB	500,237		Slide Rule Calculators (Unique Commercial slide rules.
2141	1938	Boyd P	GB	500,267		Course calculating instruments for aeroplanes, airships and the like
2142	1937	Juhasz I	HUN	500,392		Anti aircraft
2143	1938	Burroughs Corp	US	500,580		Calculating machine
2144	1938	Faber-Castell	DE	500,920		Slide rule cursor
2145	1937	NCR	US	501,404		Auxiliary keyboard
2146	1937	NCR	US	501,405		Print ribbon
2147	1940	Remington Rand	US	501,566		Accounting machine
2148	1938	Pringle W C	GB	501,851		Tabular calculator for Hire Purchase
2149	1938	BTM	GB	501,982		Sheet-feeding mechanism for calculating, accounting and like machines
2150	1936	Askania werke	DE	502,820		Product of two or more factors is computed buy a transmission system having two substantially parallel members which are pivoted about spaced axes

#	Year	Patentee	Country	Pat Number	Copied	Descr
2151	1937	Chick T W	GB	502,958		Multiplying and dividing machine division is effected by setting up a standard series of multiples of the divisor, comparing these with the upper part of the dividend
2152	1939	Couffignal PL & Desmoulins	FR	502,963		Measuring apparatus combined with calculating mechanism (Weighing scale
2153	1937	NCR	US	503,015		splitting machine
2154	1938	Chick T W	GB	503,190		gearing
2155	1939	Holloway A J	GB	504,116		Registering or calculating apparatus (Dartts & Billiards scoring
2156	1938	Derrington LJ	GB	504,276		Games scorer discs
2157	1938	Fishburn J E	GB	504,457		Adder non decimal
2158	1938	Court H W	GB	504,488		Scorer discs
2159	1938	Pracisions Mechanische & Optische	HUN	504,512		Anti aircraft aimer
2160	1937	Davies A E	GB	504,599		Electric printing calculator for dividends
2161	1938	Bisset K	GB	504,710		Scorer with dials
2162	1937	Hallgren G H	SE	504,884		Adder
2163	1939	Maxson Corp	US	505,114		Multipying device for petrol pumps
2164	1936	Burroughs	US	506,013		Adder on Moon-Hopkins type
2165	1939	Crooks E	GB	506,039		Calculating device for use with machine tools
2166	1937	NCR	US	506,500		Account balancing
2167	1939	TKS	CZ	506,947		Calculating apparatus for use with listening apparatus early Radar?
2168	1939	BTM	GB	507,178		counters for tabulating and other calculating machines
2169	1939	Broido D	GB	507,560		Accounting and like calculating machines
2170	1938	Defiance Mfg Corp	US	507,723		Totalizers
2171	1938	Osterberg E J	SE	507,817		Device for the areas of surfaces or volumes from a structural drawing or plan
2172	1938	Mercedes	DE	508,141		Totalizers
2173	1939	Renouf, Harrison,Cassidy, & Hale	GB	508,518		Scorer discs
2174	1939	Knotz A	DE	508,758		Indicating device for Cash registers and calculating machines, for £sd
2175	1918	Wanderer werke	DE	508,918		Accounting machine
2176	1939	Costes D	FR	508,923		aerial navigation for bearing, speed during flight, position, time of flight…
2177	1939	Mountbatten. Lord L	GB	508,956		Naval calculating apparatus
2178	1937	NCR	US	509,042		Totalizers

#	Year	Patentee	Country	Pat Number	Copied	Descr
2179	1939	Maxson W L Corp	US	509,045		Calculating apparatus
2180	1939	Adyama & Sazaki	JAP	509,185		Astronomical navigation calculator
2181	1938	Mercedes	DE	509,206		Totalizer
2182	1938	Kooperativa Forbundet	SE	509,441		Totalizer
2183	1938	Mercedes	DE	509,444		Totalizer
2184	1939	Monroe	US	509,747		Machine for the repeated registration of a multiplicand includes differential multiplier entering members and multiplier storage wheels
2185	1938	Costes D	FR	509,993		Aerial navigation
2186	1939	Fountaine C A	GB	510,108		Slide rule cursor
2187	1939	Saucant E J H	DK	510,220		Combined protractor and calculating device for use in navigational problems
2188	1938	Demeulenaere M	BEL	510,414		Cash register for £sd
2189	1938	Duncan & Greenway	GB	510,444		Games scorer dials
2190	1939	British Thomson Houston Co Ltd	GB	511,175		Automatic calculating apparatus(Valvse, artillery Electrical eqn solver
2191	1937	Thorne H	GB	511,184		Games scorer slides
2192	1939	Schmitt H	DE	511,898		Sound deadening
2193	1937	WandererWerke	DE	512,054		Totalizers
2194	1939	Sperry Gyroscope Co Inc	US	512,055		Gun-fire control apparatus
2195	1939	Sperry Gyroscope Co Inc	US	512,128		Solving, calculating or computing mechanism particularly for use in gun-fire control apparatus
2196	1939	English Electric Co Ltd	GB	512,464		Electrical calculating and indicating apparatus
2197	1940	Barker W J	GB	512,729		Tabular calculator for cost of mixes
2198	1940	STC	GB	513,248		Equipment for telephone call billing records
2199	1940	BTM	GB	514,181		Calculating machinesfor rounding up to next higher value
2200	1939	Webb C F	GB	514,289		machine of the. key-controlled multiple-bank type
2201	1939	Webb C F	GB	514,290		Calculating machine of the key-controlled multiple-bank type
2202	1940	Baldwin R E	GB	514,780		calculating machine is provided with many totalizers
2203	1940	NCR Co	US	514,919		Cash registers &c.Key board bank
2204	1937	NCR	US	514,973		Accounting machine
2205	1938	Lagerman T	SE	515,270		Totalizer
2206	1940	IBM	US	516,225		Accumulator or counter
2207	1938	Mercedes	DE	516,693		cac type writer
2208	1938	Underwood Elliott Fisher	US	516,792		Accounting machine

#	Year	Patentee	Country	Pat Number	Copied	Descr
2209	1940	Burroughs	US	516,795		printing calculating or the like machines
2210	1938	Chick T W	GB	517,008		Machine todivide
2211	1940	NCR CO	US	517,389		Tally strip mechanism for accounting or like calculating machines
2212	1940	Jacobsson & Dilot	SE	518,033		Supports for calculating machines&c.
2213	1940	NCR	US	518,671		Accounting machines and similar calculating machines
2214	1940	Rowley GA	GB	518,830		Calculating instrument (for timing racing pigeons)
2215	1938	Mercedes	DE	518,837		Totalizer
2216	1937	Monroe	US	518,840		Multiply mechanism
2217	1940	IBM	US	518,864		Adding mechanism
2218	1938	Kiel K B	DE	518,924		Multiply mechanism
2219	1938	BTM	GB	519,843		Counter
2220	1938	BTM	GB	519,898		Counter
2221	1940	Fahrkarten Gesellschaft	DE	519,934		Multiplying machine
2222	1938	Underwood Elliott Fisher	US	520,110		Accounting machine
2223	1938	Fahrkarten Gesellschaft	DE	520,226		Multiply
2224	1938	Contraves A G	CH	520,228		Evaluating a function comprising multiplicative combinations and at least one addition of a number of independent variables
2225	1938	Lorens L M	US	520,291		ten key add lister ribbon
2226	1938	Mercedes	DE	521,229		Totalizers
2227	1938	Mercedes	DE	521,300		Calc type writer
2228	1938	Broido D	GB	521,471		Photo-electric determination of values from graphs.
2229	1940	Broido D	GB	521,871		solve equations photo electric cells
2230	1940	Baldwin R E	GB	522,314		Record card controlled calculating machines
2231	1938	Remington Rand	US	522,562		Record-controlled statistical machines.
2232	1938	Elwell E M	GB	522,630		Scorer discs
2233	1940	Webb C F	GB	522,721		Calculating machines key drivers
2234	1937	Wanderer Werke	DE	522,922		Totalizers
2235	1938	Burroughs	US	523,064		Totalizers
2236	1940	Rademaker W E	FR	523,324		Tabular Calculator
2237	1940	Vickers	GB	523,382		Calculating devices
2238	1940	English Electric Co Ltd	GB	523,442		Mechanical calculator (slide rule for power factor
2239	1939	Mercedes	DE	523,505		Totalizers
2240	1938	Kooperativa Forbundet	SE	523,687		Totalizers
2241	1940	Wanderer Werke	DE	524,023		paper-feed mechanism for typewriters etc.

#	Year	Patentee	Country	Pat Number	Copied	Descr
2242	1939	Patmore F J	GB	524,271		Machine for multiplication in non-uniform notations has a series of setting elements, one for each denomination
2243	1939	NCR	US	524,630		Cash register
2244	1939	Mercedes	DE	524,895		totalizers
2245	1940	NCR	US	525,178		Cash registers accounting machines or similar calculating machines
2246	1939	Broido D	GB	525,268		Photoelectric calc
2247	1940	STC	GB	525,329		Calculating installation and apparatus for service available to a number of users has at least one centralized calculating equipment …
2248	1940	STC	GB	525,330		Electrically operated calculating apparatus
2249	1940	STC	GB	525,396		Electrically-operated calculator equipment
2250	1940	STC	GB	525,397		Electrically-operated calculator equipment
2251	1940	STC	GB	525,398		Electrically-operated calculator equipment
2252	1940	Rubber Res Assoc	GB	525,717		Slide rule for testing rubber
2253	1939	Mercedes	DE	525,861		calc typewriter
2254	1938	Addressograph Multigraph	US	525,955		Record card controlled computing machine
2255	1939	Olivetti spa	IT	526,068		Ten key machine
2256	1939	Italiano Commerciale Macchine per Ufficio	IT	526,703		Totalizer
2257	1940	Thomas & Mowbray	GB	526,762		Print Adder
2258	1940	Kirk J R	GB	527,554		scorer discs
2259	1939	Dunlop J	GB	527,962		ASMD decimal
2260	1940	Soc. Inf Insts.dePrecision	FR	528,059		Electrical apparatus for calculations has a series of groups of circuits
2261	1939	Zolnay E	HUN	528,083		Adder
2262	1939	Underwood Eliott Fisher	US	528,084		Accounting machine
2263	1940	Johnson W E	GB	528,106		Printing mechanism for non- decimal machines
2264	1938	AB Result	SE	528,517		Totalizer
2265	1940	STC	GB	528,794		Direction finder
2266	1939	Robitschek J	CZ	529,095		Double spiral slide rule
2267	1940	Waddington, John & Co	GB	529,555		tabular calculator with an annular disc with radiating columns of figures ..
2268	1940	Eastman Kodak	US	529,562		Photographic data recording
2269	1939	NCR	US	530,120		adding typewriter
2270	1939	Marchant	US	530,383		Adder
2271	1940	Daemen W	CH	530,527		Circular sr Multi scale
2272	1939	Daemen W	CH	530,527		Circular slide rule

#	Year	Patentee	Country	Pat Number	Copied	Descr
2273	1939	Guys Calculating Machines Ltd	GB	530,600		Pin wheel machine
2274	1941	IBM for BTM	US	532,109		Dviding with punch cards
2275	1939	Lutz J	DE	532,234		Gunnery calc
2276	1939	NCR	DE	532,666		Accountingmachine
2277	1941	Holmes H H	GB	532841		Cylinder tab calc
2278	1939	BTM	GB	533,586		Totalizer
2279	1939	Remington Rand	US	534,022		Book keeping machine
2280	1939	Underwood Elliott Fisher	US	534,032		print mechanism
2281	1941	Brockhurst G N	JAP	534,118		letter code check calculator
2282	1939	Addressograph Multigraph	US	534,334		Multiply repeat add
2283	1939	STC	GB	534,855		slide rule for calculations involving vector quantities
2284	1941	Driescher H	DE	534,894		Geared tab calc for utility bills
2285	1939	British Thompson Houston	GB	535,043		Circular slide rule for lighting
2286	1941	Copeland Chatterson	GB	535,279		Wage calculator Tabulator
2287	1939	Young A	FR	535,414		Tab calc mult £sd
2288	1939	Cugley F J	GB	535,476		Circ slide rule for drinks trade
2289	1939	Broido D	GB	535,705		ASMD £sd
2290	1941	NCR	US	535,824		paper feeding means for accounting machines and similar calculating machines
2291	1941	NCR	US	535,891		Electric calculating machine
2292	1939	Mercedes	DE	536,405		Totalizer
2293	1941	IBM	US	536,644		accumulators for calculating machines
2294	1938	Monroe	US	536,898		print Adder
2295	1941	BTM	GB	537,858		Non-decimal calculating machine
2296	1941	Audibert R	FR	538,419		Totaliser actuating and printing
2297	1941	Sangamo WestonLtd	GB	538,696		Device for use in photographic printing operations
2298	1940	Underwod Elliott Fisher	US	539,306		Accounting machine
2299	1941	IBM	US	539,322		Electrical calculating device
2300	1940	Underwod Elliott Fisher	US	539,372		Accounting machine
2301	1939	Burroughs	US	539,453		Print utility bill
2302	1939	Olivetti spa	IT	539,654		Adder
2303	1941	STC	GB	539,745		Electric calculator equipment
2304	1939	Brit Adding & Calc Machines Ltd	GB	540,283		Adder
2305	1939	Brit Adding & Calc Machines Ltd	GB	540,311		Adder
2306	1939	Brit Adding & Calc Machines Ltd	GB	540312		Adder
2307	1939	Brit Adding & Calc Machines Ltd	GB	540,313		Adder
2308	1939	Brit Adding & Calc Machines Ltd	GB	540,314		Adder
2309	1939	Brit Adding & Calc Machines	GB	540,315		Adder

#	Year	Patentee	Country	Pat Number	Copied	Descr
		Ltd				
2310	1939	Brit Adding & Calc Machines Ltd	GB	540,316		Adder
2311	1939	Brit Adding & Calc Machines Ltd	GB	540,317		Adder
2312	1939	Brit Adding & Calc Machines Ltd	GB	540,318		Adder
2313	1939	Brit Adding & Calc Machines Ltd	GB	540,319		Adder
2314	1939	Brit Adding & Calc Machines Ltd	GB	540,320		Adder
2315	1940	Marchant	US	540,604		Multiplying machine
2316	1940	Svenska Kassaregister A B	SE	541,447		Cash register
2317	1941	Facit	SE	541,714		Locking device
2318	1941	Contraves AG	CH	541,761		Electrical calculating apparatus
2319	1940	NCR	US	541,909		Elec. multiplier
2320	1939	Rook & Rook	GB	542,074		Scorer discs
2321	1940	Underwood Elliott Fisher	US	542,354		Totalizer
2322	1940	Broido D	GB	542,476		Non decimal Adder
2323	1940	Monroe	US	542,516		Multiply repeat add
2324	1942	BTM/IBM	US	542,927		Calculating and statistical machines use valves
2325	1942	Willen R A A	GB	542,940		Slide rule for gears
2326	1939	Mercedes	DE	543,307		Adder
2327	1939	Mercedes	DE	543,965		Adder
2328	1942	McKie N A M	GB	544,533		Device for the optimum wave-band in short wave wireless communication- discs
2329	1941	Nilsson RS	GB	544,766		Adder
2330	1940	Brit Adding & Calc Machines Ltd	GB	545,438		Totalizer
2331	1940	Brit Adding & Calc Machines Ltd	GB	545,439		Totalizer
2332	1941	Broido D	GB	545,617		Multiply repeat add
2333	1941	Gledhill A H	GB	546,183		Full stroke mechanism
2334	1942	Addressograph-Multigraph	US	546,272		Calculating, tabulating or statistical machines
2335	1942	Addressograph-Multigraph	US	546,274		Calculating, tabulating or statistical machines
2336	1942	Addressograph-Multigraph	US	546,295		Relating to calculating machines
2337	1942	Kooperativa Forbundet	SE	547,147		Cash register or calculating machine.
2338	1942	STC	GB	547,163		Electrical calculating apparatus.
2339	1942	STC	GB	547,164		Calculating equipment
2340	1941	Sumner PJ H	GB	548,567		aircraft range circ slide rule
2341	1942	Broido D	GB	548,685		Computing device controlled by radiant energy has a screen, table or drum sub-divided into areas, each area representing by its transparency or reflective power a precomputed result

#	Year	Patentee	Country	Pat Number	Copied	Descr
2342	1942	Richards E C	GB	548,944		Tabular calculator, pocket
2343	1942	Vickers	GB	549,029		Circ sr for hardness
2344	1942	Morris John & Sons Ltd	GB	549,529		Calculator re water streams used for fire fighting or other purposes
2345	1943	Bell Telephone Co	US	549,533		Electric calculating apparatus
2346	1941	Brit Adding & Calc Machines Ltd	GB	549,960		Adder
2347	1941	Underwood Eliott Fisher	US	550,015		Typewriting accounting-machines
2348	1943	KFF	SE	550,097		Cash registers and like calculating machines
2349	1941	Richards |E C	GB	550,298		Finger turned Adder
2350	1941	Nilsson R S	GB	550,496		ASMD
2351	1942	Goldman & Gatty	GB	550,947		Anti aircraft aimer
2352	1943	NCR	US	550,978		Calculating or similar accounting machines
2353	1941	Facit	SE	551,311		pin wheel
2354	1942	Sumner P J H	GB	551,840		Circ slide rule for aircraft performance
2355	1941	Felt & Tarrant	US	551,994		Adder
2356	1941	NCR	US	553,057		Totalizers printing
2357	1943	Felt & Tarrant	US	553,198		Calculating machine includes a segment lever for imparting digital actuation to an actuator.
2358	1941	Ericsson	SE	553,947		Electrical multiplier
2359	1941	American Hydromath Co	US	554,435		Machine for ships metacentic height
2360	1941	Barr & Stroud Ltd	GB	554,559		anti- aircraft gunnery
2361	1939	Svoboda A	US	554,752		anti-aircraftt gunnery
2362	1942	Warne J	GB	555,275		Circ slide rule photo exposure
2363	1943	Burroughs	US	555,659		Printing calc
2364	1942	Stuckey D R	GB	555,921		Slide rule for animal feed
2365	1942	Lewis J H	GB	556,146		Aircraft flight time
2366	1943	Felt & Tarrant	US	556,239		Numeral drums on Comptometer
2367	1941	Abax Corp	US	556,265		Aircraft altitude
2368	1943	Victor Adding Machine Co	US	556,370		printing mechanism for calculating machines
2369	1942	Pimm G B R	GB	557,079		Slide rule for pile driving
2370	1943	Kodak Ltd	US	557,492		Photographic estimating and calculating device
2371	1941	Victor Adding machine Co	US	557,633		Multiplying machine
2372	1943	Bolton S E	GB	557,734		Poly slide rule for machining operations
2373	1943	Goudime-Levkovitsch P	GB	557,895		Circular slide rule for aircraft navigation
2374	1943	Remington Rand Inc	US	558,218		Totalizers for calculating machines
2375	1943	Aron Electricity Meter LTtd	GB	558,685		Course and speed calculating apparatus for use with aeroplanes
2376	1942	Maxson Corp	US	558,787		Range finder

#	Year	Patentee	Country	Pat Number	Copied	Descr
2377	1942	Hughes H & Son Ltd	GB	559,180		Solve triangles
2378	1942	Remington Rand	US	559,880		Printing tabulator
2379	1944	Remington Rand	US	560,021		Mech Creep accumulator
2380	1944	Wallace & Tiernan ltd	GB	560,183		Slide rule for chlorination
2381	1942	May W J	GB	560,706		aircraft navigation
2382	1944	Byerly R W	US	560,952		apparatus for graphical computation for the solution of navigation problems and similar problems
2383	1944	Lee W	GB	561,106		apparatus for calculating the height of aircraft spotted
2384	1942	Poole G	GB	561,358		Triangles for artisans
2385	1944	Cox & Stevens Aicraft Corp	US	561,365		Calculating device for use in aerial navigation
2386	1942	Hasler SA	CH	561,831		Electrical evaluation of linear expressionshas electrical networks, the impedances of which are variable according to the coefficients of these expressions, and voltages proportional to the particular variable quantities.
2387	1943	NCR Ltd	GB	564,423		Multiply by halving and doubling, electrical
2388	1944	Belling & Lee	GB	564,520		Calculating device for industrial quality control calculations (circular)
2389	1943	Thorpe R L	NZ	565,301		
2390	1943	Mirsky A	GB	565,988		Aitrraft performance - Scales on cylinder
2391	1942	Felt & Tarrant	US	566,376		Adder
2392	1942	Broido D	GB	566,728		Multiply by repeat addition- non decimal
2393	1942	Broido D	GB	566,942		Multiply by repeat addition- non decimal
2394	1943	Amdrews F M	US	567,179		Adder on cylinder pencil
2395	1941	Remington Rand	US	567,290		Adder
2396	1944	Maclean J D	GB	567,395		Air nav computer
2397	1943	English Ele ctric Ltd	GB	567,840		Mechanical device for solving triangles has a contact rod or stylus movable over a conical surface.
2398	1943	MacLean J D	GB	567,915		Circ slide rule Watch type
2399	1941	Remington Rand	US	568,666		Tabulator
2400	1942	Abax Corp	US	569,214		Mutiply by logarithmic mechanism
2401	1945	Vickers	GB	569,247		Photography disc
2402	1942	STC	GB	571,253		Electric calc with punch cards
2403	1944	Gaimster W C	GB	572,525		Computing scale
2404	1938	Wood JM D	GB	572,564		Dtrecting gunfire

#	Year	Patentee	Country	Pat Number	Copied	Descr
2405	1941	General Electric Co Ltd	GB	572,731		Electrical apparatus for the quotient of two given quantities by applying an input to terminal proportional to quantity
2406	1943	Bates E	GB	573,095		Solve triangles
2407	1945	Carr A B	GB	573,520		Slide Rule for PAYE Income Tax
2408	1943	Field M H	GB	573,941		Solve triangles circ slide rule
2409	1942	Facit	SE	574,000		ASMD
2410	1946	Ionic Labs	GB	574,345		Device for use in calculating electrical values Circ Slide rule
2411	1944	BTM	GB	574,405		Add/Subtractt
2412	1930	Wingate J L	GB	574,542		Aerial navigation
2413	1943	Parsons C D H	GB	574,743		Tide rule
2414	1946	Sulzberger A	CH	574,841		Electric calculating device
2415	1939	Vickers	GB	575,091		trig functions
2416	1943	Facit	SE	575,100		Pin wheel machine
2417	1943	Broido D	GB	575,324		Multiply non decimal
2418	1944	Fraser Glass Ltd	GB	575,332		Circ slide rule
2419	1944	Snodgrass ,B /Unique	GB	576,534		Slide Rule Calculators (For double length scales (Unique 5-10 and 10-20 rules).
2420	1943	Original Odhner	SE	576,655		ASMD
2421	1940	Boulton Paul Aircraft	GB	577,001		Aircraft gunsight
2422	1946	Raphael & Berry	\GB	577,058		Computing device for lens makers
2423	1946	BTM	GB	577,195		Product by simultaneous addition of all the partial products and carries, using elec relays
2424	1944	Broido D	GB	577,251		Reversal mechanism
2425	1944	Broido D	GB	577,330		ASMD with carriage
2426	1946	STC	GB	577,893		calculations in radix two./electrical
2427	1946	STC	GB	577,895		Electrically operated calculating equipment
2428	1946	STC	GB	577,940		Electrically operated calculating apparatus
2429	1946	STC	GB	578,041		Electrically operated calculating equipment
2430	1939	Soc de Gaz et d'Electricite du Sud-Est	FR	578,077		Luminous ready reckoner for £sd utility bills
2431	1946	MacDonald G M	GB	578557		Mechanical means for construction of Logarithmic spirals
2432	1946	MacDonald G M	GB	578,558		Spiral slide rule with vernier
2433	1943	Roffey L	GB	578,561		Days between dates, band on rollers
2434	1946	Barnes & &Coulthard	GB	578,914		Anti aircraft gunnery log. cams
2435	1944	Fleming J & R Ltd	GB	578,981		Slide rule to design bifocal lenses
2436	1943	Buttonhole Machine Co	US	579,136		Nav inst
2437	1946	Cossor Ltd	GB	579,274		Electrical calculating or measuring apparatus

#	Year	Patentee	Country	Pat Number	Copied	Descr
2438	1942	Cossor Ltd	GB	579,325		Electrical calculating apparatus for gunnery
2439	1946	Lock R H	GB	579,478		(Cylindrical slide rule - Helical
2440	1946	Woodward PM	GB	579,557		Aircraft spotter
2441	1943	Kennedy W D	GB	579,982		anti aircraft
2442	1946	Liebman D M	GB	580,252		Slide rule with two cursors
2443	1944	Arenco A B	SE	580,335		Control gunfire
2444	1946	Lindon S	GB	580,444		Abacus for £sd
2445	1939	STC	GB	581,120		gunnery
2446	1946	STC	GB	581,565		Electrically operated calculating equipment
2447	1942	deMahe J B D	GB	581,732		circ slide rule for gunnery
2448	1943	Admiralty Research Lab	GB	581,740		Potentiometer, specially adapted for use in calculating apparatus,
2449	1946	Burt & Wright	GB	581,905		Calculating apparatus for vector problems
2450	1946	Burt & Wright	GB	581,906		True wind calculator for use on aircraft
2451	1943	Facit	SE	582,052		M D
2452	1946	Wittgenstein G F	CH	582,145		Circular slide rule
2453	1943	Facit	SE	582,223		Power operated machine
2454	1946	Snodgrass B / Unique	GB	583,637		On Log-Log and Universal I slide rules for cursor design changes.
2455	1946	BTM/IBM	GB	583,973		Accounting machine Elec relay
2456	1941	Barr & Stroud Ltd	GB	584,425		Averaging range finder
2457	1947	Dahlberg O	SW	584,532		Calculating variations in the altitude of the sun circular device
2458	1943	Arenco A B	SE	585,700		Fire control
2459	1944	Marconi Ltd	GB	585,936		Electrical device for effecting the multiplication of division of independent quantities
2460	1947	Walter & Lansdown	GB	586,215		Circular slide rule with trig scales
2461	1944	Hogben, Lancelot	GB	587,220		Abacus
2462	1936	Boulton & Paul Ltd	GB	587,429		Gunnery
2463	1936	Boulton & Paul Ltd	GB	587,431		Gunnery
2464	1943	Electromechanical Research Inc	US	588,608		Electro-optical function synthesizer
2465	1944	BTM	GB	589,006		Relay totaliser
2466	1945	Hartley S	GB	589,063		Tabular calculator for solving triangles
2467	1947	Duce H J	GB	589,711		Slide rule based on Anti logarithms using coupled drums
2468	1947	Sproxton A	GB	589,758		Combined calculating-device and protractor
2469	1947	Ericsson Telephones Ltd	SE	589,764		Electromechanical calculating apparatus
2470	1943	May W J	GB	590,773		aircraft nav
2471	1947	BTM	GB	591,095		Multi slide rule tor PAYE Income Tax-Ready reckoner in Rule form

#	Year	Patentee	Country	Pat Number	Copied	Descr
2472	1946	Auto Telephone & Electric Co Ltd	GB	591,680		ASMD binary denary Elec trelays
2473	1945	Jankowski M P	GB	591,803		Firing data corrections for an artillery battery according to spotting information obtained by aerial observation
2474	1945	RAE Farnborough	GB	591,930		aitcraft navigation
2475	1945	Walker & Jameson	GB	592,115		Slide rule for mixing cement
2476	1944	Durand F	CH	594,427		slide rule & cursor
2477	1948	Carlisle C H	GB	595,756		Nomograms and slide rule device for shadows of buildings.aerial photos
2478	1948	Snodgrass & Turner	GB	596,635		Calculator for Income-tax has a slide a mounted in a stock b. The stock has a scale A of " unearned " income and a scale D of " earned "
2479	1945	Skinner L	GB	598,407		Circular slide rule for Hours worked, not log.
2480	1946	Bergquist N O	SE	599,227		Mechanical device for hours worked
2481	1948	Chase G C	US	600,330		Listing Adder
2482	1945	Felt & Tarrant	US	600,485		
2483	1948	BTM	GB	600,665		Print Adder
2484	1942	Allen-Wales	US	600,746		Cash register
2485	1945	Goodwin NE	GB	600,778		solve triangles
2486	1944	Barbey R A M	FR	600,795		Electric calculator for correlations
2487	1945	BTM	GB	600,896		ASMD & compute series Relays
2488	1945	Thomas A	GB	600,983		Accumulator for punch cards
2489	1943	NCR	US	601,122		Multply relays
2490	1943	Felt & Tarrant	US	601,375		Divide by repeat subtraction
2491	1943	Felt & Tarrant	US	601,427		Divide by repeat subtraction
2492	1948	Blundell Bros Luton Ltd	GB	602,286		Engraving process and articles engraved by such process
2493	1948	Goldstaub HH	GB	602,802		slide rules or calculating apparatus of the flat rectilinear type
2494	1948	Dietrichs J	FR	603,793		Circular slide rule
2495	1946	NCR	GB	605,926		accounting machine with inserted media
2496	1944	Podenphant H O	DK	606,528		Totalizer
2497	1945	Allen Wales	US	606,627		Totalizer
2498	1945	Allen Wales	US	606,629		Totalizer
2499	1948	Allen Wales Adding Machine Corp	US	606,632		Calculating machines- Full keyboard
2500	1948	Allen Wales Adding Machine Corp	US	606,632		Calculating machines full keyboard
2501	1946	Broido D	GB	607,622		multiply non decimal
2502	1946	Broido D	GB	607,674		multiply non decimal

#	Year	Patentee	Country	Pat Number	Copied	Descr
2503	1948	Allen Wales Adding Machine Corp	US	608,989		Calculating machines- full keyboard
2504	1948	Nation-Tellery L M	GB	612,310		Tabular calculator
2505	1948	NCR	US	612,353		Electric calculating machine
2506	1948	NCR	US	612,392		accounting machines and similar calculating machines (for Indian currency)
2507	1949	Lafleur H J H	NL	613,851		Circular discs mechanical
2508	1949	BTM	GB	614,054		Calculating machines for performing multiplication (drum based)
2509	1949	Reynal J L C	FR	615,379		Slide rule with cross bars
2510	1949	Vernaux J E P	FR	617,323		Electric calculating machines
2511	1949	Nilsson R S	GB	620,175		Calculating, accounting and similar machines
2512	1949	Vickers	GB	620,503		Electrical calculating circuits
2513	1947	Welsh & Rayner	GB	620,876		Proportional divider, for reading off from an architectural drawing of given scale the rate of heat loss through a rectangular boundary surface
2514	1949	Parkes A W	GB	621,133		Slide rule adapted for English monetary calculations
2515	1949	Parkes A W	GB	621,148		Slide rule adapted for English monetary calculations
2516	1949	IBM	US	624,467		Record card controlled calculating machines
2517	1944	Western Electric Co	US	625,430		Three-dimensional vectors in polar co-ordinate form are summed by first converting them into electrical potentials representing the corresponding Cartesian co-ordinates, adding these and converting the result into an indication of the polarcomponents
2518	1949	Combe TWB	GB	627,514		Slide rule design in plastic
2519	1949	Nilsson R S	GB	628,630		Printing mechanism for calculating machines
2520	1949	BTM	GB	629,621		Record card controlled calculating machines
2521	1949	NCR CO	US	629,707		Accounting and similar calculating machines
2522	1949	Monroe	US	629,976		Calculating machine
2523	1949	NCR	US	631,443		Calculating machine
2524	1949	Keegan E E	GB	632,330		A toy calculating device
2525	1949	Kenneth E H	GB	632,644		Circular device for decimal using £sd tabular rotating discs
2526	1950	Obrecht R E	FR	637,853		Slide rule construction The OMARO Slide Rule
2527	1950	Vickers	GB	639,928		Electrical calculating circuits

#	Year	Patentee	Country	Pat Number	Copied	Descr
2528	1950	Felt & Tarrant	US	640,347		Calculating machines
2529	1950	Felt & Tarrant	US	640,445		Key-responsive calculating machines
2530	1950	Stuivenburg C H	NL	644,154		printing mechanisms for calculating, book-keeping or similar machines
2531	1950	Blundell Rules	GB	644,944		Adjustable stock for slide rules. (also on a Heath "Hezzanith" slide rule).
2532	1950	Sbernadori P	IT	646,399		Calculating instrument for the simultaneous conversion of weights, volumes, prices and currencies slide rule Complex
2533	1950	BTM	GB	647,194		record card controlled calculating machines
2534	1950	Nunn RS	GB	647,245		Spiral gear calculator
2535	1950	Victoria Machine Tool Co	GB	647,708		A calculating device for the speed of rotation of machine tool spindles
2536	1950	BTM	GB	648,444		Controlling the printing mechanism of calculating or statistical machines
2537	1950	Ericcson Bros Ltd	GB	649,199		feeding perforated paper or the like through calculating machines etc.
2538	1951	Brooke E R	GB	649,488		Calculating apparatus
2539	1951	Batori O E	US	650,033		Navigational and industrial computer of the slide rule type
2540	1951	Peurozet LM	FR	650,320		Pocket check sum device
2541	1951	CrosfieldJ F	GB	650,536		Apparatus for controlling mechanism such as sorting, counting, tabulating or calculating mechanism
2542	1951	Heron K M	GB	650,685		Electromechanical calculating machine
2543	1951	Felt & Tarrant	US	650,728		finger-operable actuator buttons for calculating machines, typewriters etc.
2544	1951	NCR CO	US	652,446		Accounting and similar calculating machines
2545	1951	Bell Punch Co Ltd	GB	652,626		relating to calculating machines
2546	1951	Bell Punch Co Ltd	GB	652,627		Calculating machines
2547	1951	Bell Punch Co Ltd	GB	652,670		Calculating machine
2548	1951	Powers Samas	GB	653,312		Multiplying non decimal amounts
2549	1948	Remington Rand	US	653,748		True multiplier using log spiral
2550	1951	Underwood	US	654,063		Combined typewriting and calculating machines
2551	1951	NRDC	GB	654,330		Calculating machine
2552	1951	Brown J H	SE	654,565		printing mechanisms for Cash registers, calculating machinesetc.

#	Year	Patentee	Country	Pat Number	Copied	Descr
2553	1951	Bailey Meters Controls Ltd	GB	654,976		Electric calculating systems
2554	1949	Wilkinson A C	GB	655,508		Tab calc on bands pricing concrete mixes
2555	1951	Reading H G	GB	656,113		A slide rule to convert parallax observations on stereoscopic pairs of air photographs to ground elevations
2556	1947	Herzstark C	AT	656,185		(Curta)Calculating - apparatus in which numeral drums and actuating elements respectively of a totalizing counter and a revolution counter are arranged in circles around a common driving element is characterized in that the numeral drums and actuating elements respectively of the two counters are arranged in two groups on their respective circles separated by angular gaps
2557	1947	Herzstark C	AT	656,601		Curta
2558	1951	NCR	US	657,604		accounting and similar calculating machines
2559	1951	Loewy Eng Co Ltd	GB	659,754		slide rule calculators for Rolling Mills
2560	1951	IBM	US	660,455		a combined typewriter and calculating machine
2561	1951	NCR	US	660,638		Accounting machines and similar calculating machines
2562	1951	IBM	US	662,041		Calculating machine
2563	1951	IBM	US	662,767		Calculating machine
2564	1951	NCR	US	663,272		Calculating machines and similar accounting machines
2565	1949	BTM	GB	665,046		Electrical Imultiplier by partial products
2566	1951	BTM	GB	665,612		Calculating machines
2567	1949	Geborski J	GB	665,938		An abacus has eight wires, the first four of which carry ten discs each and the other four of which carry twenty, twelve, sixteen and four discs,
2568	1950	Stutchbury C P	GB	666,454		instrument for calculating the powers, e.g. 7th or 5/ 9 th of numbers and which can be read directly from a scale has two arms 1, 2 pivotally connected
2569	1952	IBM	US	669,986		Calculating machines for performing division
2570	1952	Roulston A E	AU	670,031		electrical calculating apparatus
2571	1952	IBM	US	673,287		Calculating machines

#	Year	Patentee	Country	Pat Number	Copied	Descr
2572	1952	Brunsviga	DE	673,915		Typewriters, calculating machines or other office machines
2573	1952	Duba AB	SE	673,926		Electrically operated calculating machines
2574	1952	Triumphwerke	DE	674,726		re the coupling of the platen with the platen ratchet of typewriting, calculating and like machines
2575	1946	Facit	SE	674,826		Pinwheel
2576	1952	BTM	GB	674,952		calculating apparatus
2577	1952	Hartley H O	GB	675,090		Device for stat analysis
2578	1947	Hafner E	CH	675,091		Apparatus for calculations relating to the operation of machine-tools has a drum and a roller
2579	1952	Delfin L	GB	676,416		Calculating machines
2580	1941	Otta R	CZ	676,620		calculating device a pair of drums 5, 6 on axles 3, 4 with handles at one or both ends, the drums carrying a band guided by rollers to pass beneath a narrow opening 1in a cover 1 and having printed thereon a number of tables
2581	1952	RCA	US	676,622		Calculating electron discharge device
2582	1952	Sperry Rand	US	676,672		Electronic counters or accumulators for use in digital electric calculating apparatus
2583	1952	IBM	US	678,299		Mechanism for converting pence amounts to sterling
2584	1952	Holland-Martin C G	GB	679,813		Binary decimal £sd conversions
2585	1952	Hagel & Hagel	GB	679,924		A slide-rule for use in betting (Greyhounds
2586	1952	Bull Machines SA	FR	679,993		Eectronic calculating or accounting apparatus
2587	1952	Malby ;Maciver & Ayllar	GB	680,131		Circular SR for Glider Loading.
2588	1952	NRDC	GB	680,546		Electrical calculating machines
2589	1950	Huber F J A	US	682,740		true air speed indicator ciec sr
2590	1952	Mettler E	CH	683,185		Optical projection calculator
2591	1952	BTM	GB	683,601		Calculating machines
2592	1952	BTM	GB	683,765		calculating apparatus
2593	1952	AEI	GB	684,512		calculating apparatus
2594	1952	BTM	GB	685,441		calculating machines
2595	1953	Wade-Palmer & Carter	GB	686,161		slide rule (for reinforced concrete work)
2596	1952	IBM	GB	686,178		Calculating machines

#	Year	Patentee	Country	Pat Number	Copied	Descr
2597	1950	Abeille & Aquilechia	IT	688,639		pocket logarithmic calculator has a rotatable drum mounted within a casing and marked on its periphery with logarithmic and cologarithmic scales read by a magnifying eyepiece
2598	1953	SCECA	FR	690,050		Electronic calculating machines
2599	1953	Wattier L	FR	690,518		Calculating apparatus (Plane or conical)
2600	1949	Bartelski	NL	691,310		Logarithmic calculators for astronavigational purposes
2601	1953	Bond R	GB	691,542		An improved calculating appliance for evaluating electrical quantities circ sr for fuse wire
2602	1951	Broido D	GB	693,445		on a direct-multiplying machine, a quotient digit is estimated by comparing the initial three dividend digits with ten pre- computed maximum values selected according to the initial two divisor digits
2603	1953	NCR	US	693,679		Calculating machines (Symbol printing)
2604	1953	Hunter J R	GB	699,744		Nomogram
2605	1953	Anker werke AG	DE	699,910		Cash registers, accounting machines and calculating machines
2606	1953	Bell Punch Co Ltd	GB	699,914		Improvements in or relating to calculating machines
2607	1953	Bowles E E	GB	700,910		Poly slide rule for compressed air 5 slides
2608	1953	Siemens	DE	701,590		Electric calculating apparatus
2609	1954	Powers Samas	GB	701,598		magnetic sensing of cards
2610	1953	MacKay D M	GB	701,781		Electrical calculating machines and the like
2611	1953	MacKay D M	GB	701,835		Electrical calculating machines and the like
2612	1952	Sidall & Noblett	GB	702,341		Slide rule on straight edge
2613	1953	Powers Samas	GB	703,764		Counting, calculating and record card and like controlled statistical machines
2614	1953	NCR	US	703,968		Calculating or similar accounting machines
2615	1953	Minerva Boscovice	CZ	704,735		A method for the manufacture of key buttons for typewriters, calculating machines etc.
2616	1953	Baumer P,	CH	704,959		Appliance on typewriting, calculating or accounting machines for automatically setting a top sheet to a predetermined line

#	Year	Patentee	Country	Pat Number	Copied	Descr
2617	1954	Bruni R	IT	705,491		Calculating machine (electro-magnets on counting wheels
2618	1954	Curtis H C	GB	706,185		Improvements in calculating devices for determining the nett price from a primary figure subject to percentage discounts or increments Circular SR
2619	1954	Victor Adding Machine Co	US	706,668		Paper tape guide for calculating machines
2620	1954	Skolmateriel Distribution A B	SE	706,807		Devices for illustrating and teaching the elementary technic of calculating
2621	1950	NCR	US	706,871		Tabular computing device associated with an accounting machine has a receptacle for cards bearing lines of data arranged in groups, a face to the receptacle having apertures corresponding to the groups and movable differentially under key control to align each aperture with a selected line in its group, and signalling devices also key controlled to signalize a particular one of the selected lines
2622	1954	Elliott Bros Ltd	GB	707,371		Improvements in or relating to calculating machines
2623	1951	Herzstark C	AT	707,487		Pocket multiplier the CURTA
2624	1954	Olympia werke	DE	707,645		Printing mechanisms for calculating and like machines
2625	1954	Blackwell H A B	GB	707,740		circ sr speed /time/distance
2626	1954	McCorquodale &Co Ltd	GB	707,762		Calculating devices for photo exposure
2627	1954	Soar G B	GB	708,473		Improvements in or relating to calculating apparatus Circular SR forwoven wire mesh
2628	1954	Batori O E	US	708,811		Navigational computer of the slide rule type
2629	1954	Quillinan M J	US	708,867		Slide rule (Construction
2630	1954	Batori O E	US	708,893		Slide rule for air navigation
2631	1954	Green G W A	GB	709,026		Slide-rule for spring calculations
2632	1954	IBM	GB	709,030		Record card controlled calculating means
2633	1954	Jackson E R	GB	709,153		Calculating apparatus for use in the balancing of rotatable bodies
2634	1952	G E Co Ltd	GB	713,655		cylinder slide rulewith trig fns for vector quantities
2635	1953	Chambers F J	GB	714,205		circ sr nav
2636	1951	Grandadam R C M	FR	715,477		A logarithmic calculator relating the factors involved in the optimum use of machine tools

#	Year	Patentee	Country	Pat Number	Copied	Descr
2637	1954	Victor Adding Machine Co	US	716,304		Removable logotype structure for calculating machines
2638	1964	Olympia werke gmbh	DE	716,830		A keyboard for ten-key calculating machines
2639	1964	Olympia werke gmbh	DE	717,314		An operating key for typewriters, calculating machines and the like
2640	1951	Altenberger,Hirt & Westinger	DE	717,432		Calculating machine for the four arithmetical operations (addition, subtraction, multiplication and division)Pin wheel
2641	1957	Bull Machines S A	FR	717,869		Addition and subtraction operating device for electric calculating machines operating in the binary system
2642	1959	Abeille & Aquilecchia	IT	719,080	See JOS	Logarithmic calculator with optically projected scales
2643	1959	IBM	US	719,850		Electrical calculating apparatus
2644	1955	Waldbergen L A T	DE	721,437		Combined calculating and writing machines
2645	1954	Hall & Harding	GB	722,148		Magnifying devices for slide rule cursors. (Blundell "Magnex" cursor. A half-round lens to clip onto the normal cursor,supplied to fit all standard Omega, Academy and Janus models-)Hopp)
2646	1954	Bull Machines SA	FR	722,509		Electrical calculating apparatus
2647	1954	Assoc British Oil Engines	GB	723,553		Logarithmic calculator for calculations relating to marine propulsion engines and their sterngear
2648	1955	Bull	FR	723,774		Arrangement for shifting the multiplicand in a calculating machine
2649	1954	Beesley O	AUS	726,318		tab calc slide £sd todecimal
2650	1955	NCR	US	726,703		Accounting and similar calculating machines
2651	1952	Walker,Walker,O;Donnal & Archer	ZA	728,242		Apparatus for the determination of polynomial functions and the solution of algebraic equations
2652	1955	Powers Samas	GB	729,488		Calculating machines controlled by statistical recordcards
2653	1955	Olympia werke	DE	730,711		Calculating machine
2654	1955	Olympia werke	DE	730,883		Process for manufacturing keys provided with figures, letters or other symbols, for registering and calculating machines typewriters and the
2655	1955	Olivetti spa	IT	731,140		Electric pulse counting and calculating apparatus
2656	1955	Victor Adding Machine	US	731,620		Calculating machine

#	Year	Patentee	Country	Pat Number	Copied	Descr
2657	1955	Friesen J R	CAN	732,460		Calculator for determining the centre of gravity of a load carrying structure
2658	1955	Arva S A	CH	734,158		Calculating machine
2659	1955	Brooks G	GB	734,595		Tab calc medicinal dose computer
2660	1955	Powers Samas	GB	734,789		Calculating machines controlled by statistical record cards
2661	1951	Exacta BuromaschinenGmbh	DE	736,681		Control mechanism for calculating machines
2662	1951	Brunsviga	DE	736,873		Tens transfer arrangements in calculating machines
2663	1951	Powers Samas	GB	737,107		Improvements in printing mechanism for calculating machines
2664	1952	Faber-Castell	DE	737,334		A straight slide rule, in which the slide 2 is exposed on one face only of the stock 1, has co-operating scales on both sides of the stock and a cursor for use with these scales extending behind the stock
2665	1955	Blom-Bakke A	NOR	738,488		Calculating apparatus for use in air navigation
2666	1953	Robinson & Cleaver Ltd	GB	738,591		Circular slide rule price interest
2667	1953	Daimler-Puch AG	AT	738,692		Chart for anti friction bearings
2668	1953	NCR CO	US	741,039		Calculating machine
2669	1955	Cham S & Wang L J	HK	741,389		circ slide rule astro nav
2670	1955	Humphriss L E	GB	741,890		Multi-sliderule for use during the preparation of mix batch recipes or formulae for comestibles
2671	1955	Powers Samas	GB	742,084		Accumulator mechanism for record card controlled and other calculating machines
2672	1955	Olympia werke	DE	742,911		Control arrangement for motor driven calculating or the like accounting machines
2673	1955	Lowson K	GB	743,826		Slide rule cursor for decimal point
2674	1954	Potter and Blakely	GB	745,674		A slide rule for evaluating the heat transmission formula employed in calculations relating to lagged pipes,
2675	1953	Gray C H	AUS	746,071		Device for photo exposure
2676	1956	Elliott Bros	GB	747,712		Digital calculating machines
2677	1956	Regentrop H B P	DE	749,157		Ribbon spool for typewriters and calculating machines
2678	1956	STC	GB	749,440		Electrical calculating equipment
2679	1956	KenzleApparat Gmbh	DE	750,226		Calculating mechanism in petrol pumps
2680	1956	NCR CO	US	750,264		Calculating machines

#	Year	Patentee	Country	Pat Number	Copied	Descr
2681	1954	Sander R A	AUS	751,420		Circ.slide rule with bevel drive & lens
2682	1956	Heinze R	DE	751,633		Key-heads for typewriters, calculating machines and the like
2683	1955	Thornton	GB	754,938		PIC Patent for resilient inserts in stock.
2684	1953	STC	GB	756,144		Calculating-apparatus, for determining the saving effected by increasing the power factor of an electrical installation
2685	1954	Ateliers Marcel Pegard	BE	757569		device for the correlation of factors affecting optimum use of machine tools has upper and lower scale bearing drums
2686	1954	Bell Punch Co Ltd	GB	766,947		Means are provided in a race-course totalizator for taking a printed record of the numbers displayed by the individual contestant counters and preferably by the totals counter
2687	1957	IBM	US	770,487		Electrical calculating apparatus
2688	1957	Felt & Tarrant	US	771,816		Calculating machines
2689	1957	Olympia werke	DE	772,750		Setting mechanism for ten-key calculating machines
2690	1957	Krauss L	US	772,967		Apparatus for calculating the volume of solid articles of regular cross sections throughout their length
2691	1961	Eliezer Zur	IS	773,366		Calculator SR with wide scale
2692	1961	Triumphator	DE	774,839		Calculating apparatus Mech
2693	1961	Unilever Ltd	GB	776,032		Calculating devices
2694	1959	Int Std Elec Corp	US	777,286		Calculating meansCheck Symbol apptus for keying in device
2695	1959	IBM	US	777,440		Tabulating and calculating machine
2696	1959	BTH Ltd	GB	777,721		Marine navigational calculating devices
2697	1954	Electricite de France	FR	777,800		Thomas-type multiplying apparatus, comprising stepped toothed drums settable to the digits of a multiplicand…
2698	1957	Fischer R	IS	778,556		Helical slide rule Otis King type

#	Year	Patentee	Country	Pat Number	Copied	Descr
2699	1955	Hoch F W	US	778,633		A circular disc slide rule has annular bands of different colour or shade on the base member 10, Fig. 3, and the superposed disc 12, Fig. 4, has windows overlying these bands and so arranged as to indicate the decimal point position in the result from the combination of colours or shades visible.
2700	1954	Naulet L E H	FR	780,296		A case combined with a conception period calculator
2701	1955	BTM	GB	780,431		Electronic calculating apparatus
2702	1955	BTM	GB	780,596		Record card controlled calculating apparatus
2703	1955	EL-RE-MA SA	CH	780,953		Electric calculating machines
2704	1955	EL-RE-MA SA	CH	780,955		Electric calculating machines
2705	1946	IBM	US	781,295		Calculating machines
2706	1955	Broadhurst C J	GB	782,873		A slide rule of simple construction has a flexible slide B
2707	1957	Powers Samas	GB	783,718		Calculating machine
2708	1952	Alden PP	CH	784,500		Calculator device re fertility periods cylinders
2709	1957	Marconi	GB	785,230		Electric analogue calculating instruments
2710	1957	ELDI gmbh	DE	785,285		Calculating and book keeping machine
2711	1957	ELDI gmbh	DE	785,614		Numeral storer for calculating, book-keeping or the like machines
2712	1957	Monroe	US	787,069		Sign detection mechanism for calculating machine registers
2713	1957	Triumph	DE	788,071		A numeral storing device for electro-mechanically operated book-keeping, calculating or the like machines
2714	1956	Loblite Ltd	GB	789,629		Pocket tab calc with cursor
2715	1957	NCR	US	789,798		Calculating or similar accounting machines
2716	1958	Sunvic \controls Ltd	GB	794,109		Electronic counting apparatus
2717	1956	Ulavi R	IT	794,161		Tab calc mult slides
2718	1956	Durand F	FR	794,477		Slide rule cursor design
2719	1958	Elec de France	FR	794,767		multiplying machine of the stepped barrel and pinion-type
2720	1958	Gen Electric	US	796,322		Improvements relating to digital calculating apparatus
2721	1958	Gen Electric	US	796,323		Improvements relating to electronic digital calculating apparatus

#	Year	Patentee	Country	Pat Number	Copied	Descr
2722	1956	Constructors John Brown	GB	798,697		Transparent member, bearing a series of parallel linear scales 2 graduated as described below and a perpendicular logarithmic
2723	1958	Siemag gmbh	DE	799,065		calculating-machine typewriter combina-ation
2724	1958	Siemag gmbh	DE	799,137		Contact keyboards for controlling typewriters and calculating, accounting and like machines
2725	1958	Poulin P	CH	799,404		Knitter's calculating disc
2726	1958	Guppy R E	GB	800,462		Calculating device for use in connection with photographic enlargement and reduction
2727	1958	Triumph Werke	DE	801,088		Key-operated machines such as typewriters, calculating machines and tabulating machines
2728	1958	STC	GB	802,692		Electrical calculating equipment
2729	1958	Marsan C	US	808,372		Slide rule or similar educational appliance
2730	1958	NCR	GB	808,651		Accounting or similar calculating machines
2731	1958	Gen Elec Co	US	809,930		Calculating devices
2732	1959	Deschartre G	BRAZ	811,673		Slide rule cylinder on pencil
2733	1955	Boyce & Meanwell	GB	815,464		slide rule for metal-bending calcs
2734	1957	Nicholas J W	GB	816,443		Slide rule for haemotology
2735	1959	ICT	GB	819,641		Calculating apparatus
2736	1959	Goodson A E	GB	819,920		Tab calc bridge scorer
2737	1956	Gerber Scientific Inst Co	US	822,420		analysis of graphs
2738	1959	ICT	GB	823,374		Electronic calculating apparatus
2739	1957	Scientific Leather Measurement Ltd	GB	824,794		Tab calc for leather cutting
2740	1959	NRDC	GB	825,228		Navigational calculating instruments
2741	1956	Spence T	GB	826,472		Tab calc pricing
2742	1956	Heitor A LC	POR	828,841		Circ slide rule sr Aeronav
2743	1960	Paristor Ltd	GB	829,868		Slide rule to solve equations
2744	1956	Arici G	*IT*	831,066		Circ slide rule for concrete
2745	1960	Pearch L C	GB	832,563		Calculating device for use with agricultural spraying machines Circular SR
2746	1960	Levi R	FR	833,531		Calculating apparatus for resolving problems of distributionAnalog
2747	1960	Bull Machines SA	FR	833,795		Calculating apparatus
2748	1960	FIMA	IT	836,818		Accumulator for calculating accounting machines and the like
2749	1960	DeccaRecord Co Ltd	GB	839,434		Improvements in or relating to navigational calculating apparatus
2750	1960	Brunsviga	DE	839,438		Device for the remote operation of calculating machines

#	Year	Patentee	Country	Pat Number	Copied	Descr
2751	1960	Spingies &Rose	DE	840,694		Electrically-interconnected mechanical calculating apparatus based on table
2752	1960	Babbington H A	GB	841,528		Improvements in or relating to instruments of the slide-rule or like type for makingcalculations appertaining to time, speed and distance
2753	1960	Stewarts & LLoyds	GB	842,008		Apparatus for calculating the necessary dimensions for the intersection of tubes and/or sections
2754	1960	IBM	US	842,042		Electrical calculating system
2755	1960	Stephenson H W	IQ	842,450		Calculating instrument for field surveying
2756	1960	Vitamins Ltd	GB	843,403		Circular slide rule
2757	1960	Westinghouse	US	844,894		Electrical calculator apparatus
2758	1960	STC	US	845,216		Electrical calculating circuits
2759	1960	Brttish Telecomm	GB	846,107		Electric calculating equipment
2760	1960	GEC Ltd	GB	847,121		Electrical calculating circuits
2761	1960	Short Electricals Ltd	GB	849,233		Apparatus for calculating intensity of illumination
2762	1960	Carlsen & Carlsen	DK	849,752		10-key calculating machines
2763	1960	Babbington H A	GB	851,003		Slide-rule for calculations of speed, time and distance/
2764	1960	Dirks G	DE	852,182		Cyclically operable electrical calculating apparatus
2765	1960	Julich W	DE	853,122		Power-actuated type bar drive for typewriters, printing calculating machines, or the like
2766	1960	Landbouwertuigen BV	NL	854,356		Instruments for calculating the percentage of plantsto be removed
2767	1960	Lapp	DE	854,504		Power-actuated typewriting calculating machines with tape-punch attachment
2768	1960	NCR	US	856,242		Calculating or similar accounting machines
2769	1959	Minister of Aviation	GB	859,063		Slide rule re Gamma radiation
2770	1960	Comptometer Corp	US	860,605		A calculating-recording apparatus
2771	1961	Kienzle gmbh	DE	862,338		Electric calculating apparatus
2772	1961	de Havilland Aircraft Canada	CAN	863,422		Centre of gravity calculator
2773	1961	NRDC	GB	866,215		Electrical calculating devices
2774	1961	Bell Punch Co Ltd	GB	868,756		Calculating machines
2775	1961	Bell Punch Co Ltd	GB	868,757		Calculating machines
2776	1961	Bell Punch Co Ltd	GB	868,758		Calculating machines
2777	1961	Thornton A G	GB	878,056		Scales for quadratic equations - reciprocal scales
2778	1961	Thornton A G	GB	878,057		As 878,056, but with cubic equations.

#	Year	Patentee	Country	Pat Number	Copied	Descr
2779	1961	Muirhead L A	GB	881,480		Circ slide rule for vehicle fuel consumption
2780	1961	Goulter V H	AU	882,415		Calculator for fractions and dress-making
2781	1959	Horton W G	GB	885,754		Curious slide rule
2782	1960	NCR	US	909,935		Calculating or similar accounting machine
2783	1961	NCR	US	912,475		Accounting or similar calculating machine
2784	1961	NCR	US	912,785		Accounting or similar calculating machines
2785	1962	Pickett & Eckel	US	912,872		Log scales.
2786	1962	Burroughs	US	917,031		Combination calculating and recording machines
2787	1962	Burroughs	US	917,032		Control mechanism for calculating machines
2788	1962	Worman G M	GB	917,515		circ sr
2789	1963	Sangwin G W F	GB	919,063		Slide rule. Hopp note:The Magnameta oil tonnage calculator. A large linear slide rule.
2790	1963	Bendix Ericcson U K LTD	GB	919,991		Calculating machines
2791	1963	Hydroforce Ltd	GB	921,589		Calculating device
2792	1963	Bailey Meters & Controls Ltd	GB	923,251		Calculating networks
2793	1963	Cheminant Le T J	AUS	923,305		circ slide rule pricing $sd
2794	1963	Giilbert Gilkes & Gordon Ltd	GB	923,979		Calculating device
2795	1963	Elektronische Rechen Masch IND	DE	924,164		Calculating device
2796	1963	Bell Punch Co Ltd	GB	925,161		Calculating machine
2797	1963	Bell Punch Co Ltd	GB	925,163		Calculating machines
2798	1963	Bell Punch Co Ltd	GB	925,164		Calculating machines
2799	1963	Bell Punch Co Ltd	GB	925,309		Calculating machines
2800	1963	Bell Punch Co Ltd	GB	929,557		A calculating system
2801	1963	Olympia werke	DE	931,679		A ten-key calculating machine
2802	1963	Ruf Buchhaltung AG	DE	932,097		Adjustment device for a pin-register of an accounting or calculating machine
2803	1963	Burroughs Corp	US	935,170		Ten key calculating machine
2804	1963	Titus Mfg Corp	US	935,569		Slide rule rfor ventilating engineers
2805	1963	Armstrong Cork Co Ltd	US	935,584		Slide rule for pricing areas in £sd
2806	1963	TV Audience Measurement	GB	936,130		Calculating instruments sr

#	Year	Patentee	Country	Pat Number	Copied	Descr
2807	1963	ABDEM Ltd	GB	937,921		Multiplication device forms all the partial products of the several pairs of digits in the multiplier and multiplicand and collects the relevant partial products to form the final product, using electric selectors and printed circuits. First embodiment. In a wage calculator
2808	1963	EMI Ltd	GB	938,100		Circuit arrangements for calculating the area under a curve
2809	1963	Thornton A G Ltd	GB	944,634		Manufacture of injection moulded stock, held by moulded ends.
2810	1963	Lebar M L	FR	956,057		Mechanical and electronic calculator
2811	1963	Finsider	IT	966,779		A method for proportioning the humidifying water in a finely divided mixture undergoing agglomeration by ignition on a continuous grate
2812	1964	Hickson M	GB	971,192		Calculating device
2813	1964	Addmaster Corp	US	978,903		Calculating machine
2814	1964	Addo Ltd	GB	979,150		Calculator for teaching simple arithmetic
	1965	Boutillon S A	FR	981,717		Improved indicating and calculating apparatus
2816	1965	Addmaster Corp	US	982,800		Calculating machine
2817	1965	Lazare C R P	FR	984,996		Device for air navigation
2818	1965	IBM	US	987,609		Digital calculating devices
2819	1965	CSIR	GB	988,744		Solar calculator
	1965	IBM	US	993,934		Punched-card-operated calculating machines
2821	1965	Sud Aviation	FR	996,747		Electrical calculating apparatus for dividing or multiplying any number by a given factor
2822	1965	Sud Aviation	FR	997,186		Calculating measuring apparatus, more particularly a fluid dispenser
2823	1965	Walther	DE	1,000,552		Adding or calculating machines
2824	1965	Starret R M	US	1,000,776		Electrically powered keyboard and transfer mechanism for ten key adding or calculating machine
2825	1965	Commissariat Energie Atomique	FR	1,001,096		Apparatus for calculating automatically correlation factors and functions
2826	1965	Monroe	US	1,004,384		Decimal system for calculating machines comprising an overcapacity control

#	Year	Patentee	Country	Pat Number	Copied	Descr
2827	1965	Budhungs maschinenwerk	DE	1,007,374		An electronic store adapted to receive sub-products from calculating machines
2828	1965	Addmaster Corp	US	1,007,425		Calculating machine
2829	1965	Smith S & Sons Ltd	GB	1,014,680		Apparatus for calculating the weighted average of two or more numbers
2830	1965	Wyle Labs	US	1,031,235		Calculator apparatus
2831	1966	Dennert ,G & H	DE	1,039,127		Slide rule cursor
2832	1966	Chorton J	GB	1,046,023		Slide rule
2833	1968	Olympia werke	DE	1,068,424		Improvements in or relating to attachments for front feeding and ejection of papers in typing,calculating and accounting machines
2834	1968	Wyle Labs	US	1,069,128		Calculator decimal point alignment apparatus
2835	1968	Wyle Labs	US	1,069,375		Calculator apparatus for distinguishing meaningful digits
2836	1964	Solartron	GB	1,069,698		An electrical calculating device
2837	1969	Wang Labs	GB	1,071,726		Improvements in or relating to calculating apparatus
2838	1967	Olympia Werke	DE	1,074,171		Improvements in or relating to calculating machines
2839	1967	De Wilde G	NL	1,074,677		Analogue computer for calculating bending moments and/or shearforces of ships
2840	1967	NCR	US	1,079,594		Improvements in or relating top fluid pressure operated calculating machines
2841	1967	Dowty Group Services	GB	1,082,952		Slide rule
2842	1967	IBM	US	1,085,528		Improved calculator
2843	1967	Friden	US	1,090,761		Calculator
2844	1967	Singer	US	1,090,762		Calculator
2845	1967	Singer	US	1,090,763		Calculator
2846	1967	Friden	US	1,090,764		Electronic calculator
2847	1967	Aquitaine Petrole	FR	1,093,132		Accumulative flow calculator
2848	1967	Metalgesellschaft A G	DE	1,096,296		Method of controlling the operation of moving grate sintering installations
2849	1967	Leeds & Northrup	US	1,102,847		Estimated tap temperature calculator for basic oxygen furnace
2850	1967	Carlsen & Carlsen	DK	1,104,143		Calculating machine
2851	1967	Bell Telephone Co	US	1,104,407		Digital calculating arrangements
2852	1967	ComputronCorp	US	1,105,694		Calculating machine
2853	1967	ComputronCorp	US	1,105,695		Calculating machine
2854	1967	Wickman Scrivener Ltd	GB	1,107,651		Calculating device for use with centreless grinding machines

#	Year	Patentee	Country	Pat Number	Copied	Descr
2855	1967	List H	AT	1,110,070		Apparatus for calculating the integrals of time-dependent functions
2856	1967	Ng KekHaut	SING	1,112,214		The device is used for calculating the value of the expression Kp/p+q where K is the length of the scale AB and p, q are the readings of the cursors on the scale LM.
2857	1967	Rhone Poulenc S A	FR	1,113,256		Slide rule
2858	1967	Braun W F	CH	1,113,699		A device for calculating exponential functions
2859	1968	Blundell-Harling/W.H. Smith	GB	1,114,917		A slide rule having a cursor 10, is provided with rubber feet 19 at each end to hold the cursor clear of a flat supporting surface. The inner face of the cursor is shaped to stand clear of the scales and coated with lacquer to form two tinted bands above the scales. The tinted bands may be formed on the inner or outer face of the cursor
2860	1968	Fox J	US	1,118,108		Calculating machine
2861	1968	Texaco Inc	US	1,121,511		Analog calculator
2862	1968	Regler werke Teltow	DE	1,122,664		Pneumatic calculating apparatus
2863	1968	Bell Punch Co Ltd	GB	1,124,623		Improvements in or relating to calculating machines
2864	1968	Richardson A H F	GB	1,125,293		Device for calculating the check digit associated with an account number has a sheet having thereon a circular spaced sequence of numerical markings divided into segments…
2865	1968	ELDATA gmbh	DE	1,127,840		Keyboard for electronic accounting, invoicing, computing and calculating machines
2866	1968	Pepper PM	US	1,128,213		Slide rule for trig
2867	1968	Ruys F W	NL	1,129,206		Apparatus for actuating a result unit of a calculating machine, and the like, each time when the apparatus is operated
2868	1968	Arkless G F	GB	1,131,119		Calculator for use in angling
2869	1968	BAA	GB	1,131,329		Calculator for use in computing charges made by time, car parks
2870	1969	Bishman Mfg Co	US	1,147,382		Slide rule for wheel alignment
2871	1969	Anker werke	DE	1,149,952		Cash registers or calculating machines
2872	1969	Kaye A & V Ltd.	GB	1,159,805		Calculator for comparing parameters given in fractional form, three relatively movable members bearing logarithmic scales,

#	Year	Patentee	Country	Pat Number	Copied	Descr
2873	1969	Heppenstall P & Mear H	GB	1,168,995	Ref	Circular Slide Rule ("Rotoscale")
2874	1973	Technolem	RUM	1,311,574		Slide rule & cursor
2875	1973	Britsh Thornton Ltd	GB	1,315,623		Slide rule cursor
2876	1973	Britsh Thornton Ltd	GB	1,316,192		Double sifded slide rule cursor
2877	1973	Technolem	RUM	1,326,655		rectilinear slide rule for calculating pi x and pi x2
2878	1975	Cohen M	US	1,386,730		ISide rule guide to intravenous therapy
2879	1975	Magyar…	HUN	1,402,412		slide rule for use in the interpretation of gas-chromatograms
2880	1976	Faber-Castell	DE	1,423,934		Slide rule with digital calculator
2881	1976	Whitfield L	GB	1,450,933		A slide rule bears four logarithmic scales 6, 7, 8, 9 indicating respectively length or area, weight, weight per unit length or per unit area and number of pieces
2882	1976	Grand C	FR	1,456,688		Slide rule for losses along pipes
2883	1974	Blundell	GB	1,469,755		Cursor for a slide rule or one half of a double- sided cursor for a double-sided slide rule com- prises two flanges
2884	1978	Salvia Werk	DE	1,517,976		Circular slide rule for the electrolyte deficiency in infusion therapy
2885	1978	Blundell-Harling & Peters M W	GB	1,530,487		Portland dead reckoning calculator. A plane angle solver for sea and air navigation, simple disc calculator on the back face.
2886	1979	Lohf & Lillipaul	DE	2,009,641		Apparatus for Truing Grinding Wheels with an Involute Profile
2887	1980	Craig G	GB	2,035,640		Instructional device of the slide rule type
2888	1981	British Aerospace	GB	2,080,589		The "Sintalator" to set milling machine
2889	1985	Riehle H	DE	2,110,848		Slide rule
2890	1984	Mono Containers Ltd	GB	2,122,874		Receptacles etc. with relatively rotatable walls, as calculator
2891	1985	Duce H J	GB	2,148,564		Logarithmic calculating appliance
2892	1985	Zhang Tianze ,Tsinlien Trading Co Ltd	HK	2,155,672		Slide rule for shaping blanks
2893	1985	UPAT gmbh	DE	2,157,465		Disc calculator for loading on dowels
2894	1985	Crane Ltd	GB	2,157,863		Calculator for determining flow rate through a valve
2895	1986	Smith C G	GB	2,167,015		Proportional rule device for defining an area on a plane surface
2896	1986	Swift R B	GB	2,175,543		Board aid to positive guided drawing and sketching in perspective

#	Year	Patentee	Country	Pat Number	Copied	Descr
2897	1992	McKenna & McKenna	GB	2,254,953		Musical Transposition slide rule
2898	1993	Forster B C	GB	2,262,182		Harmony slide rule
2899	1994	Cox P	GB	2,278,482		Mathematical learning aid
2900	1996	Yeo D G	GB	2,292,220		Levelling aid
2901	1998	Hadjigeorgiou A C	CY	2,321,985		Slide rule add, subtract
2902	2001	Liebherr Werke Ehingen	DE	2,353,514		Calculating crane loading
2903	2000	Stone C A	GB	2,364,412		Abacus

Extracts in ALPHABETICAL ORDER OF INVENTORS

Abbott P W H 15498/1906 Trig teaching device

15,498. Abbott, P. W. H. July 9.

FIG.3.

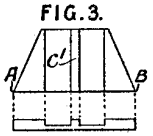

FIG.4.

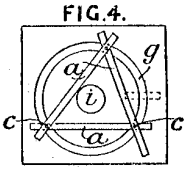

Calculating - apparatus. — Relates to appliances for use in and the teaching of geometry, trigonometry, mensuration, &c. A number of graduated bars *a*, Fig. 1, are connected together by means of slots *b* and screws or catches *c* to form triangles, quadrilaterals, parallel lines with a transversal, &c. A protractor *d* is attached to each screw *c*. Fig. 3 shows an adapter for maintaining two bars *a* at right-angles. One bar fits with its slot *b* over a tongue c^1 and the other bar rests against the base A B. Fig. 4 shows an adapter provided with a circular guide-groove *g* for the screws *c* and a central protractor *i* to which spare bars can be attached.

FIG.1.

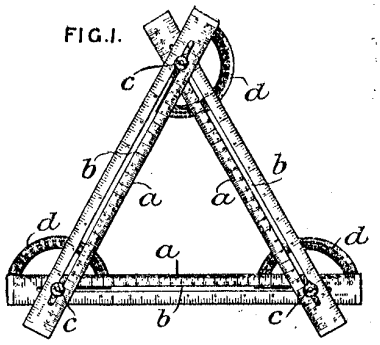

Abdank Abakonowicz 5519/1882 Planimeter

5519. Imray, J., [*Abdank-Abakanowicz, B.*, and *Roosevelt, C.*]. Nov. 20.

Calculating (integrating) apparatus &c.—A cylinder C, Fig. 2, carried in suitable bearings, has a disc R, pressed against it and moved in a direction parallel to its axis. The disc is mounted on a swivel and will be rotated in proportion to its obliquity to the axis of the cylinder. The cylinder is a magnet, and under its poles N, S are bars G attached to a bar L which is moved by the rotation of the cylinder. A pencil is attached to a carrier H which slides on the rods L and T, and thus a line is drawn representing the integral. To find the are a of a curve, an apparatus shown in Figs. 3 and 4 is used. On a bar having end frames A, B, are two slide carriages C, D, adjustable as to distance by a set-screw *v*. On the carriage C is mounted the

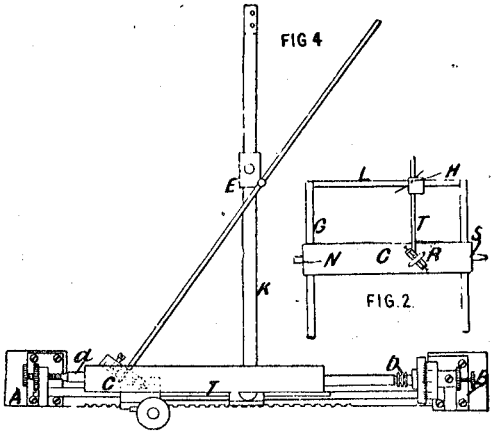

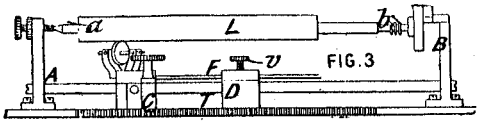

swivel of the disc and from it a bar F, parallel to the plane of the disc, extends to a slide E on the bar K. The bar F by its movement varies the inclination of the disc to the axis of the cylinder L, against which the disc is pressed by a spring. The rule joining A and B is placed in coincidence with one of the co-ordinate axes of the curve and a pointer on E is made to follow the curve, the disc being thus made to travel along the cylinder and turn it on its axis *a*, *b*. The distance moved through by a point on the surface of the cylinder multiplied by the distance of K from the axis of the disc gives the area. The disc may be kept in a fixed position and the cylinder arranged to travel. The disc may in some cases be replaced by a nut working on a screw on the cylinder, but movable therefrom by the action of electromagnets. Two threads, one right and one left handed, are required.

Abridged also in Classes *Electricity &c.*, *Divs. III.* and *IV.*; *Governors &c.*

See [12]

Acrey C M 8368/1912 Multiplier for tax Gears

8368. Robertson, T. E., [*Acrey, C. M., Acrey, W. B.,* and *Acrey, B. L.*]. April 9.

Multiplying-apparatus.—The tax upon a given valuation and the proportions of the tax for various purposes, or the like results for capital and interest, are computed and registered upon counters by setting the principal amount upon a hand-operated machine. Fig. 1 shows the rotary setting-handle 10 and the gear-wheels 7, 8, 6 whereby its operation rotates a main shaft 5, upon which are gear-wheels of various sizes, each connected by a sprocket-chain 12, Fig. 3, with a properly proportioned pinion 13 upon one of the counters 18. The gearing is

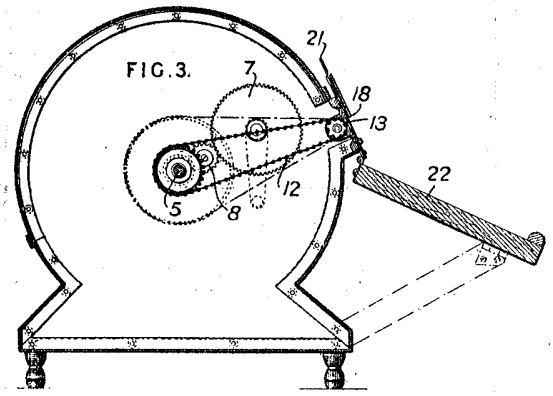

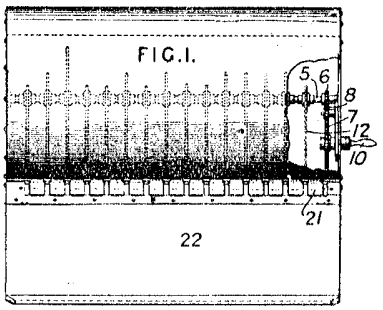

so proportioned that each of the counters registers a certain fraction of the amount set by the handle, which is itself registered upon the end counter of the series, and adjacent to each counter is a card 21 stating the quantity to which it is assigned. A ledge 22 is provided for supporting papers. In modifications, the counters may be arranged in two rows, one above the other, and they may be driven frictionally from a cone upon the main shaft, which is then placed at an angle. The counter wheels may have types for recording by means of simple printing-apparatus, and an adjustable decimal-point slide may be provided.

Acworth J J 3873/1901 Slide rule photo exposure

3873. Acworth, J. J. Feb. 23.

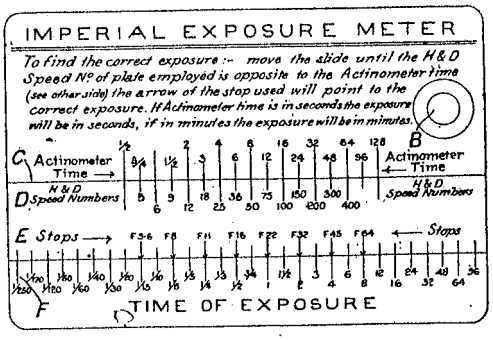

Slide rules.—Relates to a slide rule for calculating photographic exposure. The numbers representing the speed numbers and the stops are on the slide of the rule, namely, the scales D, E ; the scales C, F for the actinometer time and the time

Adams W M 2379/1872 Solution of triangles

2379. Adams, W. M. Aug. 9.

Calculating - apparatus for the solution of triangles. The apparatus consists of three graduated bars, which may be arranged to form any triangle A, B, C, and two graduated arcs *e*, *h* arranged in conjunction with the bars. On the base plate *a* are three parallel bars *b*, b^1, b^2 to the central one *b* of which is pivoted a bar A, C which moves over the arc *e* and carries a slide *f*. To the slide *f* are pivoted two other slides f^1, f^2 one on each side. In the slide f^1 works the bar A, B pivoted at B to the quadrant *h* which slides along the parallel bar b^2 on the base. The other slide f^2 works over a graduated vertical bar fixed between slide blocks g^1, g^2 moving along the bars b^1 and *d*; this bar gives the altitude of the triangle. The bar A, B has a slide or index-finger moving over the quadrant *h*, which has a slide block g^3 moving over the bar *d* at the top of the apparatus. Any triangle may thus be set out and solved, as well as problems in proportion, square roots, equations, &c.

FIG.1.

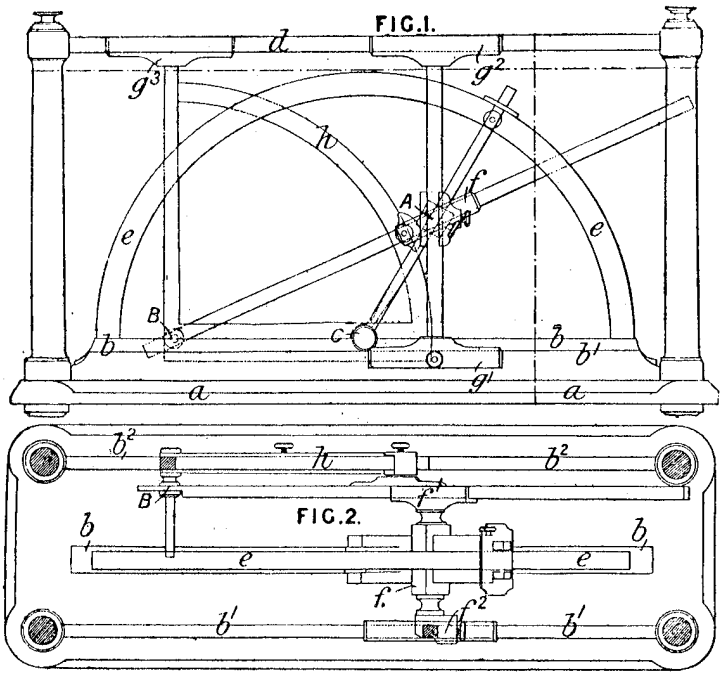

FIG.2.

Adderator AB 18763/1913 Adder

18,763. Aktiebolaget Adderator. Aug. 20, 1912, [*Convention date*]. *Void.* [*Published under Section 91 of the Act.*]

Adding and subtracting apparatus; selecting denomination. — A single-bank, key-operated, calculating-machine having a single differentially-actuated item type-wheel mounted on a carriage and moved step by step across the machine to actuate in succession the wheels of a totalizer, is adapted to perform subtraction by the addition of complementary digits combined with an additional unit movement of the units wheel of the totalizer. The item-wheel is provided with two series of types arranged in opposite directions on said wheel and when subtraction is being effected a displacement is given to the wheel to bring the "9" digit of the complementary series to the printing point, and at the same time the unit movement is imparted to the units wheel of the totalizer. The depression of a key, through an arm k, sets an item type-wheel a and operates a printing-hammer h; the wheel a moves with the carriage b step by step and is adapted to advance the totalizer-wheels e in succession an amount depending on the key depressed. The keys as well as the type-wheel a have two series of digits thereon in reverse order, one for addition and one for subtraction, and distinguished by their form, colour, or position. When subtraction is being performed, the wheel is rotated to bring the "9" digit opposite the printing-hammer by means of a setting-lever mounted on a shaft s engaging an arm t attached to the wheel a. The wheel a is locked

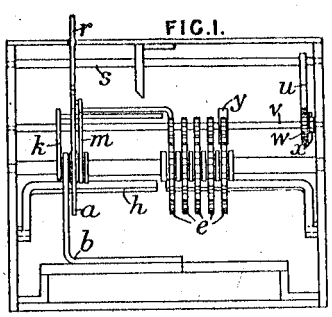

in this position by a pawl o on a disk m mounted on the carriage and fixed relatively to this wheel. To complete the subtraction operation, the units wheel of the totalizer is advanced a single unit by means of a segment u on the shaft s engaging a pinion w having a ratchet connexion with a pinion x on a shaft v, which is provided with a star-wheel y engaging the units wheel. A two-colour ribbon may be provided to distinguish the subtracted from the added items. A modified arrangement is described wherein the additional movement given to the units wheel is effected during the calculating operation, and not on the adjustment of the lever r. This arrangement is adapted for repeated subtraction operations.

Adderator AB 19089/1913 Adder

19,089. Aktiebolaget Adderator. Aug. 28, 1912, [*Convention date*].

Adding-apparatus; selecting denomination. — A key set and operated calculating-machine, having a single bank of keys and a travelling carriage for the totalizing-counter, is provided with means whereby the numeral keys are employed to set the carriage to the particular denomination required. In this type of machine, the depression of a key rotates an arm a which, through a coupling-device f, actuates in succession the numeral-wheels d of the totalizer. The arm a is mounted on

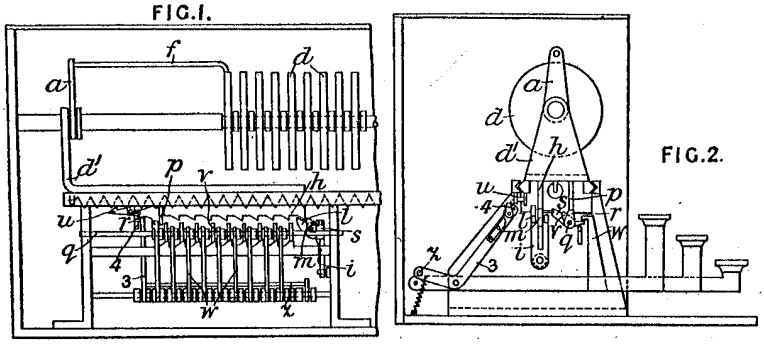

a travelling carriage d^1, which is moved step by step by means of an escapement device comprising a rack h and an arm i carrying two

© B O B Williams Printed22/11/2023 CalcPatents Ed. 1.doc

Addometer Corp 24412/1914 Adder

24,412. Marks, E. C. R., [*Addometer Corporation*]. Dec. 21.

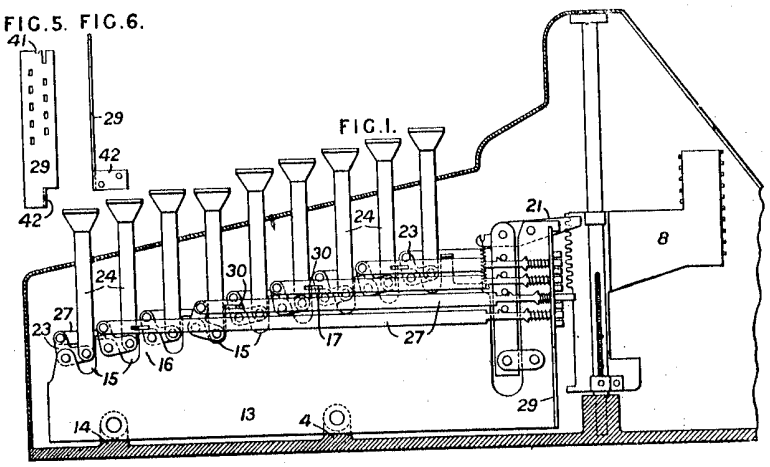

Adding - apparatus.— In multiple - bank key-set calculating-machines, each bank of keys is mounted on a removable supporting-plate 13 carried by racks 4, 14, Fig. 1. Extensions 16 of the plates have mounted alternately on opposite sides of the plate bell-crank levers 23, to which are pivoted the key-bars 24 and the stop-rods 27 slotted at 30 to be engaged by alternately - arranged projections 17. Downward movement of the keys is limited by the depth of recesses 15 formed between the extensions 16, or by the length of the slots 30. The stop-bars 27 for the type members 8 are supported by plates 29, which are secured by lugs 42, Fig. 6, riveted to the plates 13, and by hooks 21, Fig. 1, on the plates engaging notches 41, Fig. 5. The plates 13 are secured in position by bolts and spacing-sleeves.

Agnew R F 22165/1913 Slide rule for cloth

22,165. Agnew, R. F. Oct. 2.

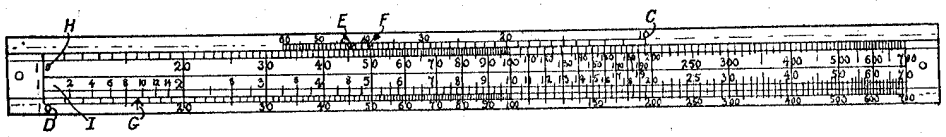

Slide - rules for cloth manufacturers and shippers are adapted to give, by a single setting of one slide, four results out of the following: grammes per square metre, grammes per lineal metre, kilos per thousand yards, lbs. weight for any given number of yards length, oz. weight per one yard, and inches width. The fixed scales are an upper one C for inches width, and a lower D for yards length. On the slide, a scale H shows weight in grammes reading kilos per thousand yards opposite a mark E, grammes per lineal metre opposite a mark F, and grammes per square metre opposite the width on scale C. A second scale I on the slide shows weight in lbs. and oz. A mark G on the fixed scale shows the weight in oz. per yard.

Albers J J O F 27368/1907 treadle operated machine

27,368. Albers, J. J. O. F. Dec. 11.

Calculating-apparatus.—In treadle-operated calculating-machines, an arrangement is provided to operate the machine, consisting of a crank 3 connected by a connecting-rod 4 to a treadle-lever 6 pivoted at 7. The crank 3 is arranged to be in an horizontal position when the machine is at rest and the spring 8 is in its normal condition. Specifications No. 12,121, A.D. 1888, No. 409, A.D. 1903, and No. 3761, A.D. 1905, are referred to.

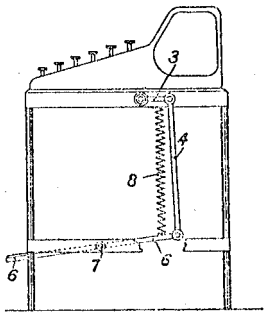

Albree E C 18776/1907 Cards for workmen's wages

18,776. Lake, W. E., [*Albree, E. C*]. Aug. 20.

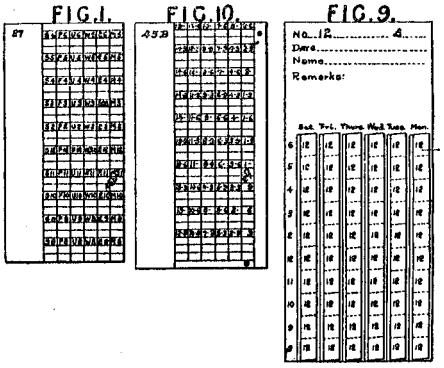

Calculating-apparatus; indicating workmen's wages.—Relates to a system for keeping account of the cost of work and of workmen's wages by means of ruled cards, the necessary calculations being performed by the correct superposition of the cards according to data inscribed thereon and guiding-marks. The system is of the nature of "double "entry," a card being employed for the work; the spaces of the card are marked to show cost, the workman's card equally divided being marked to show time at the rate of pay for the man in question. The necessary calculations are dispensed with by superposing the card on the work card and punching both through the time of completing the work. Guiding-marks enable the correct point to be brought on the under card in all positions; the calculation is normally simple addition; subtractions for deductions for absence are made with a special punch mark, and a double-sized card is employed for reckoning the cost between any two marks. In a modification, the workman's card may have coupons detachable for affixing to the work card. A workman's card, and the modified form and a work card are shown in Figs. 1, 9, and 10 respectively. In another form, the workman's card is made in the form of an envelope, in which is kept a work card with duplicate attached; the work card goes to the auditor, the duplicate being retained by the workman, while the envelope is used as making up pay by the cashier, who receives the signed duplicate card from the workman as a receipt in exchange.

Allaun C 120985 of 1917 Tab calc. The Educated Monkey

120,985. Allaun, C. Nov. 30, 1917.

FIG.I.

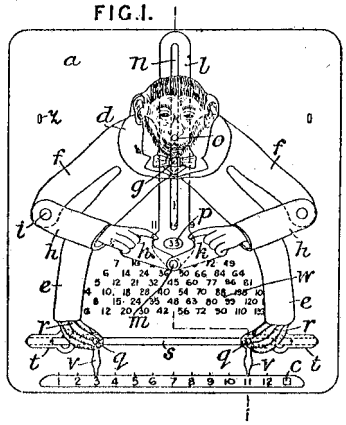

Tabular calculators.—A device for adding, subtracting, multiplying, and dividing simple integers comprises a link-work figure of an animal &c. so arranged over rows of figures consisting of the products or series of the integers that, when pointers carried by the feet of the figure are placed opposite the integers in question, the sum or quotient thereof will be indicated by the figure.

In the device shown in Fig. 1, the link-work figure comprises the body and head *d* of a monkey to which are pivoted at *g* the legs *e* and upper arms *f*. The forearms *h* are pivoted to the upper arms at *i* and to a plate *l* at *m* by means of extensions *k* of the hands. The plate *l* is slotted at *n* to engage the pin *g* and a second pin *o* carried by the body plate *d*. Pins *q* carried by the feet *r* move in a slot *s* formed in a plate *a*, to which the figure is secured by slides *t*. Pointers *v* carried by the pins *q* move over a scale of simple integers. For multiplication and division, the rows of products are arranged as shown in Fig. 1, and in operation the pointers are placed at the integers the quotient of which is required, and the result is seen at an aperture *p* in the plate *l* to which the forefingers of the figure point. In obtaining the square of a number, one pointer is placed at the number and the other at a special mark *c*. A special card for purposes of addition bearing the sums of numbers is secured over the figures *w* by paper-clips passing through slots *z* in the plate *a*.

Consul Pic from eBay

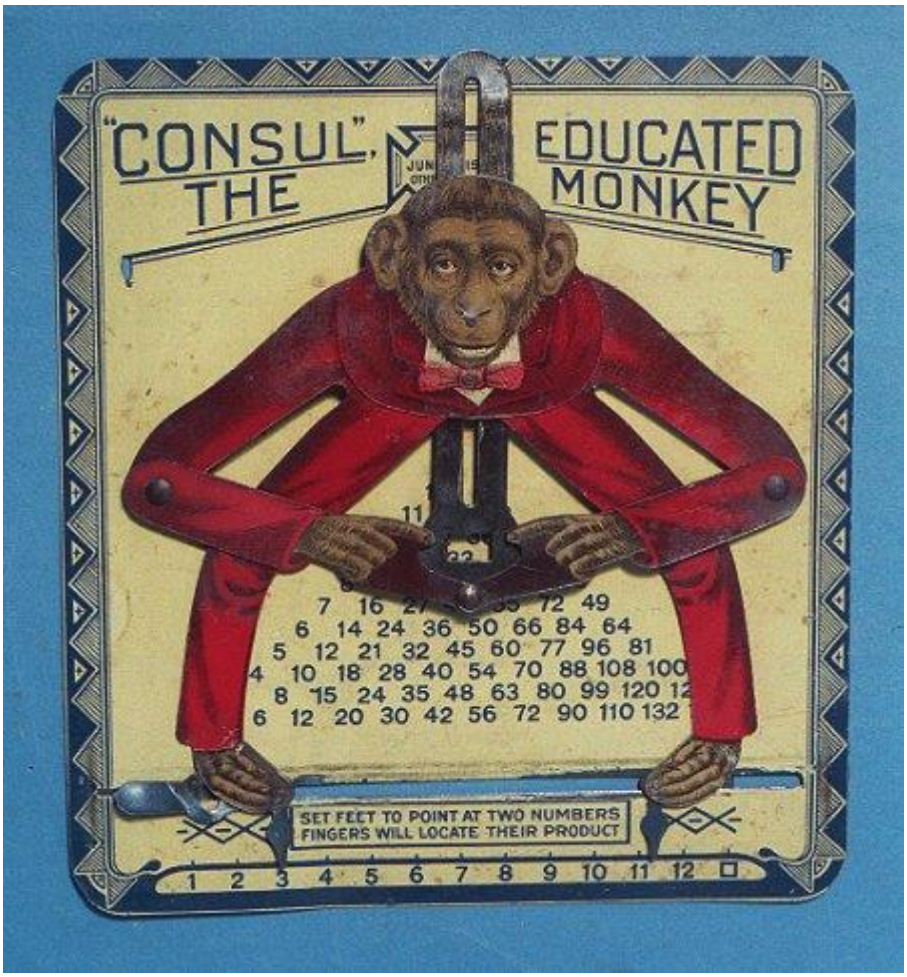

Altena de Campos L C 4114/1817 Cosmometer for longitude at sea

A.D. 1817, April 29.—N° 4114.

MARRECO, ANTONIO JOAQUIM FRIERE.—(*A communication from Luis Coctano Altena de Campos.*)—"An improved machine or "instrument for calculating and ascertaining the longitude at sea."

This instrument is called a "cosmometer," and consists of "a "cylindrical box or case made of brass," "containing some "simple mechanism," "and presenting on its upper or horizontal "face certain circles," which represent "great circles of the "heaven and of the earth, for the adjusting of the relative posi- "tion and motion of which, there are indexes, or minutes and "seconds hands, over the said horizontal face."

The case is divided into an upper and lower compartment by means of a fixed parallel plate, in the centre of which a vertical hollow journal or axle "rises to the height of the face of the "instrument." A wheel of 360 teeth, loose on the said journal, has a circular part, "which forms part of the face of the instru- "ment." The other portions of the face consist of fixed divisions of the circle and two central hands, able to rotate on concentric axes, so that they may point or be placed at any of the divisions on the dial. The short hand or "minute hand" is fixed on the hollow axis of a snail wheel, which is connected with the wheel of 360 teeth by means of a "swing lever" and "alternating" wheel. The "seconds hand" is movable on the fixed and central axis

© B O B Williams Printed22/11/2023 CalcPatents Ed. 1.doc

American Arithmometer Co 12121/1888 ASMD

12,121. Justice, P. M., [*American Arithmometer Co.*]. Aug. 22.

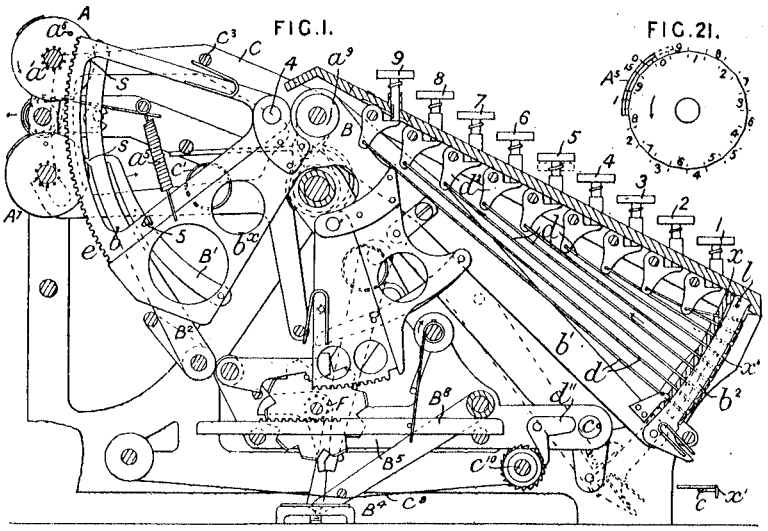

Calculating-apparatus.—The apparatus is designed to perform addition, subtraction, multiplication, and division, and calculations in decimal coinage; a large number of modifications are described, but in all these the following essential features occur. The keys are arranged to be depressed an equal distance and by an equal pressure, whatever the number they refer to, and so adjust stops by which the movement of the registering or recording device is controlled. The movement of the register or recorder is due to an independent motor, namely an independent action of the operator, or a weight or spring. The result may be displayed at a slit in the casing of the apparatus or may be printed on a paper strip, or both. The "carrying" of the tens is performed automatically by the action of springs brought into operation by the registering or recording wheels. Fig. 1 shows an example of the apparatus adapted for addition. Several rows of spring keys A^1 are provided, each row consisting of nine keys marked 1 to 9. The play of the keys and the pressure requisite to depress them are the same for all. When any key is actuated it moves a corresponding bell-crank lever d^2 and draws back the attached rod d, the end of which is bent at right-angles, to work in slots x^1 in a fixed plate c. This movement carries back the piece b^2, pivoted to the arm b^1 of the operating-lever B, and frees the stud l from a notch x in the fixed plate c. The lever B then swings on a cross-shaft a^9 under the influence of its weight, or a spring a^5, until the shoulder 2 comes in contact with the bent end of the rod d. The movement of the lever B is thus proportional to the number on the key struck, and is communicated by means of a rack e on the part b of the lever B to the register wheels by means of a pinion a^1. A similar lever B with its attachments and connections is provided for each row of keys. To allow of the automatic carrying of the tens, the part b is not rigidly connected to the part $b^\times$ of the lever B, but is pivoted to it at 4, a spring c^1 tending to separate the two parts. Normally, they are held together by a pin 5 on the lever B^1 lying, as shown, in an L-shaped slot. When the register wheel corresponding to the next lever and row of keys below has completed a revolution, a pin strikes the projection s on the lever B^2, which throwing back the lever B^1 moves the pin 5 in its slot, and allows of a slight additional movement of the part b. When a number has been added, an external handle is moved which throws the pinions a^1 out of gear with their racks by the movement of a frame C, and by the action of the cross-bar c^3 on the parts b relocks them in contact with the parts $b^\times$, and then returns all the levers B to their normal positions. In this form of the machine, a second set of register wheels A^7 is provided; where it is required to obtain independently separate sums, such for example as cash and cheques (in decimal coinage), either register may be thrown into gear as required; or several registers may be employed, mounted to revolve round an axis so that any one may be turned into gear as desired. A series of type-wheels F, corresponding to the register wheels and operated from the keys in a similar manner, are fitted to a rocking frame B^5 and over a platen B^4. The frame may be lowered by operating an external handle to record each number added, a printing-ribbon c^8 being fed forward each time, as the frame returns to its normal position, by means of the pawl d^{11} engaging a ratchet-wheel on the feed-roller c^{10}. Racks B^8 are provided to return the type-wheels to zero, which is usually required for each number added, and there are also devices for preventing more than one print of each number being taken, ensuring the correct adjustment of the type-wheels, &c. A device may also be added for printing the date. In another form of the machine the operator causes both the falling and the return of the racks, the latter movement being employed for setting the register, while the former sets the printing-discs. The print is taken between the two movements, as the printing-discs are returned to zero after each complete operation. In this case it may be arranged that the "total" displayed on the register is transferred to the printing-discs by the action of returning the former to zero. A record of the "total" as well as of the individual numbers may thus be obtained. For subtraction the machine is modified in detail, the main principles remaining, however, the same. The numbering-wheels are arranged as shown in Fig. 21, *i.e.* two series of numbers 0 to 9, called respectively the addition and subtraction series, are marked on the periphery in opposite directions. The plate A^5, through an aperture

Further text omitted

American Arithmometer Co 17126/1893 Adding

17,126. Justice, P. M., [*American Arithmometer Co.*]. Sept. 12.

Calculating-apparatus; counting-apparatus; receipts, checking and recording.—A number is added on a counter by pressing down digit keys 221, arranged in rows of nine as shown, and by subsequently operating a hand-lever 367, Fig. 14. Each key when operated causes a bell crank, pivoted beneath it on a shaft 200, to draw back a rod 270, which has its end bent through a slot *c* in a fixed plate 210, so as to become a stop in the path of a nose x^2 on a rack 610 for driving a wheel 916 of the counter. The counter is mounted in a frame C which

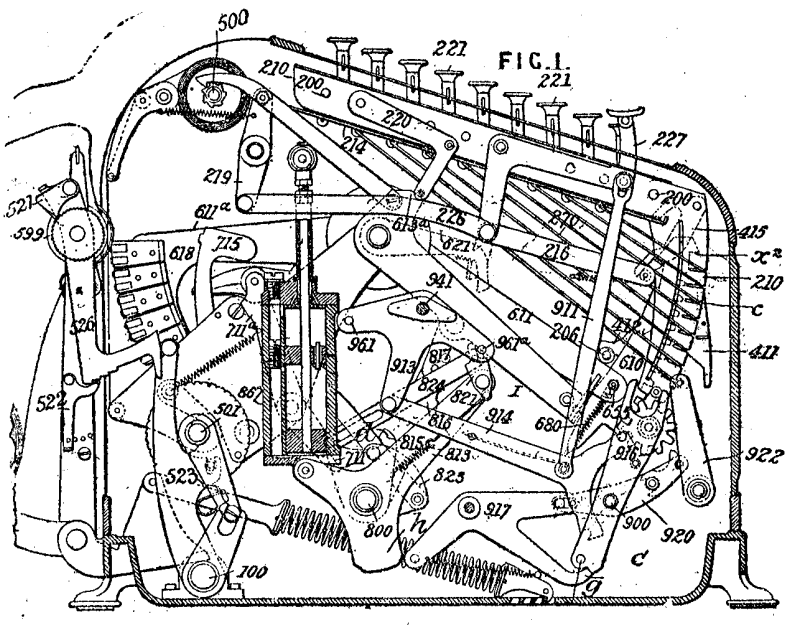

63

Text omitted.

American Arithmometer Co 12730/1897 Printing mechanism

12,730. Ashwell, A. T., [*American Arithmometer Co.*]. May 22.

Calculating - apparatus.—Relates to duplicate printing-mechanism, in which two strips or webs of paper are fed between the type and platen, and an inking-ribbon is fed between them and transversely thereto. Fig. 2 shows an arrangement applicable to a calculating-machine. The types print against the platen 13 (on the right-hand side thereof as seen in Fig. 2), which is journalled in arms B pivoted at 12 in a frame A pivoted at 9 on the frame of the calculating or other machine. Two strips of paper y, y^1 pass round the platen from rolls Y, Y^1 in arms G, and the platen is rotated to feed them by a pawl 15 on an arm operated by a cam slot in a sliding piece C pivoted to an arm 23 of a lever D. The lever D is pivoted at 20 and is provided with arms 21, 22 for feeding the ink ribbon which passes transversely between the webs y, y^1 from one spool E to the other E^1. It also has a cam arm 24 operating the arms B to move the platen and slack the paper between each impression during the feed of the interposed ribbon. The lever D is operated by an arm on the main machine. The spool E is frictionally connected to its shaft 34

FIG.2

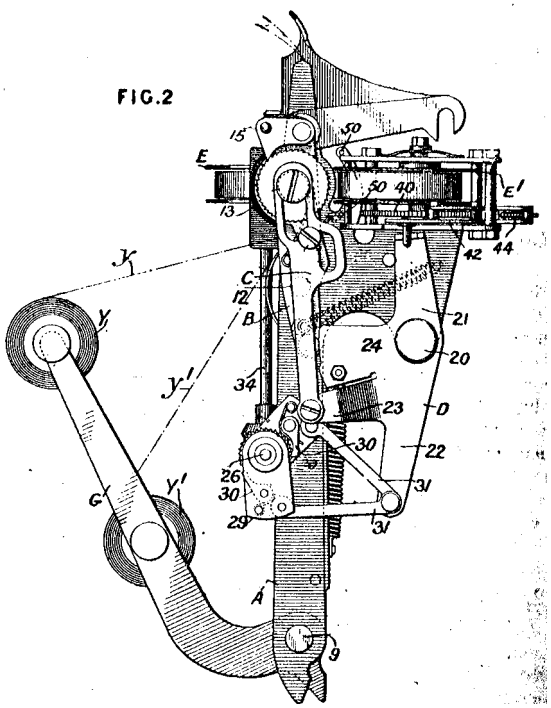

American Mechanical Cashier Co 8882/1903 Calculate change

8882. Heide, H. C., [*American Mechanical Cashier Co.*]. April 20.

Calculating-apparatus; receipts, checking and recording.—Machines for computing, indicating, recording, or otherwise facilitating money transactions, or other operations involving weights &c., but, more particularly, subtracting-machines, such as change indicating or giving machines, are provided, in combination with the number-indicating

FIG. 2.

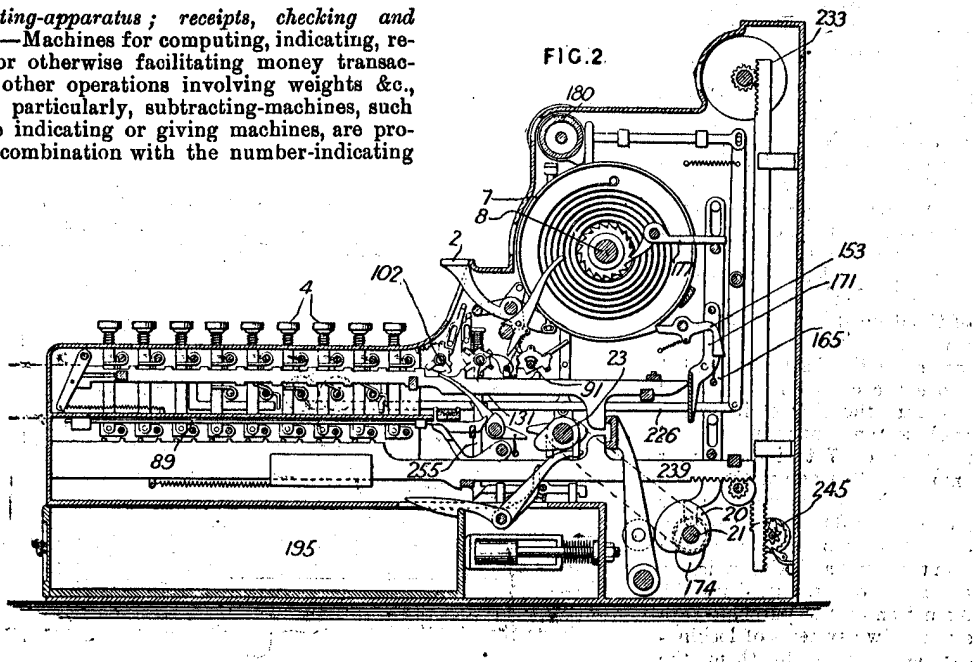

means, with means for giving results, and with connecting means between these other means and

Amsler J 2753/1855 Planimeter

2753. Bodmer, R., [*Amsler, J.*]. Dec. 6.

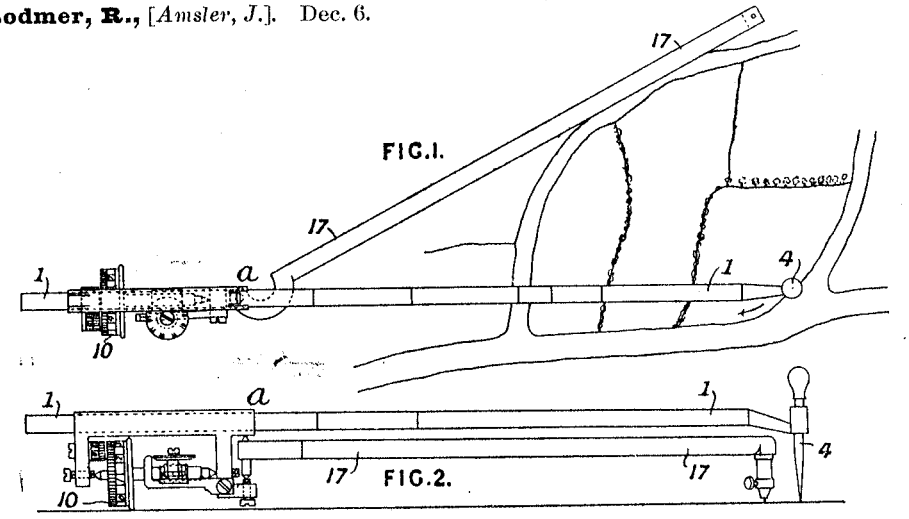

9

Planimeters.—Two arms 17, 1 are pivoted together at *a*. The arm 1 is continued backwards beyond the pivot and fitted with an integrating roller 10 mounted on an axis parallel to the arm 1. To integrate the area of a plane figure, the outer end of the arm 17 is pressed into the paper &c. and a pointer 4 on the end of the arm 1 is then carried around the boundary of the figure to be integrated. As it does so the roller 10 rolls and slips and finally indicates the area of the figure. By an adjustment of the length of the arm 1 the scale of the instrument can be changed.

See***[13]*** and***[11]***

Anderson F J 6095/1903 Long Scale slide rule

See [8]

9095. Slide-rules. ANDERSON, F. J., The Barracks, Waterford, Ireland. April 22.

FIG. 4.

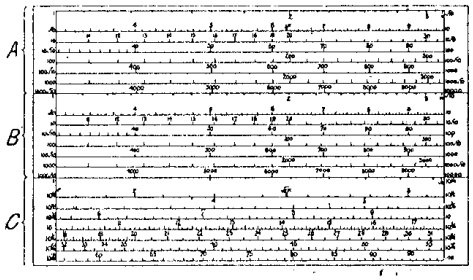

A long scale for a common logarithmic slide-rule is broken up into parts of equal length, each representing numbers between consecutive integral powers of some chosen power of 10, these parts being placed as parallel scales, one above the other, upon the two limbs or edges of the rule, the slider being similarly divided. In operating, addition or subtraction of numbers borne

FIG. 7. FIG. 8.

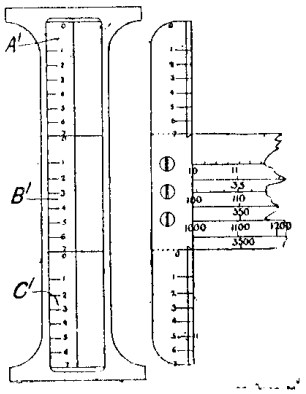

Anderson F J 9095/1903 Long Scale slide rule Full

N° 9095 A.D. 1903

Date of Application, 22nd Apr., 1903
Complete Specification Left, 30th Nov., 1903—Accepted, 4th Feb., 1904

PROVISIONAL SPECIFICATION.

"Improvements relating to Mathematical Calculating Devices."

I, FRANCIS JAMES ANDERSON, Major, R.E., Reconstruction Officer, of The Barracks, Waterford, in the County of Waterford, Ireland, do hereby declare the nature of this invention to be as follows:—

This invention has reference to mathematical calculating devices and is founded on the principle of the well-known slide-rule.

The object of the invention is threefold:

(*a*) To increase the accuracy and capacity of the ordinary decimally-divided slide rule without any corresponding increase in the length of the instrument.

(*b*) To do away with the necessity of the mental or mechanical calculation, necessary to obviate ambiguity as to the position of the decimal point, by giving each graduation on the scales a definite or absolute value that never varies.

(*c*) To render it possible, if desired to subdivide units on the slide rule into other parts than tenths (such as twelfths, or sixteenths, for example) thereby making it available for quantity surveyors, mechanical engineers, accountants, freight clerks and others to whose work it is not at present applicable. The ordinary rule is graduated on the face with 2 scales, one on each limb, which are duplicated on the slide as shewn in Figure 1 Sheet I of the accompanying drawings, where the upper limb is marked A the slide B and the lower limb C.

According to my said invention, however, each of the scales (instead of being in a continuous line) is split up into a series of equal parallel lines, the figures on each line being in geometrical progression with those of the adjacent lines immediately above or below them from which they are separated by a "common ratio" of 10 or of some root of 10.

If, for example, the geometrical ratio of $\sqrt{10}$ is selected, the upper scale would be graduated as shewn in Figure 2 Sheet I and the lower scale as shewn in Figure 3 Sheet I of the drawings, (omitting sub-divisions) the common ratio between lines in the upper being $\sqrt{10}$ and in the lower $\sqrt[4]{10}$.

The number of lines in each scale may be increased downwards as necessary according to the height to which calculations are to be carried, and upwards (if desired) to read numbers less than unity to any required degree of accuracy.

The face of the instrument may be graduated as shewn in Figure 4 Sheet II of the accompanying drawings, in which A and C are the upper and lower limbs respectively and B is the slide; and it is evident that the accuracy and capacity of the ordinary slide rule has here been increased four fold, without any increase in length of the instrument, the only limit to this increase of accuracy and capacity being the number of lines, which can be graduated on a limb or slide of a given width.

It will be noticed in the drawing that the units are subdivided to twelfths for part of the scale by way of illustration, but they may be equally well sub-divided to eighths, tenths, sixteenths or any desired fraction and the larger subdivisions (on the upper lines) may be again subdivided to forty-eighths,

© B O B Williams Printed22/11/2023 CalcPatents Ed. 1.doc

hundredths, sixteenths or any desired parts within the compass of the instrument.

The slide bears on its face the same scale as the upper limb, but an interchangeable slide may also be provided with trigonometrical and other scales as hereinafter described.

Figure 5 Sheet III of the drawings illustrates a decimally subdivided rule with a scale of natural sines and cosines, (multiplied by 100) on the face of, and Figure 6, Sheet III, a similar scale of tangents and cotangents (multiplied by 1000) on the back of the interchangeable slide.

"Gauge points" can be used at pleasure on all scales.

The instrument, which may be of wood, brass, celluloid, vulcanite, or other suitable material or materials, alone or in combination, is, with the important exceptions noted above, similar in construction to the ordinary slide-rule, having a body with upper and lower limbs between which works a slide, said limbs and slide being graduated as above described.

Over all and overlooking all scales is a traveller working in grooves on the sides of the body of the instrument and carrying a cross-hair or cross line on its glazed surface to give the alignment of the various readings. The glazed surface may be wholly or partially of magnifying glass, or may have a travelling magnifying glass attached to it to ensure finer readings and may also have auxiliary lines parallel to the cross-hair or cross line to serve as a guide to the eye in estimating unmarked divisions.

Numbered cross-lines on said traveller indicate the positions of the various graduated lines on the rule and slide. Figure 7 Sheet IV of the drawings illustrates the general arrangement, the lines of the upper and lower edges of the body of the instrument being indicated respectively by the letters A and D, and the upper and lower edges of the slide by the letters B and C respectively.

In graduating the instrument units may be numbered in different colours from those of subdivisions, as a guide to ready identification.

The slide has at each end, and in such a position as not to interfere with the lengthwise movement, a bevelled metal arm corresponding with the index-line and extending upwards and downwards to the full width of the rule.

These arms have marked on them the line numbers of the scales on the upper and lower limbs. By their help the indices can be set without the necessity of using the traveller. The drawings Figures 8 and 9 Sheet IV shew the arrangement.

The said arms may be so arranged as to be detachable, and are capable of being re-fixed on the reverse side of the slide when the latter is in use.

The method of using the instrument is simple in the extreme.

The left side of the slide which has the numbers $1 - \sqrt{10} - 10$ – and so on vertically over one another in the sketches may be called the left index, while the right side bearing the numbers $\sqrt{10}$, 10, $10\sqrt{10}$ &c, may be called the right index.

Similarly the left and right sides of both the upper and lower limb may be known as left and right indices.

The traveller is used to indicate the alignment of the scales and to show by its numbered cross-lines the line of the scale on which the answer will be found.

A few simple examples will best illustrate this.

Multiplication.

To obtain the results of multiplication:—

(*a*) Set index of slide (by means of its arm)

(*b*) To first factor on upper limb.

(*c*) Above second factor on slide.

(*d*) Read answer on the line (of the upper limb) whose number is the total of the three numbers of the lines in (*a*), (*b*) and (*c*).

(I) Thus to multiply $1^{6}/_{12} \times 2^{1}/_{12}$

On slide—(*a*) Set left index (line-No. 0): (*c*) Over $2^{1}/_{12}$ (line-No. 0)

On upper limb (*b*) To $1^{6}/_{12}$ (line-No. 0): (*d*) Read answer $3^{6}/_{48}$ (line-No. 0)

The answer is read on the 0 line of the limb because the sum of the various lines used in the operation (*a*), (*b*) and (*c*) is 0 + 0 + 0 = 0.

(II) To multiply $50^{1}/_{12} \times 6$.

On slide—(*a*) Set left index (line-No. 0): (*c*) Over 6 (line-No. 1).

On upper limb (*b*) To $50^{1}/_{12}$ (line-No. 3): (*d*) Read answer $300^{1}/_{2}$ (line-No. 4) since 0 + 3 + 1 = 4.

(III) To multiply 2 + 7

On setting the left index of slide to 2 on the upper limb we find that the 7 on slide has travelled beyond the limb and thus has no reading over it. Recourse is therefore had to the right index of slide (vertical line $\sqrt{10}$, 10, 10 $\sqrt{10}$ &c.) which is set to 2 on the limb, but 1 is added to the number of its line (calling it 1 instead of 0).

The setting is then as follows:

On slide (*a*) Set right index (line-No. 1): (*c*) Over 7 (line-No. 1).

On limb (*b*) To 2 (line-No. 0): (*d*) Read answer 14 (line-No. 2.) since 1 + 0 + 1 = 2.

Division

This operation is the exact converse of multiplication and therefore the line-number of the divisor (on slide) is called − (minus) and that of the dividend (on limb) + (plus) increasing the former by 1 in every case where recourse is taken to the right index *i.e.* calling the right index-1 (the left index being always 0).

(IV) Thus to divide 72 by 6.

On slide (*a*) Set 6 (line-No. 1): (*c*) Over left index (line-No. 0).

On limb (*b*) To 72 (line-No. 3): (*d*) Read answer 12 (line-No. 2.) since 3 − 1 = 2.

(V) To divide 24 by 8

On slide (*a*) Set 8 (line-No. 1): (*c*) Over right index (line-No.-1.).

On limb (*b*) To 24 (line-No. 2): (*d*) Read answer 3 (line-No. 0). since 2 − 1 − 1 = 0.

We can express the above rule differently thus:—

To obtain "line-number of answer on limb.

(*a*) When left index is used deduct "line-number" of divisor from "line-number of dividend.

(*b*) When right index is used, deduct "line-number". of divisor increased by 1 from "line-number" of dividend.

Squares & Square Roots.

Squares and square roots are obtained by inspection as the numbers on the slide are the squares of the corresponding numbers (on the same lines) on the lower limb, while conversely the numbers on the lower limb are the square roots of those in a corresponding position on the slide. By setting the slide immediately over the lower limb there is thus formed a table of squares and square roots.

Cubes

(VI) Cube 4.

On slide—(*a*) Set left index (line No 0): (*c*) Over 4 on slide (line-No. 1).

On lower limb (*b*) To 4 (line-No. 2): (*d*) Read answer on upper limb 64 (line-No. 3) since 0 + 2 + 1 = 3.

The rule is:

If left index be used the sum of the line-numbers in (*a*), (*b*) and (*c*) gives the number of the line in which the answer is to be read, but if the right index be used it must be called + 1 as in Example VII.

(VII) Cube 7.

On slide—(*a*) Set right index (line-No. + 1): (*c*) Over 7 on slide (line-No. 1)

On lower limb (*b*) To 7 (line-No. 3): (*d*) Read answer 343 (line-No. 5) since 1 + 1 + 3 = 5.

Cube Roots

In extracting cube roots the rule is to move the slide to the right or left (as may be required) until the same number on the slide appears under the number, (whose cube root is to be extracted) on the upper limb, as appears on the lower limb under the index of the slide.

If the left index be used the line-number of the upper limb, less the line-number of the slide, gives the line-number of the lower limb where the answer will be found, but if the right index be used 1 must be deducted from the resulting line-number.

(VIII) Thus if the cube root of 27 is required.

The slide is moved to the left until the same number (in this case 3) appears on the slide under 27 on the upper limb, and on the lower limb under the right hand index of the slide. The setting stands thus:

On upper limb (*a*) To 27 (line No. 2).

On slide { (*b*) Set 3 (line-No. 0)
(*c*) Under right index (line-No.—1).

On lower limb (*d*) Read answer 3 (line-No. 1) since 2 − 0 − 1 = 1.

(IX) To find the cube root of 1331.

On upper limb (*a*) To 1331 (line-No. 6).

On slide { (*b*) Set 11 (line-No. 2)
(*c*) Left index (line-No. 0)

On lower limb (*d*) Read answer 11 (Line-No. 4).

Areas of Circles.

Set π on the slide to either the right or left index of the upper limb, as may be necessary, calling the "line number" 0 if to the left index and + 1 if to the right index.

Then above the radius on the lower limb read the area of the circle on the slide in the line indicated by the sum of the line-numbers.

Thus

(X) Radius 49 feet. Find area.

On slide (*a*) Set π (line-No. 0)

On upper limb (*b*) To right index (line-No. 1)

On lower limb (*c*) Over 49 (line-No. 6).

On slide (*d*) Read answer, area 7543 sq. ft. (line-No. 7) since 0 + 1 + 6 = 7.

(XI) Radius 31.65 feet. Find area.

On slide (*a*) Set π (line-No. 0).

On upper limb (*b*) To left index (line-No. 0),

On lower limb (*c*) Over 31.65 (line-No. 6).

On slide (*d*) Read answer area 3147 (line-No. 6) since 0 + 0 + 6 = 6.

Note. By setting π on slide to the indices of the upper (instead of the lower) limb the necessity for using the traveller to give the alignment is avoided. Owing to the proximity of π to the right index it will rarely be necessary to set the slide to the left index of the upper limb.

The value of the line numbers to be assigned to the indices for the various operations may therefore be expressed thus:

Left index. + 0 in all operations.

Right index. + 1 in all operations involving multiplication including therefore cubing, and areas of circles and

− 1 in all operations involding division including cube roots.

TRIGONOMETRICAL FUNCTIONS.

The interchangeable slide may have any useful scales on its face or back as illustrated in Figures 5 and 6 (Sheet III, where the face bears a scale of sines ranging from 35¹ to 90° and of cosines ranging from 0° to 89° 25¹.

The corresponding figures (on the same lines) on the scale of the lower limb give the values of the natural sines and cosines (multiplied by 100) while the scale on the upper limb similarly gives the values of their squares (multiplied by 10,000).

The back of the slide (as shewn in Figure 6 Sheet III) has a similar scale of tangents from 4¹ to 84° 17¹ and of contangents ranging from 43¹ to 89° 56¹. Above them on the upper limb can be read their values (multiplied by 1000). This slide has no indices.

The instrument may be of any convenient size according to the purpose for which it is required to be used.

Dated this 22nd day of April 1903.

HASELTINE, LAKE & Co.,
45 Southampton Buildings, London, W.C.
Agents for the Applicant.

COMPLETE SPECIFICATION.

"Improvements relating to Mathematical Calculating Devices."

I, FRANCIS JAMES ANDERSON, Major, R.E., Reconstruction Officer, of The Barracks, Waterford, in the County of Waterford, Ireland, do hereby declare the nature of this invention and in what manner the same is to be performed, to be particularly described and ascertained in and by the following statement:—

This invention has reference to mathematical calculating devices and is founded on the principle of the well-known slide-rule.

The object of the invention is threefold;

(*a*) To increase the accuracy and capacity of the ordinary decimally-divided slide rule without any corresponding increase in the length of the instrument.

(*b*) To do away with the necessity of the mental or mechanical calculation heretofore necessary to obviate ambiguity as to the position of the decimal point, by giving each graduation on the scales a definite or absolute value that never varies.

(*c*) To render it possible, if desired to subdivide units on the slide rule into other parts than tenths, such as twelfths or sixteenths, for example, thereby making it available for quantity surveyors, mechanical engineers, accountants, freight clerks and others to whose work it is not at present applicable. The ordinary rule is graduated on the face with two scales, one on each limb, which are duplicated on the slide.

According to my said invention, however, each of the scales (instead of being in a continuous line) is split up into a series of equal parallel lines, the figures on each line being in geometrical progression with those of the adjacent lines immediately above or below them from which they are separated by a "common ratio" of 10 or of some root of 10.

The number of lines in each scale may be increased in one direction as

necessary according to the height to which calculations are to be carried, and in the other direction (if desired) to read numbers less than unity to any required degree of accuracy.

The apparatus embodying the features of my invention comprises a slide rule graduated as above indicated and provided with a slide having transverse end-pieces or lateral extensions that extend across the face of the rule, and with a traveller carrying a hair or other line that extends across all the scales to give the alignment of the various readings, The said lateral extensions of the slide, and the traveller, are adapted to distinguish, by any appropriate means such as markings, the various lines or similar parts of the scales.

In order that my invention may be clearly understood and readily carried into effect I will now describe the same more fully with reference to the drawings accompanying my Provisional Specification, in which:—

Figure 1 illustrates the manner in which the scales have been distributed on slide rules of the type heretofore ordinarily employed.

Figures 2 and 3 illustrate in a simple form examples of the manner in which I propose to distribute the scales on the limbs of the rule, Figure 2 representing the upper, and Figure 3 lower, limb.

Figures 4 and 5 give two more complete examples of scales distributed in accordance with my present practice; Figure 5 also exemplifying a somewhat modified form of the apparatus.

Figure 6 shows separately another scale useful for the slide.

Figure 7 is a view showing the traveller by itself.

Figures 8 and 9 are views, partly broken away, showing separately the opposite ends of the slide.

A represents the body of the rule, B the slide and C the traveller.

The ordinary slide rule has each of its limbs graduated with a scale (Figure 1) which is comprised in a single or continuous line and which is repeated on the slide, and it has for its graduations values that are only relative.

The scales shown in Figures 2 and 3 however are each split up into five portions or lines between which are common ratios. If, for example, the geometrical ratio of $\sqrt{10}$ is selected, the upper scale would be graduated as shewn in Figure 2 and the lower scale as shown in Figure 3 (omitting sub-divisions), the common ratio between lines in the upper being $\sqrt{10}$ and in the lower $\sqrt[4]{10}$

The face of the instrument may be graduated as shewn in Figure 4, in which A and C are the upper and lower limbs respectively and B is the slide; and it is evident that the accuracy and capacity of the ordinary slide rule has here been increased four fold, without any increase in the length of the instrument, practically the only limit to this increase of accuracy and capacity being the number of lines which can be graduated on a limb or slide of a given width.

It will be noticed in the example shown in the drawing that the units are subdivided to twelfths for part of the scale by way of illustration, but they may be equally well subdivided to eighths, tenths, sixteenths or any desired fraction, and the larger subdivisions (on the upper lines) may be again subdivided to forty-eighths, hundredths, sixteenths or any desired parts within the compass of the instrument.

In the above example the slide bears on its face the same scale as the upper limb, but an interchangeable slide may be provided, having trigonometrical and other scales as hereinafter described.

Figure 5 of the drawings illustrates a decimally subdivided rule with a scale of natural sines and cosines, (multiplied by 100) on the face of, and Figure 6 a similar scale of tangents and cotangents (multiplied by 1000) on the back of the interchangeable slide.

"Gauge points" can be used at pleasure on all scales.

The instrument may be of any convenient size according to the purpose for

which it is required, and also of any appropriate material such as wood, brass, celluloid, vulcanite, or other suitable material or materials, alone or in combination; and it is, with the important exceptions noted above, similar in construction to the ordinary slide-rule, having a body with upper and lower limbs between which works a slide, said limbs and slide being graduated as above described.

Over all and overlooking all scales is the traveller working in grooves on the sides of the body of the instrument and having a glazed surface provided with the aforesaid cross-bar or cross line. Said glazed surface may be wholly or partially of magnifying glass, or may have a travelling magnifying glass attached to it to ensure finer readings and may also have auxiliary lines parallel to the cross hair or cross line to serve as a guide to the eye in estimating unmarked divisions.

Numbered cross-lines on the traveller indicate the positions of the various graduated lines on the rule and slide. Figure 7 illustrates the general arrangement, the lines of the upper and lower edges of the body of the instrument being indicated respectively by the letters A and D, and the upper and lower edges of the slide by the letters B and C respectively.

In graduating the instrument units may be numbered in different colours from those of subdivisions, as a guide to ready identification.

The slide has at each end, and in such a position as not to interfere with the lengthwise movement, a lateral extension comprising a bevelled metal arm corresponding with the index-line and extending upwards and downwards to the full width of the rule.

These arms have marked on them the line numbers of the scales on the upper and lower limbs. By their help the indices can be set without the necessity of using the traveller. Figures 8 and 9 shew the arrangement.

The said arms may be so arranged as to be detachable, and are capable of being re-fixed on the reverse side of the slide when the latter is in use.

The method of using the instrument is simple in the extreme.

The left side of the slide, which has the numbers 1, $\sqrt{10}$, 10 . . . and so on vertically over one another in the sketches, may be called the left index, while the right side bearing the numbers $\sqrt{10}$, 10, 10 $\sqrt{10}$ may be called the right index.

Similarly the left and right sides of both the upper and lower limb may be known as left and right indices.

The traveller is used to indicate the alignment of the scales and to show by its numbered cross-lines the line of the scale on which the answer will be found.

A few simple examples will best illustrate this.

Multiplication.

To obtain the results of multiplication:—

(*a*) Set the index of slide (by means of its arm)

(*b*) To first factor on upper limb.

(*c*) Above second factor on slide.

(*d*) Read answer on the line (of the upper limb) whose number is the total of the three numbers of the lines in (*a*) (*b*) and (*c*).

(I) Thus to multiply $1^{6}/_{12}$ by $2^{1}/_{12}$:

On slide (*a*) Set left index (line No. 0): (*c*) Over $2^{1}/_{12}$ (line No. 0)

On upper limb (*b*) To $1^{6}/_{12}$ (line No. 0): (*d*) Read answer $3^{6}/_{48}$ (line No. 0)

The answer is read on the 0 line of the limb because the sum of the various lines used in the operation (*a*) (*b*) and (*c*) is 0 + 0 + 0 = 0.

(II) To multiply $50^{1}/_{12}$ by 6.

On slide (*a*) Set left index (line No. 0): (*c*) Over 6 (line No. 1).

On upper limb (*b*) To $50^{1}/_{12}$ (line No. 3): (*d*) Read answer $300^{1}/_{2}$ (line No. 4) 0 + 3 + 1 = 4.

© B O B Williams Printed22/11/2023 CalcPatents Ed. 1.doc

(III) To multiply 2 by 7.

On setting the left index of slide to 2 on the upper limb it is found that the 7 on slide has travelled beyond the limb and thus has no reading over it. Recourse is therefore had to the right index of slide (vertical line $\sqrt{10}$, 10, 10 $\sqrt{10}$ &c.) which is set to 2 on the limb, but 1 is added to the number of its line (calling it 1 instead of 0).

The setting is then as follows:

On slide (*a*) Set right index (line No. 1): (*c*) Over 7 (line No. 1).

On limb (*b*) To 2 (line No. 0): (*d*) Read answer 14 (line No. 2) since 1 + 0 + 1 = 2

Division.

This operation is the exact converse of multiplication and therefore the line-number of the divisor (on slide) is called – (minus) and that of the dividend (on limb) + (plus), increasing the former by 1 in every case where recourse is taken to the right index, *i.e.* calling the right index – 1 (the left index being always 0).

(IV) Thus, to divide 72 by 6.

On slide (*a*) Set 6 (line No. 1): (*c*) Over left index (line No. 0).

On limb (*b*) To 72 (line No. 3): (*d*) Read answer 12 (line No. 2.) since 3 – 1 = 2.

(V) To divide 24 by 8.

On slide (*a*) Set 8 (line No. 1): (*c*) Over right index (line No. 1).

On limb (*b*) To 24 (line No. 2): (*d*) Read answer 3 (line No. 0) since 2 – 1 – 1 = 0.

The above rule can be expressed differently thus:—

To obtain "line-number" of answer on limb.

(*a*) When left index is used deduct "line-number" of divisor from "line-number" of dividend.

(*b*) When right index is used, deduct "line-number" of divisor increased by 1 from "line-number" of dividend.

Squares & Square Roots.

Squares and square roots are obtained by inspection, as the numbers on the slide are the squares of the corresponding numbers (on the same lines) on the lower limb, while conversely the numbers on the lower limb are the square roots of those in a corresponding position on the slide. By setting the slide immediately over the lower limb there is thus formed a table of squares and square roots.

Cubes.

(VI) Cube 4.

On slide: (*a*) Set left index (line No. 0): (*c*) Over 4 on slide (line No. 1).

On lower limb (*b*) To 4 (line No. 2): (*d*) Read answer on upper limb 64 (line No. 3), since 0 + 2 + 1 = 3.

The rule is:

If left index be used the sum of the line-numbers in (*a*), (*b*) and (*c*) gives the number of the line in which the answer is to be read, but if the right index be used it must be called + 1, as in Example VII.

(VII) Cube 7.

On slide: (*a*) Set right index (line No. + 1): (*c*) Over 7 on slide (line No. 1).

On lower limb (*b*) To 7 (line No. 3): (*d*) Read answer 343 (line No. 5) since 1 + 1 + 3 = 5.

Cube Roots.

In extracting cube roots the rule is to move the slide to the right or left (as may be required) until the same number on the slide appears under the

© B O B Williams Printed22/11/2023 CalcPatents Ed. 1.doc

number whose cube root is to be extracted on the upper limb, as appears on the lower limb under the index of the slide.

If the left index be used the line-number of the upper limb, less the line-number of the slide, gives the line-number of the lower limb where the answer will be found, but if the right index be used 1 must be deducted from the resulting line-number.

(VIII) Thus if the cube root of 27 is required.

The slide is moved to the left until the same number (in this case 3) appears on the slide under 27 on the upper limb and on the lower limb under the right index of the slide. The setting stands thus:

On upper limb (*a*) To 27 (line No. 2).

On slide { (*b*) Set 3 (line No. 0)
(*c*) Under right index (line No. 1)

On lower limb (*d*) Read answer 3 (line No. 1) since 2 − 0 − 1 = 1.

(IX) To find the cube root of 1331.

On upper limb (*a*) To 1331 (line No. 6).

On slide { (*b*) Set 11 (line No. 2)
(*c*) Left index (line No. 0)

On lower limb (*d*) Read answer 11 (Line No. 4).

Areas of Circles.

Set π on the slide to either the right or left index of the upper limb, as may be necessary, calling the "line number" 0 if to the left index and + 1 if to the right index.

Then above the radius on the lower limb read the area of the circle on the slide in the line indicated by the sum of the line-numbers.

Thus:

(X) Radius 49 feet. Find area.

On slide (*a*) Set π (line No. 0).

On upper limb (*b*) To right index (line No. 1)

On lower limb (*c*) Over 49 (line No. 6),

On slide (*d*) Read answer, area 7543 sq. ft. (line No. 7) since 0 + 1 + 6 = 7.

(XI) Radius 31.65 feet. Find area.

On slide (*a*) Set π (line No. 0).

On upper limb (*b*) To left index (line No. 0),

On lower limb (*c*) Over 31.65 (line No. 6),

On slide (*d*) Read answer area 3147 (line No. 6), since 0 + 0 + 6 = 6.

Note. By setting π on slide to the indices of the upper (instead of the lower) limb the necessity for using the traveller to give the alignment is avoided. Owing to the proximity of π to the right index it will rarely be necessary to set the slide to the left index of the upper limb.

The value of the line numbers to be assigned to the indices for the various operations may therefore be expressed thus:

Left index: + 0 in all operations.

Right index: + 1 in all operations involving multiplication, including therefore cubing, and areas of circles and

= 1 in all operations involving division including cube roots.

Trigonometrical Functions.

The interchangeable slide may have any useful scales on its face or back as illustrated in Figures 5 and 6, where the face bears a scale of sines ranging from 35′ to 90° and of cosines ranging from 0° to 89° 25′.

The corresponding figures (on the same lines) on the scale of the lower limb give the values of the natural sines and cosines (multiplied by 100) while the

© B O B Williams Printed22/11/2023 CalcPatents Ed. 1.doc

scale on the upper limb similarly gives the values of their squares (multiplied by 10,000).

The back of the slide (as shewn in Figure 6) has a similar scale of tangents from 4′ to 84° 17′ and of contagents ranging from 43′ to 89° 56′.

Above them on the upper limb can be read their values (multiplied by 1000). This slide has no indices.

Having now particularly described and ascertained the nature of my said invention and in what manner the same is to be performed, I declare that what I claim is:—

1. A slide rule graduated as above described and having the slide furnished with lateral extensions as and for the purposes set forth.

2. The improved slide rule having its parts constructed and arranged substantially as herein described.

Dated this 30th day of November 1903.

HASELTINE, LAKE & Co.
45 Southampton Buildings, London, W.C.
Agents for the Applicant.

Redhill: Printed for His Majesty's Stationery Office, by Love & Malcomson, Ltd.—1904.

ERRATA

SPECIFICATION No. 9095 A.D. 1903.

Page 3, line 12, *for* the sign " + " *read* " × "

.. 9, ,, 44, *for* the sign " = " *read* " − "

PATENT OFFICE,
18*th Mar.*, 1904.

© B O B Williams Printed22/11/2023 CalcPatents Ed. 1.doc

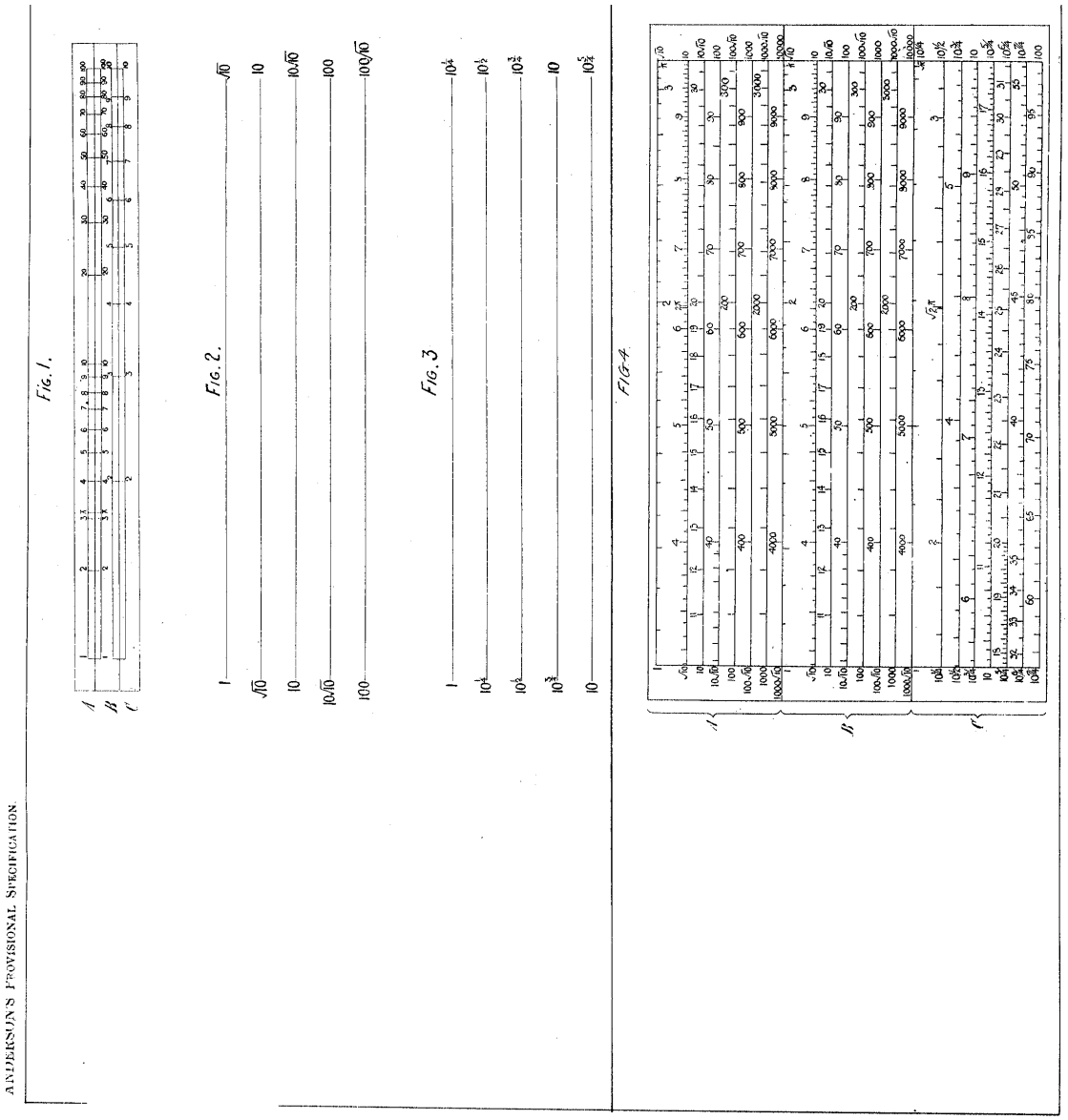

© B O B Williams Printed22/11/2023 CalcPatents Ed. 1.doc

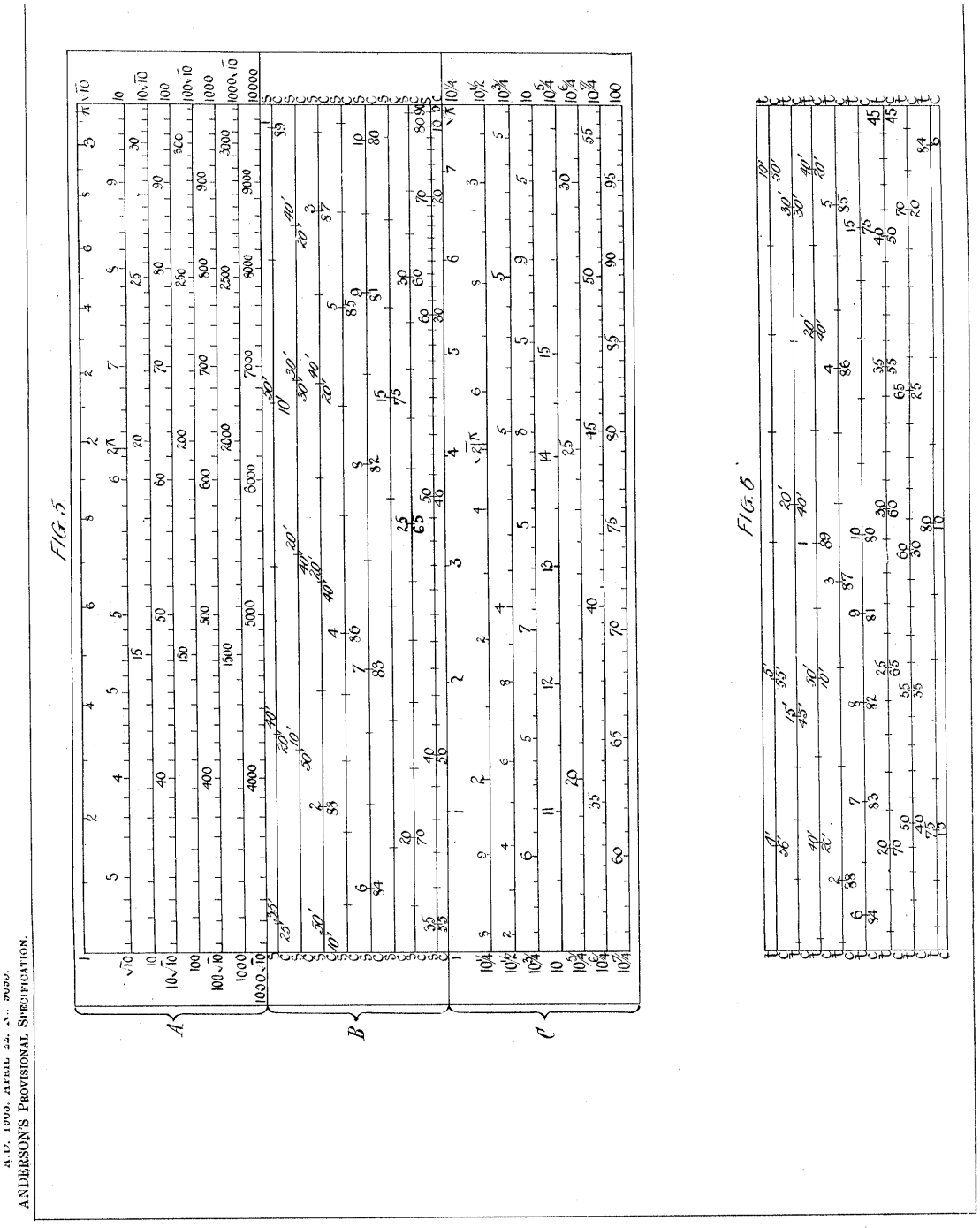

© B O B Williams Printed22/11/2023 CalcPatents Ed. 1.doc

A.D. 1903. APRIL 22. N.º 9095.
ANDERSON'S PROVISIONAL SPECIFICATION.

(4 SHEETS)
SHEET 4.

Fig. 7.

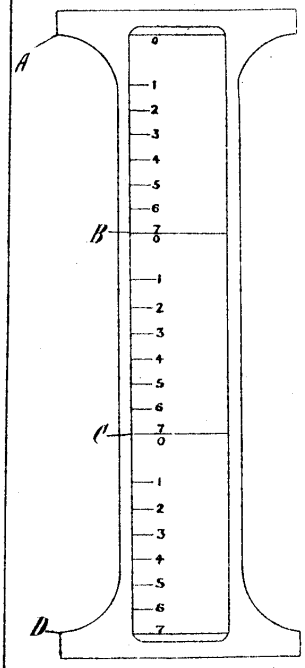

Fig. 8.

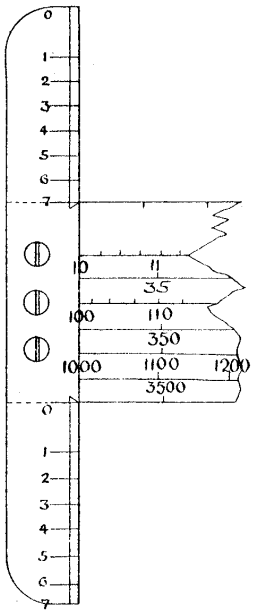

Fig. 9.

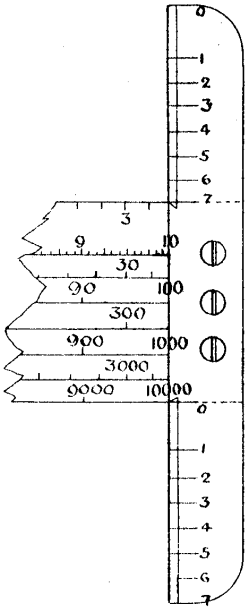

[This Drawing is a reproduction of the Original on a reduced scale.]

Anderson F J 22762/1903 Spiral slide rule

22,762. Anderson, F. J. Oct. 21.

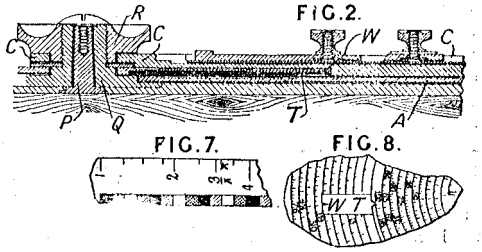

Slide rules.—In a slide rule of the dial type, logarithms are marked off in units of angle on a spiral curve, whereby the diminishing first-difference of the logarithm is balanced by the increase in the linear scale on which setting takes place. Graduated radial arms carry scales indicating t e points at which results are to be looked for. The inner and outer discs, Fig. 1, can be relatively rotated, and may have their circumferences divided into corresponding coloured sections I, J, K, L. The index arm A is attached to a barrel-piece Q, Fig. 2, clamped on the central spindle P, by the screw R, the traveller arm C being also centrally pivoted and carrying a scale E which can slide radially. Pointers D, B can be clamped to this scale, and both have reading edges for the edge scale of the arm C, while B has also an edge reading on the slide. The fixed scales on the two arms are coloured according to the quadrants. A supplementary arm T, sliding telescopically under the central disc, can be drawn out at the 100 graduation by means of a stud W, and is used in three factor multiplications and divisions in order to clamp the index arm one factor in front or behind it, before setting for the other two factors in the usual manner. Constants may be marked on the scales and the units and subdivisions distinguished by different colourings.

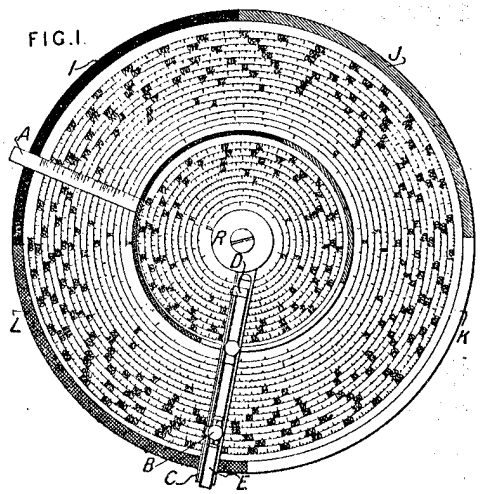

Angus G H 4228/1888 Abacus

4228. Angus, G. H. March 19.

Calculating-apparatus.—Relates to apparatus for facilitating arithmetical calculations, chiefly designed for use in teaching arithmetic. An abacus is provided with shutters or means for covering some or all of the balls or discs and indicating the number exposed to view. The Figures show one arrangement. A number of discs, preferably in two colours, are painted on strips of wood *b* secured at their ends in a frame *a*. Each strip may be wholly or partly covered by a shutter *c*, which is a band running round rollers *d*, *d* and with its ends attached to a handle or clip c^1 sliding on the strip, one end being in front of the strip and the other behind. The band also carries a series of figures arranged to appear through an aperture *f* in the frame and indicate the number of discs exposed. The apparatus may be used for addition by printing the number of black discs required to make up 10 upon the edge of the frame opposite each strip and manipulating the shutters. In a similar manner subtraction and multiplication may be shown.

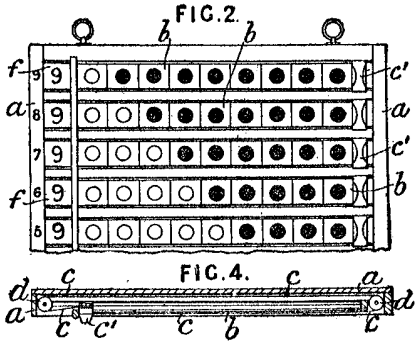

Angus T C 135646 of 1918 Plane trig calc.

135,646. Angus, T. C. Dec. 10, 1918.

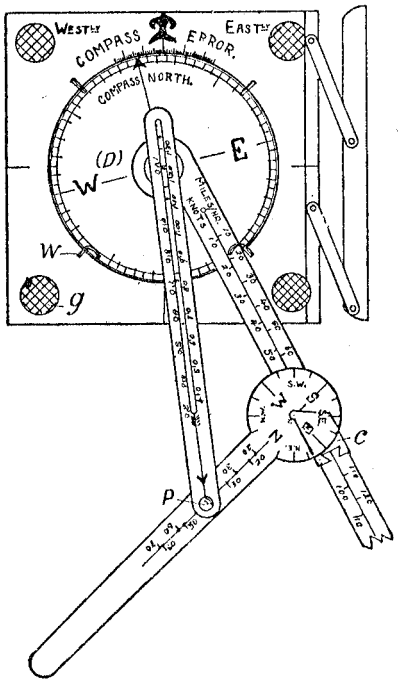

Plane-trigonometry calculators. — Relates to a course-setting or calculating instrument for aerial navigation for working out the usual problems involving air speed, ground speed, wind, magnetic and true bearings. The instrument is directly applicable to the chart used and is of transparent or translucent material, and comprises a square base-plate with rough disks *g* of glass-paper or the like to prevent slipping and carrying a rotatable divided bearing-disk D between guide-pins *w* engaging a groove in the edge of the disk, two pins being bent over to hold the disk in set position. A scale on the base-plate allows the centre dial to be set for magnetic variation. On a central pivot are mounted a ground-speed and an air-speed arm, the latter being slotted to engage the pivot. A slider *c* on the ground-speed arm carries on a pivot on the radial edge of the arm, a wind-arm with a graduated circle for setting wind direction by bringing the requisite reading to a meridian on the chart. Holes are made at the divisions on the wind-arm to take a pin P on the air-arm. A parallel-rule attachment on the side of the base-plate enables the base to be oriented after the centre point has been brought over the point of departure.

Appleton L 1103/1868 Apparatus for calculating interest to the ¼ d

1103. Appleton, L. April 1. [*Provisional protection only.*]

FIG. 1.

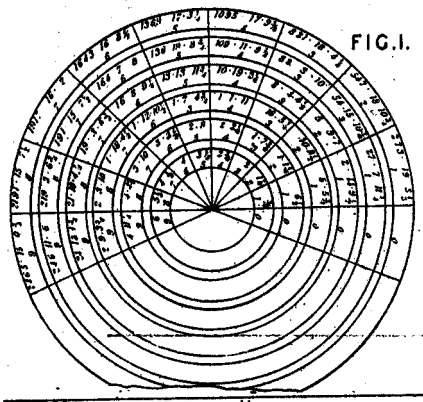

FIG. 2.

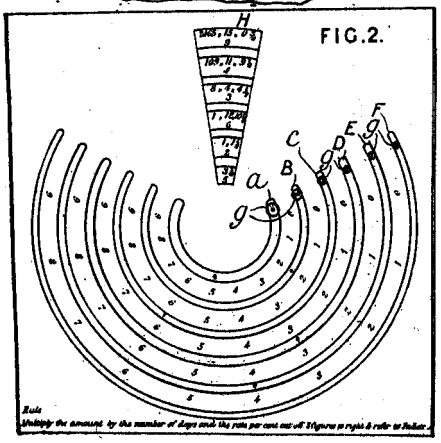

Calculating-apparatus.—Relates to apparatus for calculating interest. A series of graduated rings of metal, cardboard, or other material may be rotated independently on a common centre. The narrow rings, Fig. 1, graduated as shown, are moved round to their required positions by knobs *g* running in the graduated slots A, B, C, D, E, and F, in the front plate, Fig. 2, the figures being read through the opening H. The mode of procedure is as follows:—Multiply the capital by the number of days and the rate per cent., cut off two figures to the right of the product, and refer to the index for the remainder of the product. For example, if the amount be £2,324 for 10 days at 3 per cent., the amount after being multiplied by 10 and again by 3 will be £69,720, and after cutting off the two figures to the right 697 remains. Upon turning the three knobs *g* nearest the centre respectively to 6, 9, and 7, the amounts £1 12s. 10½d, 4s. 11½d. and 4½d. will be shown, which amounts added together give the required interest, viz., £1 18s. 2¼d.

Appleyard R 136179 of 1916 Spiral slide rule for heights

136,179. Appleyard, R. Nov. 1, 1916.

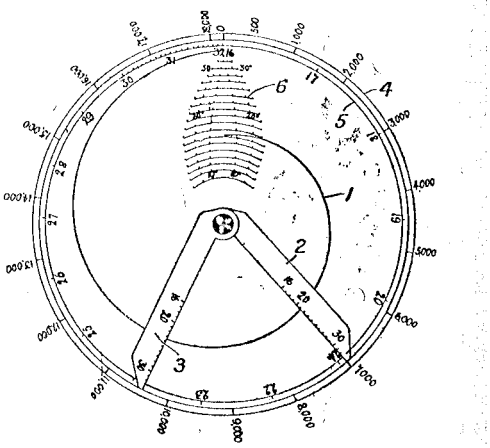

Slide-rules. — Consists in apparatus for determining the correct height of one station above another, and comprising mainly a height scale, a barometric measure scale, and means for referring to a datum point on the height scale the difference between the two readings on the pressure scale. As shown, the pressure scale is a logarithmic spiral 1 used in conjunction with radial arms 2, 3 graduated in pressures, which are set on the spiral at the two pressure readings respectively, and then moved together until one arm is on the datum point of a height scale 4, whereupon the reading of the other arm gives the desired height. Instead of a logarithmic spiral 1, a pressure scale 5 projected from it may be provided, in which case the radial arms may be dispensed with. Additional scales such as 6 may be provided for correcting for temperature and lag. This apparatus may be combined with the dial of an aneroid. One of the Provisional Specifications also mentions the use of straight scales instead of a circular one.

Appleyard R 136180 of 1917 Plane trig calc for ranging

136,180. Appleyard, R. Jan. 13, 1917.

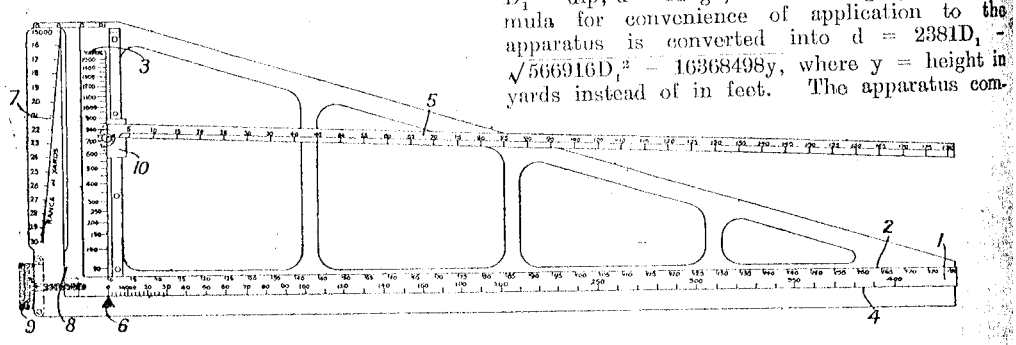

Plane-trigonometry calculators.—Consists of apparatus for calculating the horizontal range when the height and dip are known and when the curvature of the earth and refraction of light by the atmosphere have to be taken into account by the formula $D_1 = 0{,}00021\ d + 1145{,}76\ \frac{x}{d}$, where D_1 = dip, d = range, and x = height, which formula for convenience of application to the apparatus is converted into $d = 2381D_1 - \sqrt{5669161D_1^2 - 16368498y}$, where y = height in yards instead of in feet. The apparatus comprises a slide 1 with a scale 4 graduated in range d and a scale 2 graduated in terms of $4045.8\sqrt{y}$, a fixed scale 3 graduated in terms of $2381D_1$, and a scale 5 graduated like the scale 2 and pivoted to a carrier 10 sliding along the height scale. The carrier is first adjusted to the graduation corres-

Appleyard R 136181of 1917 Slide rule for air speed

136,181. Appleyard, R. Oct. 31, 1917.

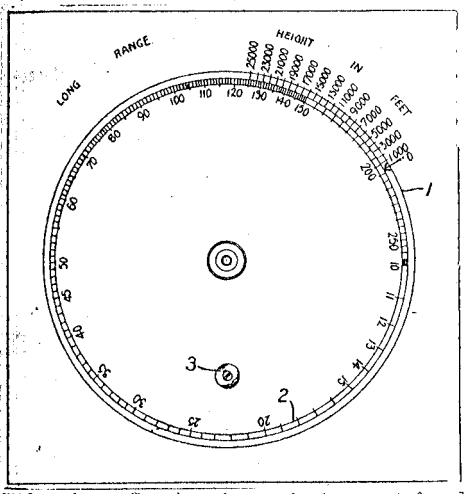

Slide-rules.—Consists in an instrument for determining true air-speed of aircraft from the reading of an air-speed indicator, comprising a scale such as 2 for air-speed having relative moment to a scale such as 1 for height or barometric pressure. A button 3 may be provided for handling the scale 1. A temperature scale may be added to correct the datum point of the scale 2, travelled by the aircraft. These scales may be combined with the air-speed indicator, and arranged concentric with the dial of the indicator.

Appleyard R 136182 of 1917 Log calc.

136,182. Appleyard, R. Nov. 15, 1917.

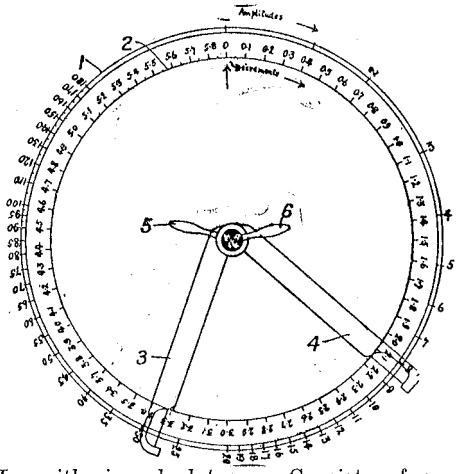

Logarithmic calculators.—Consists of an apparatus for calculating logarithmic decrements comprising a circular scale 1 of amplitudes, a concentric scale 2 of logarithmic decrements, and two radial index arms 3, 4 capable of moving independently or together as desired. These arms are set respectively to successive amplitudes of a damped vibration, then moved together until one of them is on the datum point of the logarithmic decrement scale, and the decrement is given by the reading of the other arm on the same scale. Handles 5, 6 may be provided for the radial arms.

© B O B V

Appleyard R 136183 of 1918 Plane trig calc. for torpedos

136,183. Appleyard, R. Jan. 25, 1918.

FIG. 1

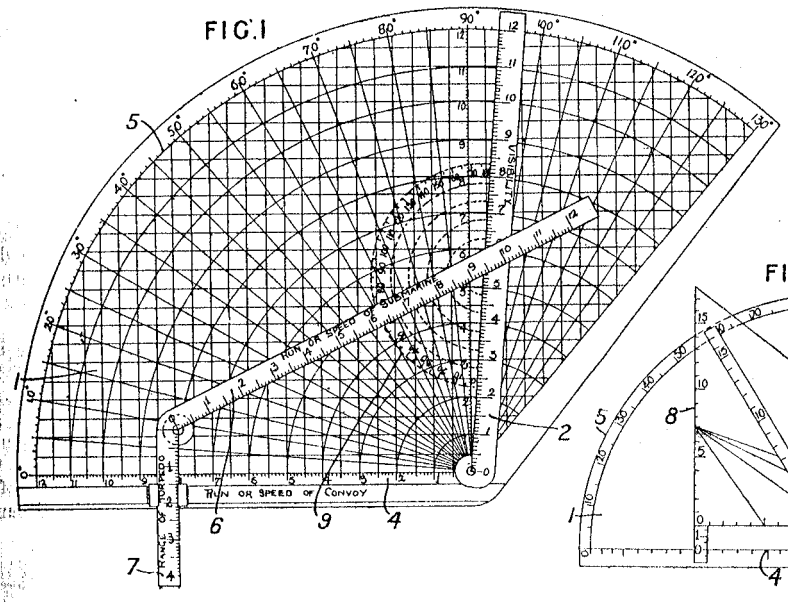

FIG. 2.

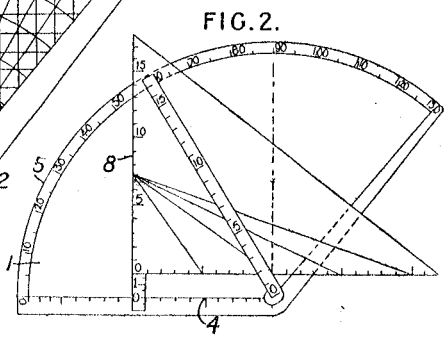

Plane-trigonometry calculators.—Consists of an apparatus for determining the limiting angle of approach of a submarine vessel attacking other vessels with torpedoes. The apparatus comprises (1) a plate 1, Fig. 1, graduated along its base 4 for speed or run of attacked vessel or convoy of vessels, and also provided with a protractor scale 5, (2) a radial arm 2 graduated for range of visibility of attacked vessel to attacking-vessel, and (3) a pair of scales 6, 7 pivoted to each other, the former for run or speed of attacking-vessel and the latter for torpedo range. In addition, there may be provided (1) a transparent plate 8, Fig. 2, graduated horizontally for run or speed of attacked vessel and vertically for run or speed of attacking-vessel, (2) a protractor 9, Fig. 1, with concentric arcs the radii of which represent distances traversed by attacking-vessel in definite intervals of time, and (3) a pair of dividers. The limiting angle is read off the protractor 5 after the other scales have been set. The apparatus can also be used for determining other quantities.

Armstrong E R 14143/1904 Surveying instrument

14,143. Armstrong, E. R. June 22.

Calculating - apparatus. —In a surveying or like instrument, in which a telescope 3 is used in the measurement of distances and angles, an indicating-pointer 24 moves over a chart 26 having three sets of lines to indicate respectively the distances read on a distant staff, the distances corrected for the inclination of the telescope, and the corresponding altitudes. The inclination of the telescope is read along the outer edge of the chart.

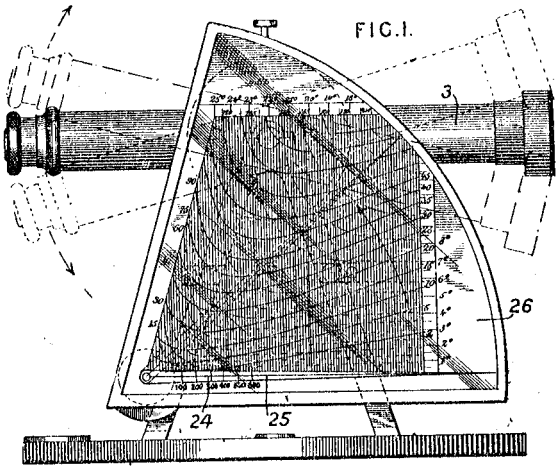

Arton S 117463 of 1917 Adder

117,463. Arton, S. July 12, 1917, [*Convention date*].

FIG.1.

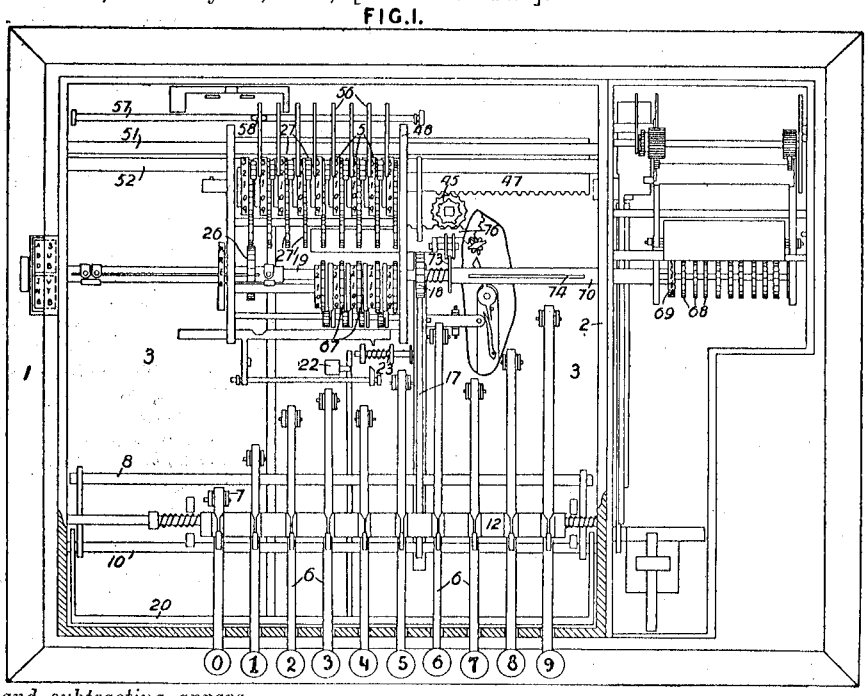

FIG.2.

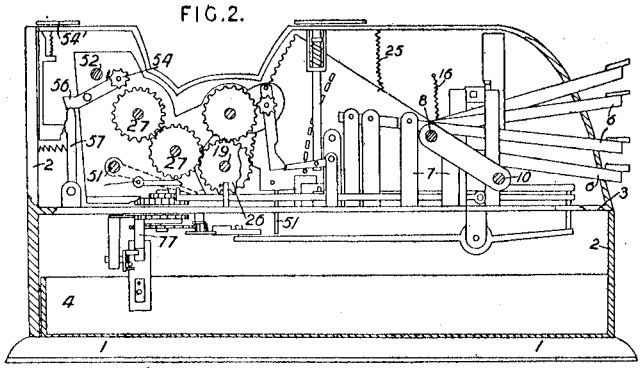

FIG.3.

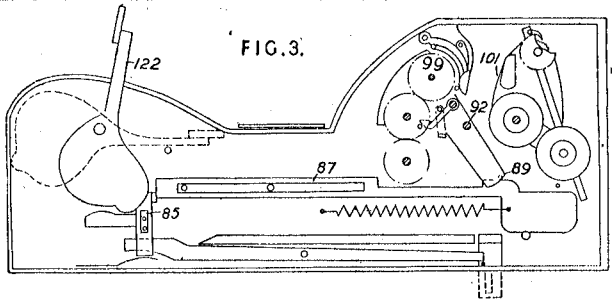

Adding and subtracting apparatus; cash-registers: keyboards.—A cash-register, available also for use as an adding-machine, having a single bank of ten keys is provided with adding and subtracting mechanism movable across the keys so that each key may actuate any index wheel in either mechanism, the subtracting mechanism indicating the change. The cash-register is mounted on a base-plate 1, Figs. 1 and 2, and is enclosed by a case 2 having an intermediate bottom 3 and a cash box 4 on the base-plate. The keys 6 pivot on posts 7 secured to the intermediate bottom 3 and are returned by springs 16. A series of collars 12 are loosely mounted on a squared shaft and pressed together by springs. When a key is depressed, a projection upon it engages between the chamfered ends of a pair of collars and squeezes them together, thus preventing the actuation of any other key. The keys are adapted to engage a bar 8 connected by links to a shaft 10 to which and to the bar 8 is connected a quadrant 17 which gears with a wheel 18 on the shaft 19. A spring 25 serves to return the quadrant. A stirrup 20 also pivots on the shaft 10 and serves, by means of a lever contacting with a fixed inclined stud 22, to move a spring bolt 23 to engage one of a series of holes on the quad-

Atkins R 2737/1803 Hydrometer, Chrono

Hydrometer to Test the Strength of' Spirits. See [14]

ATKINS.
31st October 1803.

2737. A grant unto ROBERT ATKINS, of Fenchurch Street, in the city of London, mathematical instrument maker, for his new invented improvements in the construction of hydrometers for ascertaining the strength of spirituous liquors; and hath invented & adapted a sliding rule of correction for temperature to the hydrometer, & made various improvements thereof; to hold to him, his exors, admors, and assigns, within England, Wales, and the town of Berwick-upon-Tweed for the term of 14 years pursuant to the statute; with a clause for supplying the commissioners of excise with all such articles of the said invention as he should be required, upon such reasonable prices and terms as shall be settled for that purpose by the said commissioners of excise, and also a clause to inroll the same within six calendar months from the date thereof. W. H. M. at Westminster, the thirty-first day of October, in the year above. By writ, &c.

Austin S B 21704/1910 Multiplier

21,704. Austin, S. B. Sept. 19.

Adding and subtracting apparatus with operating-means. —Relates to single-bank machines for adding, subtracting, and multiplying by repeated addition, of the kind in which transmitting-elements successively set are moved step-by-step transversely, the apparatus being suitable for combination with a typewriter.

Differential mechanism; selecting denomination. — The hubs of the keys mounted loose on a shaft 3 have pins to engage spaced pins on the shaft so as to rock it differentially and with it a selector 6 in the form of a toothed cylinder. At the end of its stroke the key rocks a spacing-yoke 21 linked to the frame 26 carrying the pawls 12, 13 co-operating with a spacing rack 11. The rack 11 has uprights between which are placed, loose on a shaft 8, transmitting gear segments 6^1 so that at each movement of the yoke 21 another segment 6^1 engages from right to left with the selector in

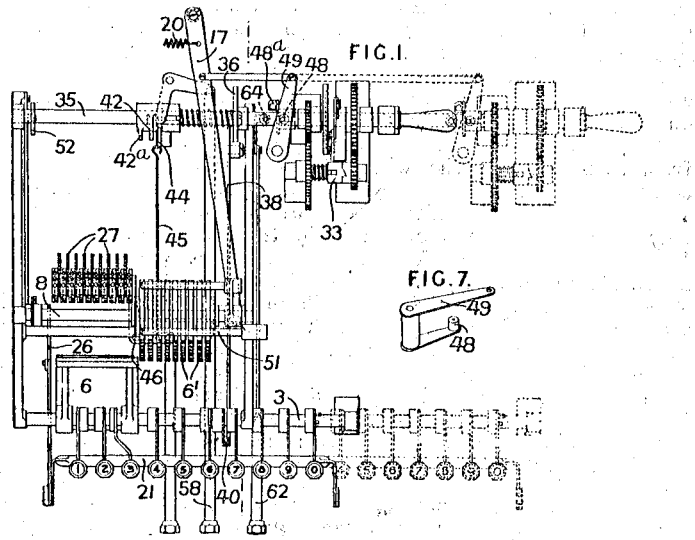

© B O B Williams Printed22/11/2023 CalcPatents Ed. 1.doc

Autokal Syndicate 136628 of 1918 Mult & divide prices

136,628. Clarke, F. M. Russell-, (Executrix of *Clarke, E. Russell-*), and **Autokal Syndicate.** Dec. 17, 1918.

FIG.1.

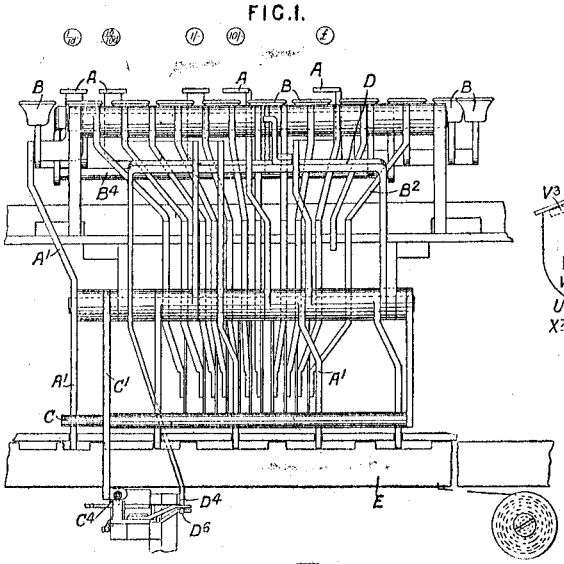

FIG.9.

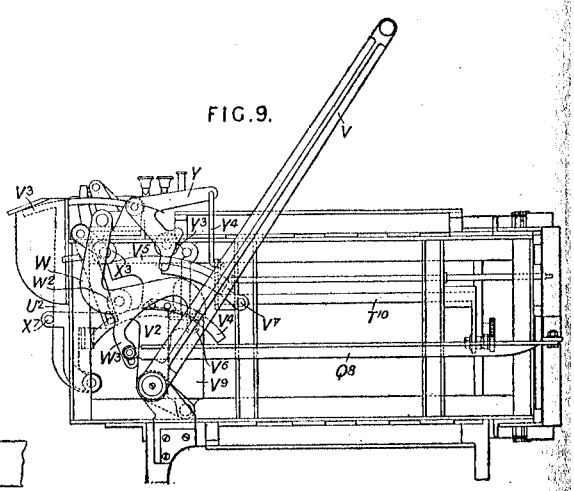

FIG.4.

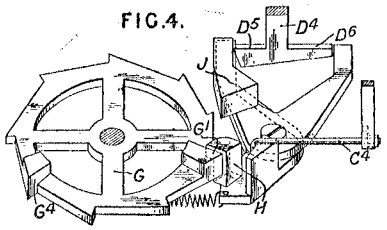

FIG.12.

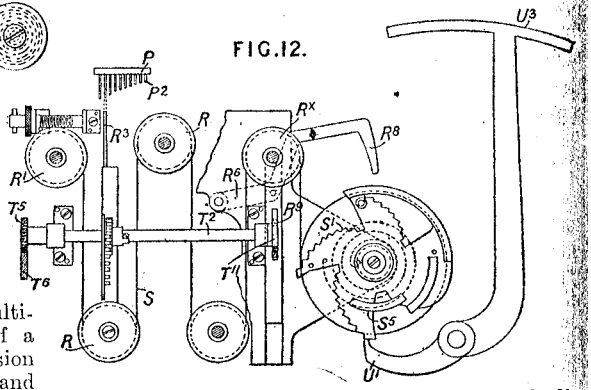

Multiplying and dividing apparatus.—In multiplying-apparatus for ascertaining the cost of a number of articles at a known price, the depression of the necessary denomination-selecting keys and numeral keys, in accordance with the calculation to be performed, actuates the setting-rods through selecting-mechanism comprising an escapement and series of cams adapted to move setting-plates and to position stop-setting rods, to select stops which on the forward stroke of the operating-mechanism determine the movement of product plates, operating as described in Specification 29574/12; a series of pins on the product plates, the lengths of which are a representation of the various partial products, are moved into the path of feelers carried on a frame with pulleys over which pass a flexible wire connected to an adding-unit as described in Specification 7014/10. On the further movement of the operating-mechanism, the adding-units are felt and the result displayed. The return stroke of the operating-mechanism restores all the parts to their initial position.

Selecting-mechanism. Mounted on a frame F^6, F^7, Fig. 5, are a number of rows of pairs of plates K, K^1, L, L^1 notched to receive the ends of longitudinal stop-setting rods M, M^x, M^y, and N, N^1 respectively. These plates and rods are grouped in series "*a*" and "*b*" to deal with tens of articles and units articles, and the selecting of a row is effected by a corresponding pair of cams F^2, F^3 mounted on a shaft under the control of an escapement-wheel G and pawls H, J, Fig. 4, the movement of which through a differentially

Auty J 4208/1883 Add punched cheques

4208. Auty, J. Aug. 31.

[*Provisional protection only.*]

Counting-apparatus &c.—Relates to a machine for counting and registering the value of cheques. The cheques are formed with holes through their centres, the holes varying according to the value of the cheques, and the cheques of each value are carried on separate spindles fitted in suitable tubes. The cheques can only be removed one by one, an arrangement of levers, which actuate by means of ratchets &c. numbered dials showing the number of cheques drawn out, and the value of the same. The whole apparatus is enclosed in a suitable case, to prevent its being tampered with.

Abridged also in Class *Books*.

Avery C H 14853/1912 Circ slide rule for price of wool

14,853. Avery, C. H. July 3, 1911, [*Convention date*].

Slide-rules.—Logarithmic apparatus is described for use, *inter alia*, in connexion with calculations of (1) the price of pure wool per pound, when the cost of the grease wool and the percentage loss during the process of cleaning are given; and (2) double, that is, consecutive, discounts. The apparatus comprises (*a*)

FIG. 1.

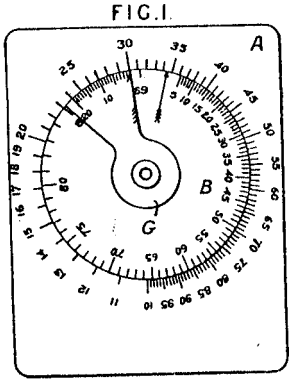

a plate A bearing a circular logarithmic scale of values; (*b*) a pivoted disk B provided with a logarithmic scale of percentage losses, but having the graduations marked with, instead of the numbers representing the corresponding percentages, the differences between such numbers and 100; and (*c*) a sector G graduated similarly to the disk B. The apparatus shown in Fig. 1 can be used for calculating double discounts, but the application of the invention to British monetary values is fully described and shown in the Specification. The graduations on the scale on the disk B may run in either direction.

Babbage H P 10399/1894 Adder

10,399. Babbage, H. P. May 29.

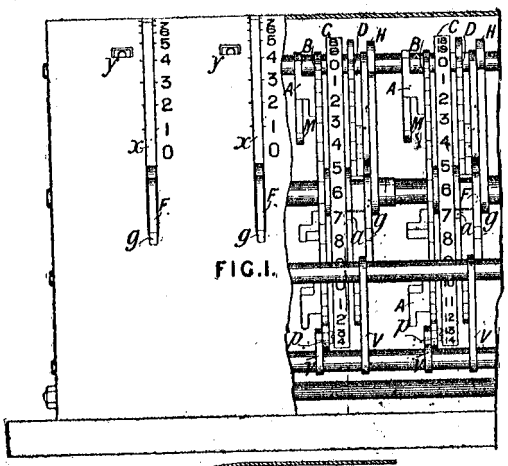

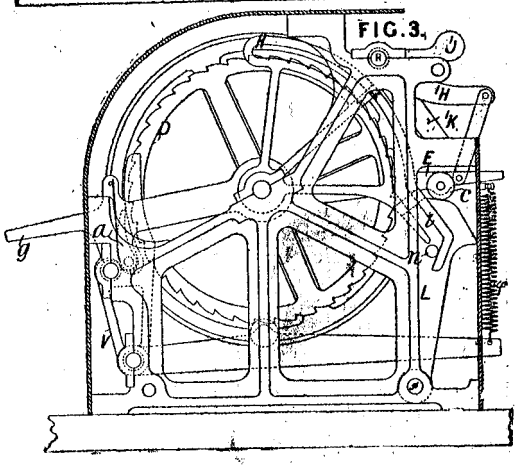

Calculating - apparatus; receipts, checking and recording.—This is intended to be used in adding long money columns, but can also be used to record the money taken in a place of business. Fig. 1 is a part front view (partly in section), and Figs. 3 and 5 cross-sections of a machine capable of adding up to £1000. To add, for example, two numbers of pence, the pence lever *g* is first raised to a point opposite the first number, the numbers being placed at the edge of a slot similar to *x* in Fig 1, and after being returned to the bottom of the said slot is raised to a point opposite the second number. The lever *g* carries a pawl *a* which, during the movement of the lever from the bottom of the slot

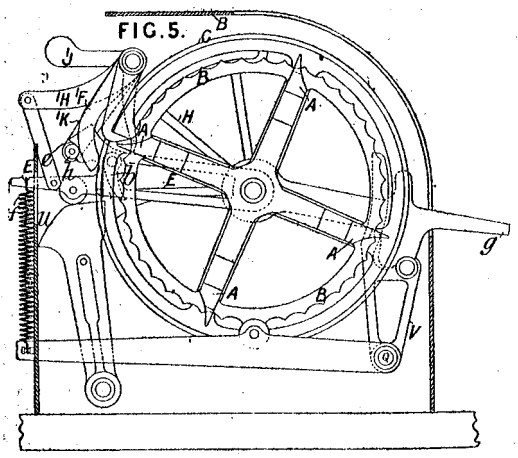

to the number O, is held out of gear with the ratchet-wheel D by a guide piece V. When the lever reaches the number O on the index the pawl falls into gear with the said wheel D, and the further movement of the lever rotates the said wheel and also a disc C which carries four series of numbers 1 to 11, which are seen through an opening in the outer case similar to *y* in Fig. 1. The lever *g* has a curved slotted extension H, *l*, *l*, which, by means of a roller *n*, moves a lever L from under the roller *c* on a lever E, and leaves the latter free to move in any direction. All the levers L, L of the various counters are on one spindle, so that the movement of one frees all to allow of "carrying," if necessary. When the lever *g* has been operated to add the second number of pence to the first and the total is more than twelve, one of four cams A, A, Fig. 5, pushes aside a lever and withdraws a roller *h*, carried by a lever ^{1}K, from under the edge *e* of an extension of the lever E. A spring *f* then moves the lever E downwards sufficiently to move the ratchet-wheel D of the shillings counter through one division by means of the pawl *b*. This movement is made dead-beat by a lever ^{1}F which engages a rosette wheel B, and is moved by a link and lever ^{1}H from the lever E. When the lever *g* is moved downwards, ready for a second stroke, a weighted pawl ^{1}J prevents the wheel D moving backwards, and the levers L and ^{1}K are returned to the former positions in which they lock the lever E. The adding-apparatus for shillings and pounds is operated in a similar way.

Babini L 26890/1912 Key set adder

). Babini, L. Nov. 22.

ng - apparatus ; g denomination; itial mechanism.

ey - set and ope- adding-machine, sing a single of keys and a ing carriage on is mounted the er, is provided ieans whereby the g of the carriage one denomination next is effected steps on the first ich the numeral- ls are advanced n the second the ing - parts are ned to their l, position. Each ver 3, Fig. 1, is cted by links 10, o corresponding ied segments 9 ed to rotate an ated drum 18 when a key is depressed. ie spindle 19 of the drum is mounted a oothed mutilated master-actuating wheel which in the normal position has the ated part adjacent to the totalizer-wheels hich are mounted on a shaft 22 in the ble carriage. The wheels 21 are rotated n amount depending on the key depressed n the number of teeth of the corresponding ent. At the end of its stroke, the seg- strikes a cross-bar or yoke 15 secured to rank levers 13 pivoted on a spindle 8, and by raises a yoke 16, attached to arms 14 adapted to raise an arm 60 mounted on k 37 and thus swings the rack backwards lease a stop 43 on the movable carriage, n is thereupon drawn to the left by a g motor until it engages a stop 44. In position, the hubs of the totalizer-wheels re opposite the wheels 20, and when the essed key is released the master actuating-

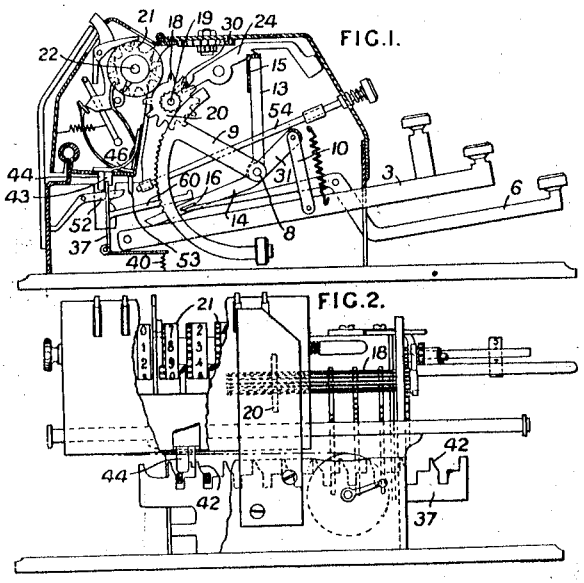

wheel 20 and associated parts will return to initial position without affecting the totalizer-wheels. The yoke 15 is held forward by a notch in a lever 24, and is released therefrom by a pin 30 on the wheel 20 depressing the end of the lever 24. The yoke then returns to normal position and a spring 40 returns the rack 37, a tooth 42, Fig. 2, thereof passing through a notch in the stop 43, which will be moved to engage the next tooth of the rack. The " 0 " key-lever 6 when depressed moves the carriage one denomination to the left by raising the yoke 16, and a spacing-key operates the arm 60 directly to move the carriage. The stops 43, 44 are mounted on a spring-arm 46 and can be raised to space the carriage for a second item by means of arms 52, which are operated on the depression of corresponding rods 54, whereby the carriage is released from its rack until a stop 53 engages the end of the depressed rod 54.

Bagshaw W 17962/1887 Indicator diagram

17,962. Bagshaw, W. Dec. 31.

Calculating - apparatus. —Relates to an instrument for measuring the average pressure of steam-engine indicator diagrams. The instrument resembles a pair of compasses, a dial *d* being mounted on the pivot *c* of the legs *a*, *b*. When the legs are opened a spring pawl *e* turns the dial an equal angular distance, and return movement is prevented, as the legs are closed, by a spring detent *f*. *h* is an index to show the distance the dial has moved. Supposing the diagram to be divided into ten parts, the ten ordinates are measured by the compasses, the legs being closed between each

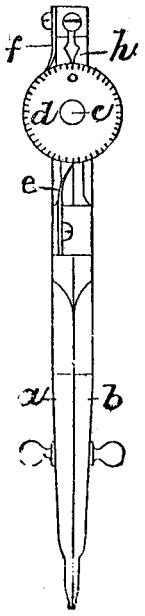

Bahmann G A 3757/1888 Adder

3757. Bahmann, G. A. March 10.

FIG.13.

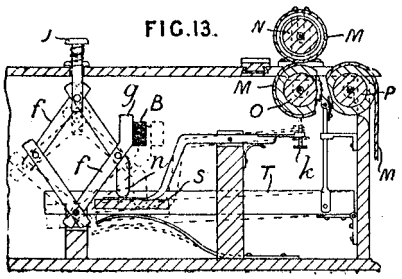

Calculating-apparatus.—Relates to adding-apparatus, in which a counting-wheel marked with 100 divisions (or more) is driven by a pawl acting on a ratchet-wheel on the same spindle as the counting-wheel, and having the same number of teeth as the latter has graduations. The hundreds are counted by an independent wheel or by a sliding rack moved one division at each rotation of the counting-wheel. The actuating-pawl may be carried either by a pivoted handle-bar working over an arc graduated from 1 to 9, or by a frame mounted on a pivot and worked by keys numbered 1 to 9, which impart a movement to the frame corresponding to the number on the key. There is also a registering-mechanism and means for returning the counting-wheel to zero. Fig. 13 shows one form of the apparatus. B is the lever carrying the actuating-pawl of the counting-mechanism (not shown). It is moved against the action of a spring by the projecting arm *g* of the parallelogram of links *f*, *f* when the key J is depressed; the amount of movement corresponds to the number of the key J. The projection *n* is arranged to depress the pivoted lever S, T during a portion of its movement, which must be the same for all the keys, and so move the feed-rollers O, P and the marker *k* a definite distance. On the roller N is a paper strip M which is carried between the feed-rollers O, P, and so for each movement of any key is moved forward a definite distance. The paper is ruled longitudinally into 9 spaces, and the marker *k* leaves a record of each depression in the space corresponding to its key. A three-armed lever, provided with a handle on one arm and studs at the ends of the others, which come under the actuating and retaining pawls of the counting-wheel, is employed for holding up the pawls while the wheel is being returned to zero. Another arm may be added to the lever for holding up the retaining-pawl of the hundreds wheel, or this may be done independently.

Bahmann G A 17035/1904 Tab Calc

17,035. Bahmann, G. A. Aug. 3.

FIG.I.

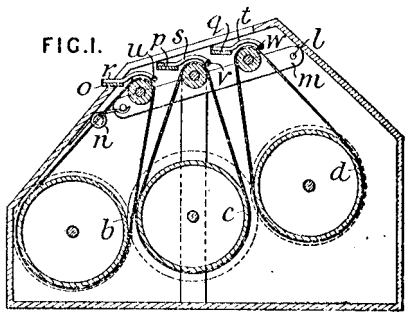

Calculating - apparatus. — Calculator rolls for multiplication and division are made with three separate bands mounted on separate rollers, but turning together, and bearing the products (1 to 50)×(1 to 50), (1 to 50)×(51 to 100), and (51 to 100)×(51 to 100), respectively. To counteract the effect of dampness on ribbons of linen or similar material, the smaller rollers are mounted on side-bars *m*, pivoted at *l*, guided in slots, and supported by springs *n*. The larger rollers are geared together by friction-wheels or otherwise, and are turned simultaneously by means of a handle on the shaft of the middle roller. The springs *n* also serve to keep the bands in position after turning. The cross-bars *o*, *p*, *q* show the respective factor-figures 1 to 50, 1 to 50, 51 to 100. Indicators *r*, *s*, *t* are movable on guide-bars *u*, *v*, *w*. To economize space, the product numbers may be arranged in their squares in a diagonal direction.

Baines H M 25109/1903 Poly slide rule

25,109. Baines, H. M. Nov. 18.

Calculating-apparatus. — The computing-scales of an abacus diagram are placed each upon the sliding elements of a rule, four such elements a, a^1, a^2, a^3 being shown in Figs. 1 and 2. These sliding-pieces are then so constrained to move, by means of a jointed parallelogram b, b^1, b^2, b^3, to which they are attached at the points c, c^1, c^2, c^3, that they all move together in chosen ratios, whereby, if they bear suitable scales, it does not become necessary to read the corresponding numbers upon a straight-edge placed at any angle, as in the usual abacus diagram, but the two arguments having been placed vertically above one another, the corresponding quantities are found in the same vertical line. The scales indicated in Fig. 1 are for solving problems in hydraulics. The sliding parts may either be adjacent as shown, or there may be spaces between, and the scales for a particular formula are either permanently attached to a parallelogram, or used with an adjustable parallelogram.

FIG. 1.

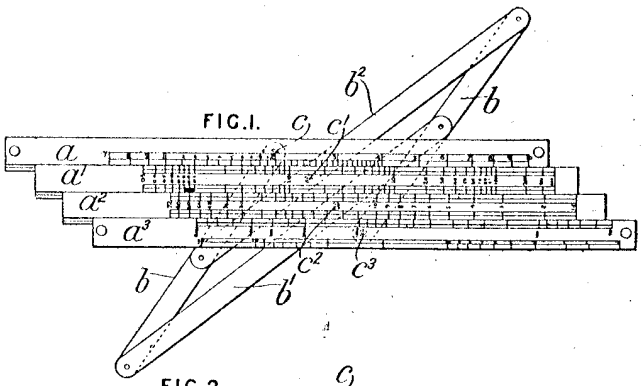

FIG. 2.

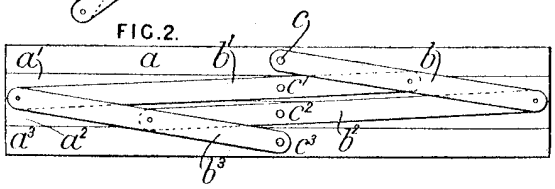

See [15]

Picture from eBay

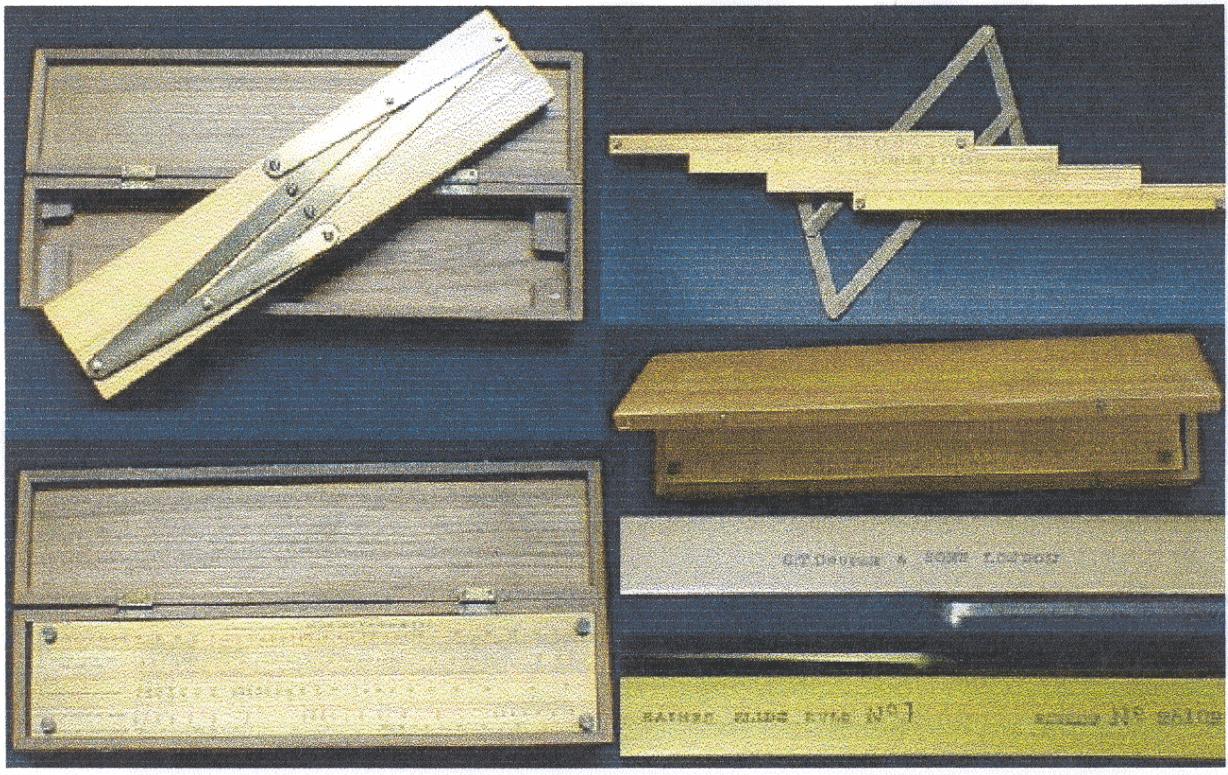

Baker E 675/1893 Shore distance

675. Baker, E. Jan. 12.

Calculating-apparatus. — The apparatus is for indicating the distance of a ship from some point on shore, the distance it will pass abeam of such point, the alteration of course necessary for passing at a given distance, &c. It consists of a circular plate *a* graduated with concentric circles and having two diameters *b b*, *c c* at right-angles. Over the plate work arms *f*, *f*, *g*, *g*, their inner edges forming diameters. A compass card ring surrounds the plate and may be independently movable if desired. All the parts may be fixed in position by a special clamping-device operated by the screw *i* and nut i^3. To determine the distance of an object on shore the point is sighted along the pointer *f* and then, after the ship has run a known distance, along the pointer *g*, the diameter *b b* being set to ship's head. A rule *j* is then placed parallel to *b b*, so that the distance run is indicated by the portion of the scale *z*, *y* on the rule intercepted between the pointers; *y*, *i* then gives the original, *z*, *i* the present distance of the vessel from the object, *x*, *i* the distance at which it will pass abeam &c.

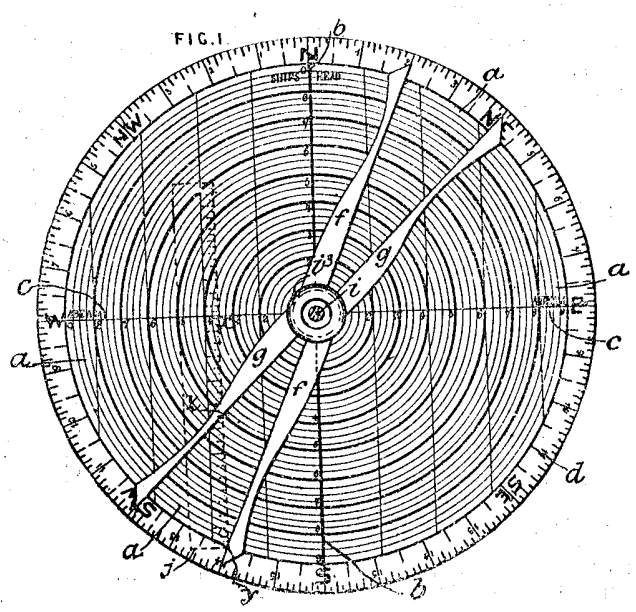

Baldwin F S 14152/1913 ASMD

,152. Baldwin, F. S. *Nov. 26, 1912.*

Multiplying and dividing apparatus.—Relates principally to the transfer mechanism of ...-set handle-operated ...chines for the four ...es such as are described in Specification 231/12, wherein each ...nk of keys 18, Fig. 1, ...ermines, by the aid ... wedge-shaped mem...s 25 upon the lower ...ls of the key stems, ...operating with vari...ly-rocking bars 19, ... adjustment as to ...ective number of ...eth of a compound ...heel 5 assigned to that ...nk, the subsequent ...tation of a main operating handle 3, Fig. 2, ...tating all such wheels ...d thereby differentially actuating totalizer-...heels 13. The totalizer is mounted in a ...rriage 2, laterally movable upon a transverse ...aft 59 for the raising of a product standing ...ereon by powers of ten, receiving-wheels 12, ...m or product indicating-wheels 13, and multiplier indicating-wheels 85 being provided.

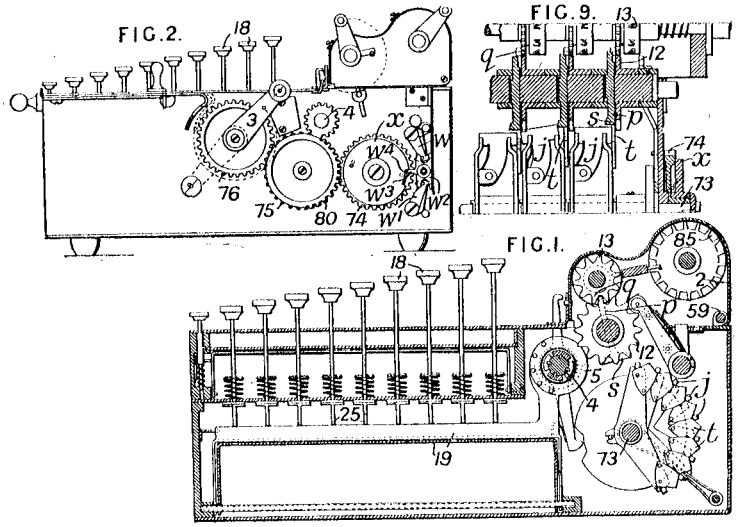

Transfer mechanism.—Transfer teeth *q* upon the numeral wheels depress spring-controlled plungers *p* having flattened lower cam ends *s* adapted in their lower position to lie in the path of and rock T-shaped pieces *j* carried by the transfer arms spirally-arranged upon a transfer shaft 73, which is rotated so as to effect successive transfer on the various denominations subsequently to rotation of the main

© B O B Williams Printed22/11/2023 CalcPatents Ed. 1.doc

Baldwin F S 14153/1913 ASMD

14,153. Baldwin, F. S. *Nov. 26, 1912.*

FIG. 3.

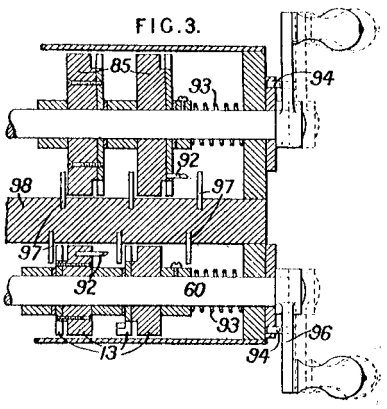

Multiplying and dividing apparatus; zeroizing-mechanism.—Machines for the four rules of arithmetic, performing multiplication by repeated addition with the aid of a laterally-movable totalizing counter, as set forth in Specifications 27,231/12 and 14,152/13, are provided with zeroizing-mechanism for the numeral-wheels of the totalizing-counter and the multiplier indicator, wherein the numeral-wheel spindles are moved axially and are then rotated until the wheels are arrested by stops in the zero position. The spindle 60 of the totalizing-counter is drawn axially by means of an external handle 96 against the pressure of a spring 93. A locking-pin 94 is thus freed for rotation of the handle and the numeral wheels 13 are also moved axially by means of suitable spacing-collars, so that on rotation of the handle, the wheels are carried round by frictional engagement with the spindle until axial pins 92 thereon abut against radial pins 97 in a stationary bar 98, whereby the zero position is defined. The bar also supports other pins acting as zero-stops for the multiplier-indicator numeral-wheels 85, which are zeroized in a similar manner. The totalizing-counter carriage is pivoted along its rear edge, whereby the totalizer may be disengaged from its actuating-wheels for zeroizing.

47

Ball F 15616/1915 Tidal calculator

15,616. Ball, F. Nov. 5.

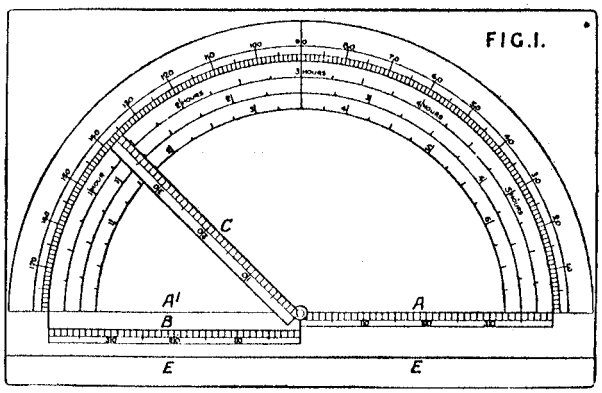

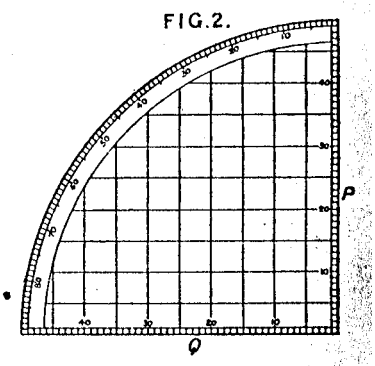

Plane-trigonometry calculators; tides, calculating height of.—Apparatus for navigational purposes comprises a semicircular protractor having a radius-arm C, and a separate transparent quadrant graduated along its edges P, Q to represent lengths and marked with lines at right-angles as shown. The quadrant, in use, is placed in any required position relatively to the scales A, B, C or to the lines A^1, E. The arm C rotates in a recess in the protractor, which is also graduated with scales representing hours, as shown, for the solution of tidal problems.

Bannehr, Dolton, Gilbert, Watson 15291/1913 Adder avoirdupois

15,291. Bannehr, L. W., Dolton, J. H., Gilbert, J. B., and **Watson, G.** *May 9, 1912.*

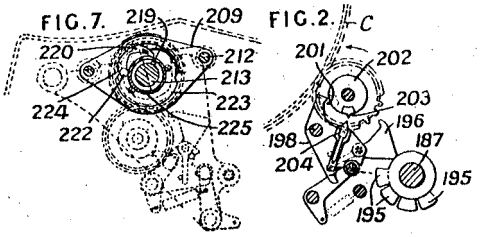

Machines for summing and subtracting positive and negative items; error-keys &c.; transfer mechanism.—Relates to the totalizing-counter of machines for summing series of corresponding gross and tare values, and computing and summing the net values for each pair of values, of the type described in Specification 11,076/12, and also to the mechanism necessary for transferring between the net item printing or representing members when a tare digit exceeds the corresponding gross digit. The apparatus is described as applied to the avoirdupois system. Fig. 2 shows the transfer parts for the net members in tripped position. Manually-adjusted net setting-wheels *c* engage, for the purpose of transferring, with pinions 202, the transfer-tooth 203 of which is adapted to displace a spring-controlled projecting member 204 upon a pivoted carrier 198, which is thereby rocked so as to bring a transfer-pawl

Bamlet, Box & Williamson 22921/1911 Add & multiply

22,921. Bamlet, W. H., Box, A. E., and **Williamson, F.** Oct. 17.

FIG.3.

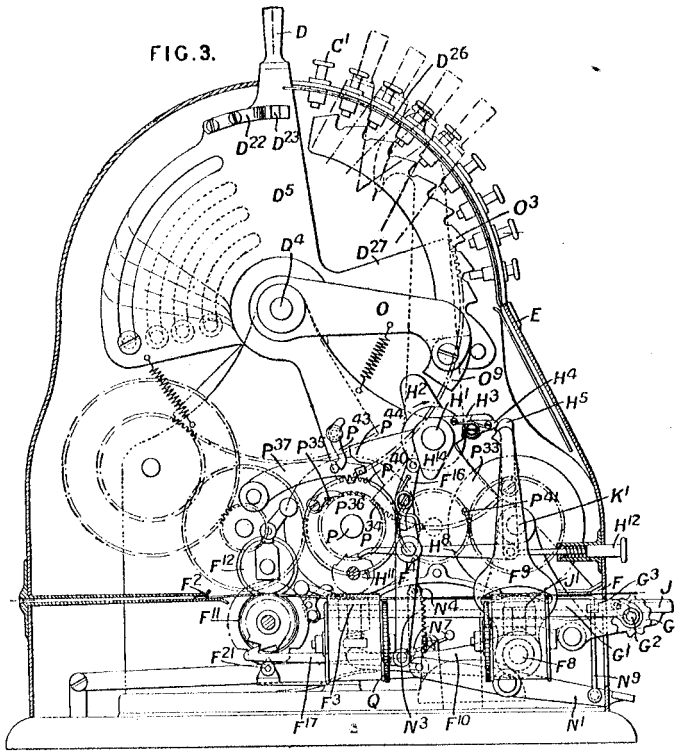

FIG.25.

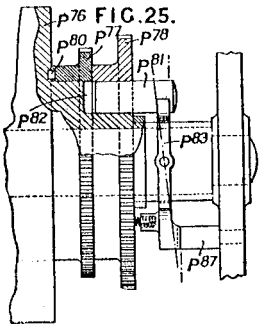

Adding and multiplying apparatus.—A key-set lever-operated calculating-machine, adapted to calculate, at given rates, the dividend, tax, and net value of the dividend on stocks and shares and to totalize the same, is provided with means whereby the setting-up and totalizing of a plurality of digits in different denominations to represent the stock automatically sets the other mechanisms for recording and totalizing the predetermined ratios to the digits set up. The item of stock is set up by depressing stop-keys C . . . C³, Fig. 5, and then pulling forward the setting-handles D . . . D³ which, by means of springs D²², co-operate with the stop-keys to limit the movements of the handles and the corresponding sector-pieces D⁵ . . . D⁸; the amount set is indicated on strips D²⁶ which are visible through apertures E . . . E³. Rotatably mounted on the shaft

FIG.5.

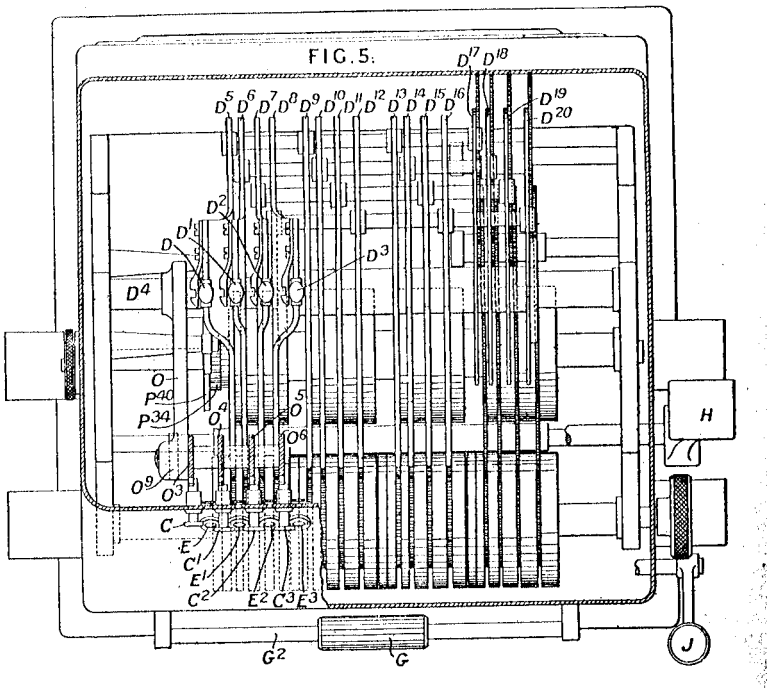

Banwell E 121009 of 1917 Tab calc for wages freight etc

1,009. Banwell, E. Dec. 27, 1917.

FIG.1.

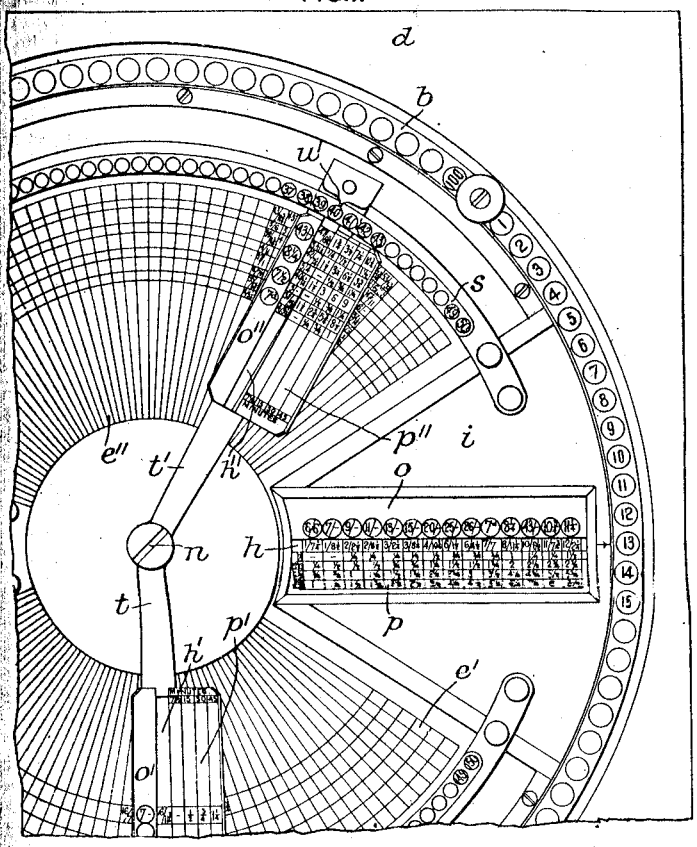

FIG.2.

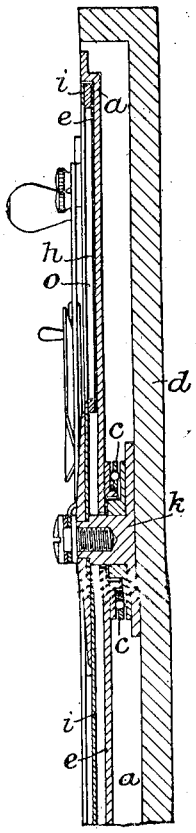

Tabular calculators.—An apparatus for calculating workmen's wages, railway freights, insurances, &c. comprises a disk *a* mounted to revolve on a post *k* carried by a casing *d*, a ball-bearing being inserted between the disk and the base of the post. Mounted on the main portion of the disk *a* is a card *e* bearing the wages corresponding to the different hours at varying rates, the hours being marked on a flange b_1 and the rates on one sloping side *o* of a glazed opening *h* formed in a fixed disk *i* carried by a squared part of the post *k*. On the other sloping side *p* of the opening *h* are marked the wages amounts for fractions of an hour at the rates shown on the side *o*. In operation, the disk is revolved until the hour required is opposite the opening *h*, the wages corresponding thereto being read off at the appropriate rate, any amount due for a fraction of an hour being added thereto. To facilitate the calculation of additional wages due to bonuses &c., similar supplementary charts e^1, e^{11} are mounted on the stationary disk *i* co-operating with hour graduations carried by an arc *s*, and with reading arms *t*, t^1 pivoted on the post *n*. The arms *t*, t^1 carry sloping portions o^1, o^{11}, p^1, p^{11} bearing whole and fractional wages rates and are formed with reading apertures h^1, h^{11} and index points u^1.

A1

Baranowski J J 11806/1847 Ready Reckoning machine, Tabular Calculator Full

A.D. 1847, July 19.—Nº 11,806.

BARANOWSKI, JOSEPH JEAN.—"A ready-reckoning machine."

This machine is "constructed and arranged so that commercial "tables or ready reckoners may be used and read for the pur- "poses for which they are intended, by bringing into view, by a "simple mechanical operation, such of the symbols or numbers "only as are necessary for or form part of the particular calcula- "tion or result to be ascertained, the rest of the numbers on the "table being at the same time concealed from view."

In one arrangement, suitable for ascertaining the charge for the carriage of coals various distances on the London and South-Western Railway, the results previously calculated are placed upon a roller of fourteen sides, each side corresponding to and containing the prices of the carriage of certain specific quantities of coal arranged in a column for a particular place, reckoning the starting point to be London. The said roller is mounted in bearings in a box with a longitudinal aperture opposite to that side of the polygonal roller that is uppermost. The box has also slides that reveal to view the charges on the cylinder that correspond to the weight represented by the slides, so that (the slides representing units, tens, &c. of hundredweights and tons) the slide which is moved in its slot uncovers the corresponding charge. The names of the stations are placed round a circular disc, and the movement of an indicator over the disc to the name of the station rotates the polygonal roller by bevil gear, and brings the right column in front of the longitudinal aperture. The numbers exposed are added together to produce the total.

Applications of this invention to exchanges, workmen's wages, and interest calculations are set forth, in which a similar arrangement is adapted to the particular purpose desired.

[Printed, 1*s.* 8*d.* Drawings. See London Journal (*Newton's*), Vol. 33 (*conjoined series*), p. 234; and Patent Journal, vol. 4, p. 337.]

For discussion of this machine see [Williams Bruce O, 2003 #90]

Picture of the machine
Baranowski at the Great Exhibition 1851, French stand

may be transposed, to increase the difficulty of imitation or fraud. This machine is represented in the illustration on the preceding page.

Gas meter index, and ballot box, illustrating two other applications of the same invention. This index is shown in the preceding page.

Ready reckoning machine. This apparatus, which is represented in the annexed cut, is applicable to all banking, commercial, and industrial operations. To work it, it is only necessary to turn a handle, and to push or displace one or more buttons, numbered by series. The products sought after appear immediately. These products cannot be questioned or disputed, because they are calculations made and checked beforehand. Moreover, they are controlled by the numbers on the buttons which have been displaced. One of the models shown is for calculating workmen's wages, and another for the rates of carriage of goods or merchandize.

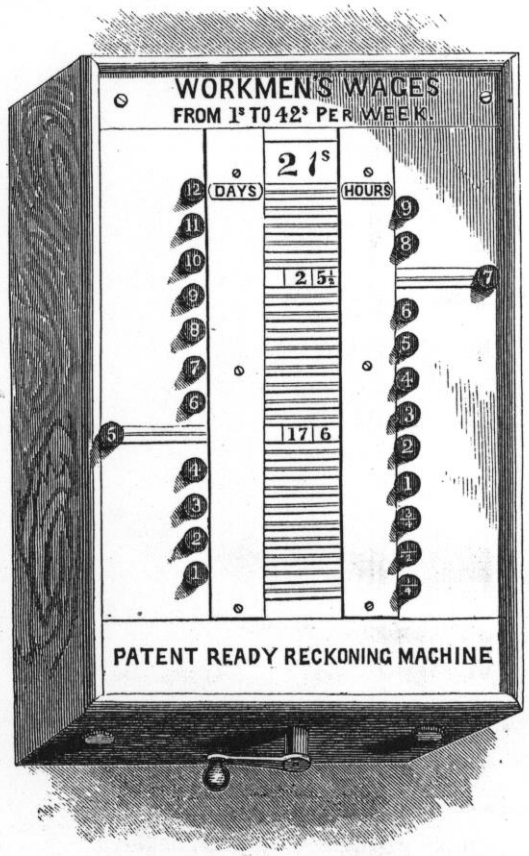

Baranowski's Patent Ready-reckoning Machine.

Barbour E D 2437/1872 Calculating apparatus

See*[7]*

2437. Barbour, E. D. Aug. 15.

FIG.1.

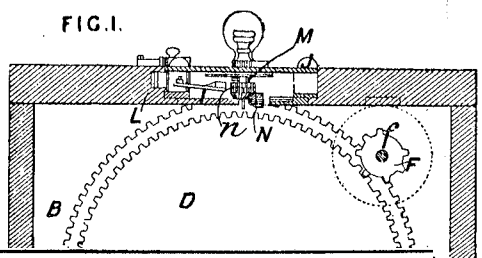

FIG.4.

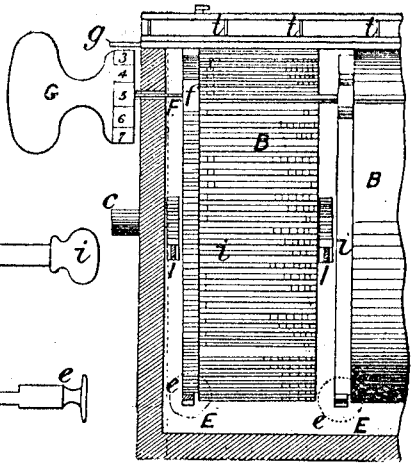

Fig. 4, revolve loosely on a horizontal shaft *c*. Each cylinder carries on its surface eighty-one racks divided into nine series each containing nine racks. The racks of the first series contain 1, 2, 3, 4, &c. teeth respectively; those of the

FIG.5.

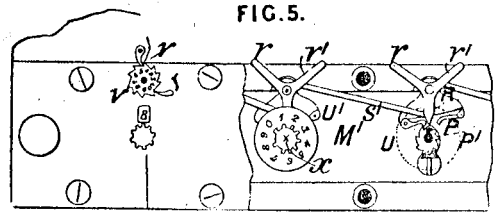

weights, money, and measures, or decimal a vulgar fractions, for arranging accounts, or e tracting square roots, &c. A series of cylinders

second series 2, 4, 6, 8, &c. teeth; those of the third 3, 6, 9, &c. teeth, and so on. For numbers above ten, however, the units are represented by an equivalent number of teeth at the left-hand end of the rack, and the tens by teeth at the right-hand end. Each cylinder B has attached to it a large toothed wheel D and a small toothed wheel H, as shown in Fig. 1. By means of the wheel H and a rack I with a handle *i*, the cylinder B can be rotated in steps of one-ninth of its circumference, viz., to the extent of one series of racks. The toothed wheels D and rack E with handle *e*, enable the cylinder B to be rotated in steps of one-ninetieth of its circumference, viz., to the extent of one rack. The racks I and E are graduated on their upper faces. The cylinder B can also be adjusted, in steps of one rack at a time, by a graduated handle G on a shaft F carrying toothed wheels *f*. The toothed wheels *f* have blanks which correspond to the zero of the handle G. For multiplication, the knobs *i*, *i* are drawn out until the graduations on the bars I, I indicate the number to be multiplied. The handle G is then turned until the graduation at *g* indicates the right-hand figure of the multiplier. It only remains to count the teeth now at the top of the cylinder. This is done by a number of toothed wheels N which are run over the racks on the cylinders B, by pushing the slide J one step to the right in guides L. Each wheel counts at one stroke the tens on one cylinder and the units on the next higher cylinder. The bevel-wheels N, Fig. 1, gear with wheels *n* on vertical shafts M. The shafts M have dials M^1 as shown in Fig. 5, the readings of which are read through holes in the upper plate J. When a spindle M has made a complete revolution a projection on it touches a lever R so that one of the arms *r* or r^1 is placed in a position to be tripped by one of the studs *t*, *t*, Fig. 4. By the tripping of the arm *r* or r^1 motion is communicated through rods s^1 which are attached to the levers R and the pawls U, U^1 and ratchet-wheels P or P^1, thereby moving the dial to the left one-tenth of a revolution. To add, the knobs *e*, *e* are drawn out until the first of the numbers to be added appears on the bars E, E; the slide J is now drawn one step to the right and the numbers will be transferred to the dials. The pinion N is then thrown out of gear and the slide drawn back, and the second number on the bars E having been set, the slide J is drawn one step to the right again. The registering dials will now show the sum of the first and second numbers. In subtraction, the knobs *e*, *e* are drawn out until the larger number appears; the slide J is then drawn one step to the right, the knobs *e*, *e* set to indicate the smaller number, and the slide J pushed back again. The registering dials will now indicate the difference. For division, all the figures of the dividend are placed upon the dials M^1 and the knobs *e* are then drawn out until the figures of the divisor appear on the bars E and directly under the left-hand or highest figures of the dividend. The slide J is then moved one step to the right, the pinion N thrown out of gear, and the slide moved back again. The operation is repeated until a smaller sum than the dividend appears on the registering dials. The quotient is shown by ratchet-wheels pivoted to the plate J and operated by single tripping pawls *v*, Fig. 5. For bringing the dials back to zero a slide is provided having racks which engage with wheels *x*. The wheels *x* have nine teeth and one blank.

Barlow W H 3506/1867 Calc apptus Quantities in railway cuttings, 2 discs,

3506. Barlow, W. H. Dec. 10.

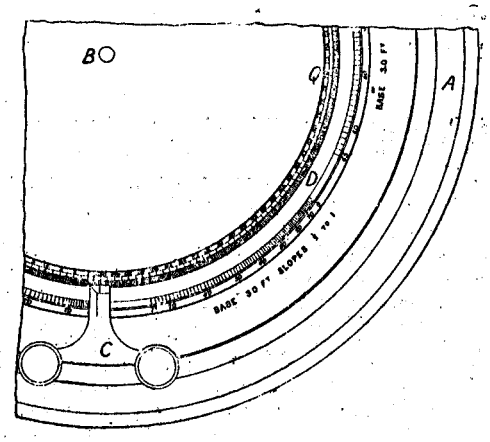

Calculating-apparatus.—Relates to apparatus for measuring the quantities in continuous cuttings and banks, such as in railways. It consists of two discs revolving round a pin B on a stand A. The upper and smaller disc is divided at its edge into 100 equal parts. This scale Q is called the 'quantity' scale, each division representing 1,000 cubic yards; it may be subdivided. At the lower disc are marked several 'depth' scales D, for different angles of slope and width of formation at the top of a bank or bottom of a cutting. The lower disc may be held to the stand by a clamp C, which is provided with a pointer for the quantity scale. The 'depth' scales are constructed as follows:—From the zero of the 'quantity' scale are marked off the quantities of cubic yards in arc chain length of a bank or cutting, of the depths one foot, two feet, &c. The zero of the 'depth' scale is then placed in the same radial line with the zero of the 'quantity' scale, and through the points marked off radial lines are drawn to intersect the 'depth' scale. In using the instrument, the proper 'depth' scale is taken to suit the slope of the bank or cutting, which has been measured, then by means of a needle point the zero of the 'quantity' scale is brought to the pointer on the clamp C, and the zero of the depth scale is brought in the same radial line. The lower disc is then clamped. Then, putting the needle point on the 'quantity' scale, opposite the point on the 'depth' scale which indicates the depth of the first chain length of the cutting &c., the upper disc is turned until the needle reaches the pointer C. For the second chain length this is repeated, and so on, until the whole cutting is gone over, when the pointer C will indicate the quantity in cubic yards; or, if the disc has made one or more complete revolutions, 100,000 cubic yards is added for each complete revolution.

Barnard H O 22630/1906 Solve triangles

22,630. Day, C. A., [*Barnard, H. O.*]. Oct. 12.

FIG. 3.

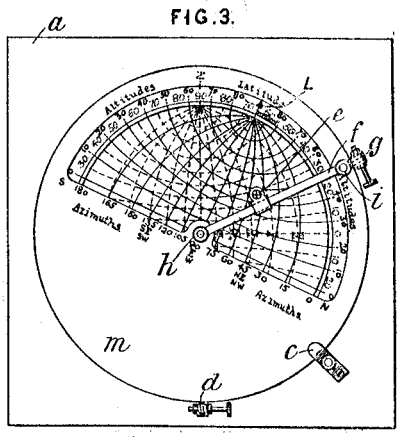

Calculating-apparatus.—Apparatus, for the solution of problems in spherical trigonometry, consists of superposed and relatively rotatable disks on which are spherical projections drawn on the same scale; the upper disk is transparent and the required result is given by the intersection of curves on the disks. Fig. 3 shows an opaque card *a*, on which is inscribed a stereographic projection of a sphere, of which only a part is shown in dotted lines. Concentrically superposed on this is the transparent disk *m* with a similar projection. On the card declinations and hour angles are read, while on the disk altitudes and azimuths are read, there also being a latitude index L. To find the hour angle, given the declination and altitude of a star, say, and also the latitude of the place of observation, the disk *m* is rotated until the index L indicates the given latitude. Then the point of intersection of the curves of given altitude and declination is found. This point is on the curve of the hour angle required. The apparatus can also be used for problems on the rising of the sun, length of day, &c. To facilitate reading and adjustment, the apparatus is provided with an adjustable microscope *e* carried on a rotating arm *f*, and also with tangent-screws *d*, *g* and clamps *c*, *h*, *i*.

Barnett D Agent for unknown foreigner 11441 /1846 stylus driven Tabular calculator Chrono

A.D. 1846, November 5.—N° 11,441.

BARNETT, DAVID.—(*A communication.*)—"New or improved "instruments or machines for effecting or facilitating certain "arithmetical processes or computations."

1st. "An instrument or apparatus for effecting the arithmetical "processes of addition and subtraction." This instrument consists "of a series of toothed wheels, on each of which a series of "numbers are inscribed, the said wheels being wholly uncon- "nected with each other, and moved by a stile introduced between "the teeth thereof, the said stile moving only the wheel between

Barr, Bell & Bramston 5675/1915 Electric brush adder

5675. Barr, M., Bell, R. A., and **Bramston, M. A.** April 15.

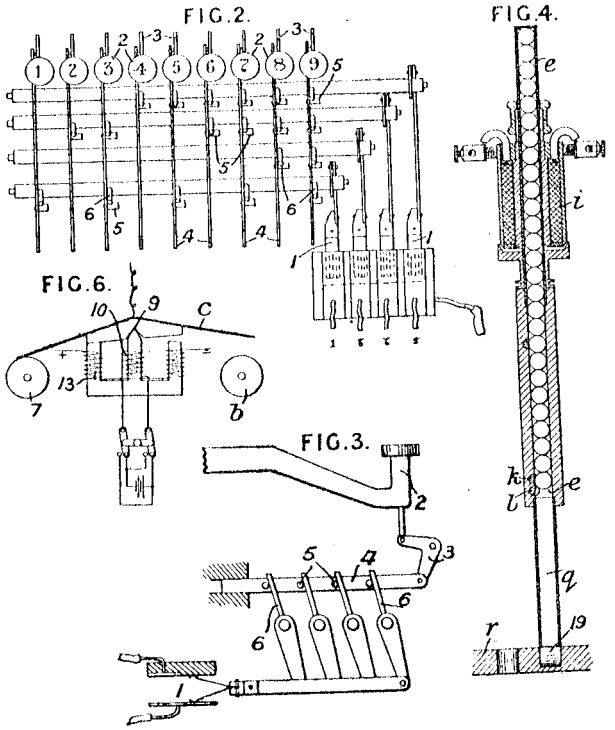

Adding and subtracting apparatus with operating-means.—In an electric independently-operated adding and subtracting machine a group of brushes is provided for each denomination, any number of which brushes may be set to bear against one of two cylinders having groups of contacts, whereby, when the cylinders are rotated, impulses are transmitted to counters from which totals may be printed. Fig. 1 is a diagrammatic representation of a machine having a range from 0 to 9 in four denominations. A cylinder *b* is provided for each denomination with a set of nine contacts *a* arranged in staggered groups of four, two, two, and one, so that any number from 1 to 9 can be built up by connecting one or more groups in circuit. Opposite each group *a* is a brush or "putter" *c*, comprising a rocker placed on a knife-edge 9, Fig. 6, forming the central limb of an electro-magnet the outer limbs of which are constantly energized, while the direction of the current in the coil 10 may be reversed to cause the putter to rock against the cylinder *b* or to return to its normal position resting on the cylinder 7. In an alternative form, the central limb is constantly energized, and current is supplied to either of the outer coils. One or more of the coils 10 is energized by the making of one or more of the corresponding contacts 1, which are actuated by the numeral keys 2, Figs. 2 and 3.

Barr & Clarke 8259/1909 Multiplier, non-decimal units

8259. Barr, M., and **Clarke, E. R.** April 6.

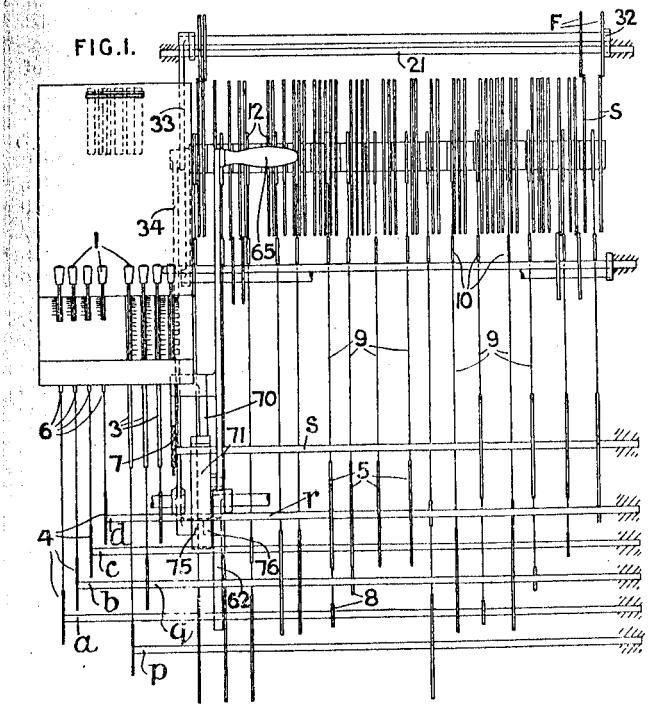

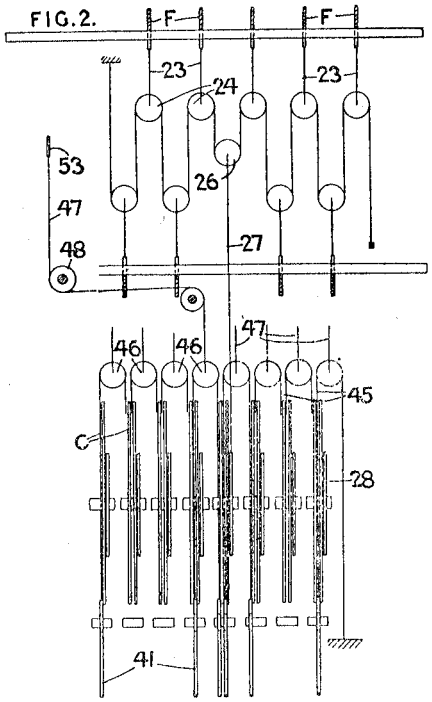

Multiplying - apparatus. —In a machine for performing, without successive action, various operations of multiplication such as between pure numbers, between a price expressed in pounds, shillings, and pence, and either a number, or another quantity such as a weight expressed in tons, cwts., &c., and also for calculating interest, percentage, and the like, levers are provided to set the multiplicand and the multiplier, movements proportional to the digits so set being transformed by a differential pulley or equivalent into the rotation of disks shaped according to the partial products, which, for the corresponding denomination, are then added together by a single linear movement and transmitted through a device to the indicating-disks, the latter device serving as a

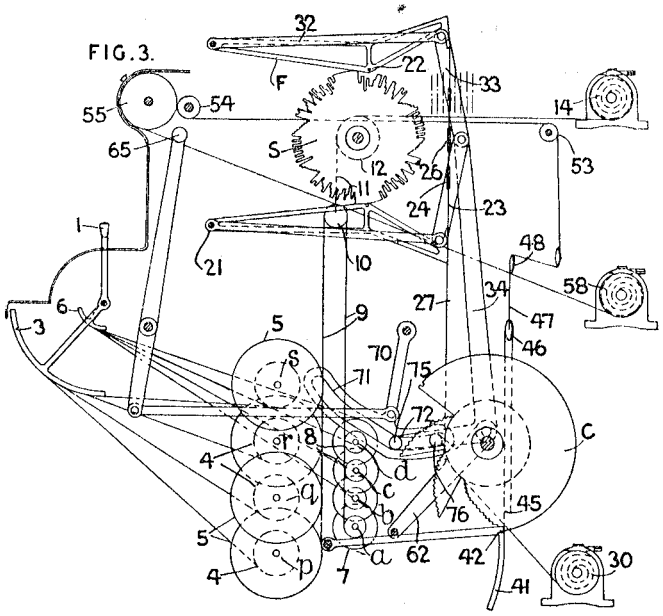

Continued.

means greatly to reduce the number of operations of carrying.

A part elevation of the machine adapted for multiplying a price by a number is shown in Figs. 1 and 2, and a part side elevation in Fig. 3. The digits of the two factors are set by the levers 1, which terminate at their other ends in circular arcs 3, 6 connected by wires to pulleys 4, 7 on the shafts *p*, *q*, *r*, *s*, *a*, *b*, *c*, *d*. On each of the shafts *p*, *q*, *r*, *s*, four pulleys 5 are mounted, arranged in sixteen pairs with four pulleys 8 on each of the shafts *a*, *b*, *c*, *d*. A wire 9 passes round a pair of pulleys and round a differential pulley 10 suspended by a wire 11 from a pulley 12 under the control of a spring pulley 14. To each of the pulleys 12 is attached a number of partial-product disks S, depending on the number of denominations affected by the class of computation to be undertaken, and provided with notches to represent the particular partial products ; the depth of these notches can be felt or measured by pins 22 on levers F, pivoted on rods 21. The levers F are held in the normal position, Fig. 3, by rods 32, toggle-bars 33, and a lever 34, the lever being rocked from the main handle 65 by the engagement of a pin 75 thereon with slots 71, 72 in the cam 70. Wires 23 are attached to the other ends of the levers F, and pass over pulleys 24, Fig. 2, and a pulley 26, which thus receives a movement depending on the sum of the movements of the pulleys 24. To this pulley a wire 27 is attached, which passes round the pulley 28 under the tension of the spring pulley 30, so that further stepped disks C may receive the movement of the corresponding pulley 26.

The disks C have two stepped parts, one for units and the other for tens, whereby a sum in excess of nine of the digits of a particular column of partial products is distributed to the denominations concerned in order that the number of operations of transfer may be greatly reduced at the indicating-disks, no transfer there being greater than unity. The depth of the notches in the disks C are felt or measured by pins 42 on the levers 41, which receive their movement from the main handle, after the disks C have been set, owing to engagement of the pin 76 with the slots 71, 72, whereby the lever 62 rises, and consequently the lever 41. The movement is transmitted to a pulley 46 by a wire 45, which passes from the tens lever of one denomination to the units lever of the next higher denomination. Each pulley 46 is suspended by a wire 47, which is led over the pulleys 48, 53, 54 to the indicating-wheels 55 under tension from the spring pulley 58. The transfer between the indicating-wheels may be of any known kind.

Barr & Clarke 7014/1910 Multiplier

7014. Barr, M., and **Clarke, E. R.** *April 6, 1909.*

Multiplying - apparatus. — In a multiplying-machine for performing without successive action various operations of multiplication, such as between mere numbers, between a price expressed in pounds, shillings, and pence, and either a number or another quantity such as a weight expressed in tons, cwts., &c., and also for calculating interest, percentage, &c., levers are provided to set the multiplicand and the multiplier, movements proportional to the digits so set being transformed by wires and a differential pulley or equivalent into the rotation of disks shaped according to the partial products, which, for the corresponding denomination, are then added together by a single linear movement and are transmitted to the numeral disks by other wires and a mechanism serving to reduce greatly the number of transfer operations. A part-elevation of the machine adapted for multiplying a price by a number is shown in Figs. 1 and 2, and a part side elevation in Fig. 3. The digits of the two factors are set by the levers 1, which terminate at their other ends in circular arcs 3, 6 connected by wires to pulleys 4, 7 on the shafts *p, q, r, s, a, b, c, d.* On each of the shafts *p, q, r, s* four pulleys 5 are mounted arranged in sixteen pairs with four pulleys 8 on each of the shafts *a, b, c, d.* A wire 9 passes round a pair of pulleys and round a differential pulley 10 suspended by a wire 11 from a pulley 12 under the control of a spring pulley 14. To each of the pulleys 12 is attached a number of partial product disks S, depending on the number of denominations affected by the class of computation to be undertaken

FIG. 1.

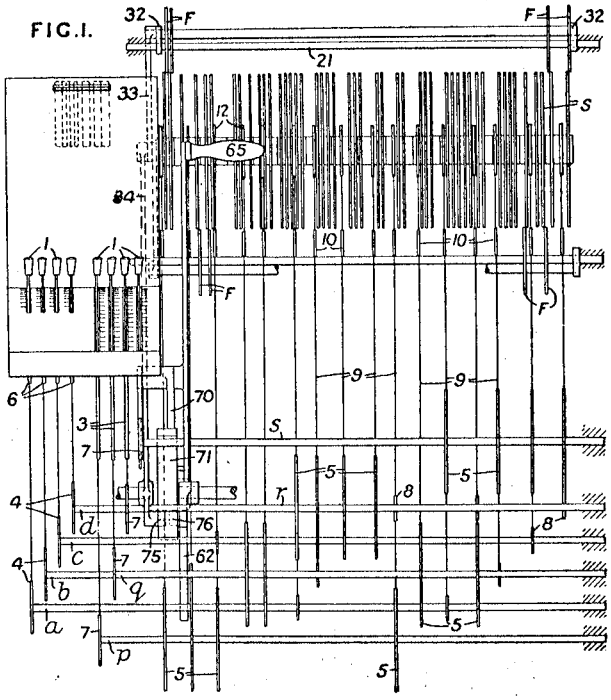

FIG. 3.

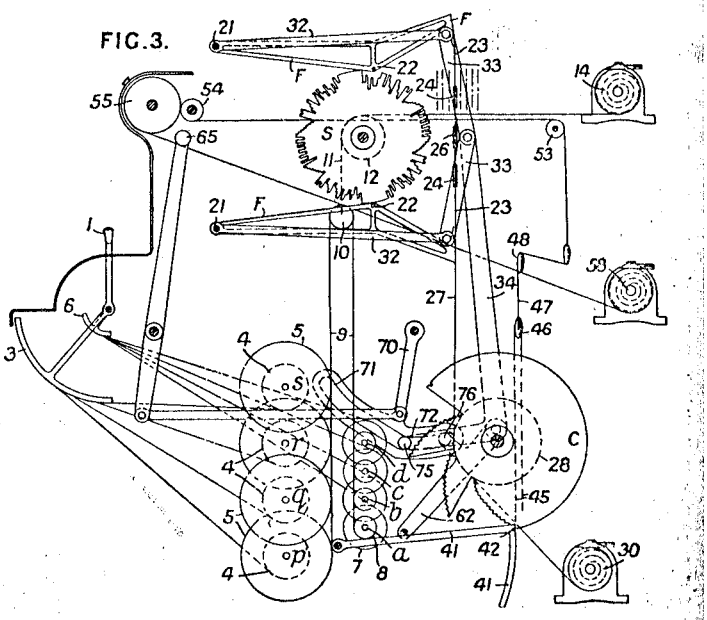

Cont

and provided with notches to represent the particular partial products; the depth of the notches can be felt or measured by pins 22 on levers F pivoted on rods 21. The levers F are held in the normal position, Fig. 3, by rods 32, toggle bars 33, and a lever 34; this lever is rocked from the main handle 65 by the engagement of a pin 75 thereon with slots 71, 72 in the cam-lever 70. To the free ends of the levers F, wires 23 are attached and pass over pulleys 24, Fig. 2, and a pulley 26 which thus receives a movement depending on the sum of the movements of the pulleys 24. To this pulley a wire 27 is attached, which passes round the pulley 28 under the tension of the spring pulley 30, so that further stepped disks C may receive the movement of the corresponding pulley 26. The disks C have two stepped parts, one for units and the other for tens, whereby a sum in excess of nine of the digits of a particular column of partial products is distributed to the denominations concerned, in order that the number of operations of transfer may be greatly reduced at the numeral disks, no transfer there being greater than unity. The depth of the notches in the disks C is felt or measured by pins 42 on the levers 41, which receive their movement from the main handle after the disks C have been set owing to engagement of the pin 76 with the slots 71, 72, whereby the lever 62 rises,

FIG.2.

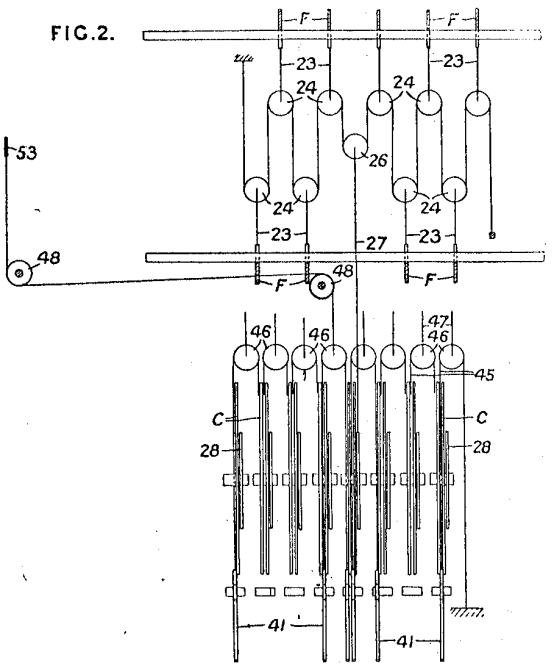

and consequently the lever 41. The movement is transmitted to a pulley 46 by a wire 45, which passes from the tens lever of one denomination to the units lever of the next higher denomination. Each pulley 46 is suspended by a wire 47 which is led over the pulleys 48, 53, 54 to the numeral wheels 55 under tension from the spring pulley 58. The transfer between the numeral wheels may be of any known kind.

Barr & Stroud 5182/1912 Gunnery computing scales

5182. Barr, A., and **Stroud, W.** March 1.

FIG. 3.

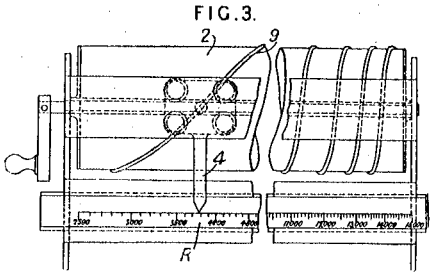

Computing-scales for gunnery calculations.—Relates to means for introducing corrections for muzzle velocity and various "errors of day" into the range-setting gearing, and consists principally in the calibration of the range-scale in such manner that the same scale serves for all muzzle-velocity variations of the gun, the correction for muzzle-velocity being made by a definite displacement of the range scale pointer from its position for normal muzzle-velocity, which displacement remains constant at all ranges. Temperature, tenuity, wind, and rate-of-change-of-range corrections are made by further relative displacements of the range-scale and pointer. The correcting-gear for such corrections, for example, rate of change of range, as are dependent upon the range, is connected with the sight-elevating gear so that the correction is progressively applied. Two or more corrections may be added by differential gearing in known manner. The range-scale may be replaced by a cam-groove or spiral rib on a drum, which drum may be rotated step-by-step from a distant fire-control station. An index is moved by the cam relatively to a spiral line on a second drum driven by the sight-elevating gear. The sight is correctly elevated when coincidence between the index and line is established in the manner described in Specification 13,306/07, [*Class* 92, Ordnance &c.]. In this construction, the corrections are divided between the two drums, gearing being provided for effecting axial displacements of both drums. In the construction shown in Fig. 3, a spiral-rib cam 9 is formed on a drum 2 connected to the sight-elevating gear, and moves an index 4 over a range-scale R calibrated in the manner set forth above, when the drum is rotated, by hand or by a step-by-step receiver controlled from a distant transmitter, to set the sights. The corrections are made by a relative displacement between the drum and scale.

Barr & Stroud 4651/1915 Gun sight correction Prop calc

4651. Barr & Stroud, Barr, A., and **Stroud, W.** March 25.

Computing gun-sighting corrections; proportional calculators.—Relates to the determination of the lead to be put on a gun when aiming at a moving target, and consists in a device for effecting mechanically the multiplication of angular velocity by range to determine the relative speed of target, whence the lead to be put on the gun may be ascertained. The device

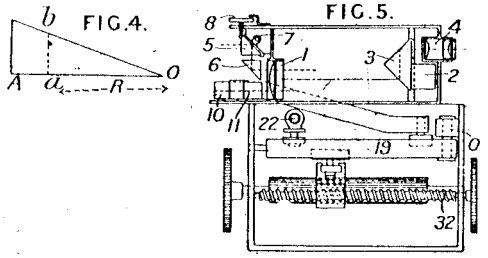

FIG. 4.

FIG. 5.

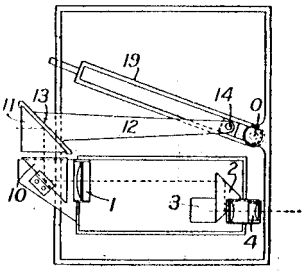

FIG. 6.

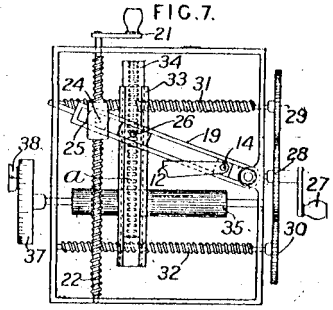

FIG. 7.

comprises essentially members arranged to produce a right angled triangulation as shown diagrammatically in Fig. 4, the base A, O, being graduated for ranges so that the height of the perpendicular such as *a b* at a range R may be arranged to indicate the product Ra which constitutes the resultant velocity of target. The device may be used in combination with a special method of sighting, which consists in firing a preliminary shot from a subsidiary gun aimed direct at the target without any deflection correction, not with the intention of hitting the target, but to give a splash, smoke, or other indication at an intermediate point in the line of sight at a certain time interval after firing. An observation may be made of the displacement of the target relatively to the splash or other indication, and the relative an-

Barr & Stroud 133974 of 1917 Gunnery calculator with gears

133,974. Barr & Stroud, Barr, A., and **Stroud, W.** Aug. 22, 1917.

Logarithmic calculators; gunnery calculators.—Relates to epicyclic gearing for use in converting motion according to one law or scale into motion according to another law or scale, especially applicable for converting motion according to a uniform scale of ranges into that of the working head of a constant-base range-finder, or into a logarithmic scale, or into a scale of gun-sight elevations. One member of an epicyclic gear is driven according to one law, that member is geared to a second member through an appropriate variable-speed device, and the third member moves according to the second law, the first two members being so rotated as to tend to drive the third member in opposite directions so that the speed of the third member may pass through zero. In a modification, the driving-member of an auxiliary epicyclic gear employed to drive the first and second elements of the main gear is arranged to move according to the first law. The bevel-wheel 1 or 3, Fig. 2, moves according to one law and the wheels carry spur-wheels 8, 9 geared together by wheels 14, 11, a wheel 12 on a stationary spindle, a wheel 13, and spiral toothed-wheels 15, 16, so varying the speed of the wheel 3 or 1 that the shaft 10 carrying the planet-wheel 2 is driven at a speed corresponding to the second law. The wheels 8, 9 are driven by wheels 6, 7, one driving through an idler 4, on bevel-wheels

151

Barr, Bell & Beeton 25018/1910 Multiply with balls and compressed air

25,018. **Barr, M., Bell, R. A.,** and **Beeton, H. R.** Oct. 27.

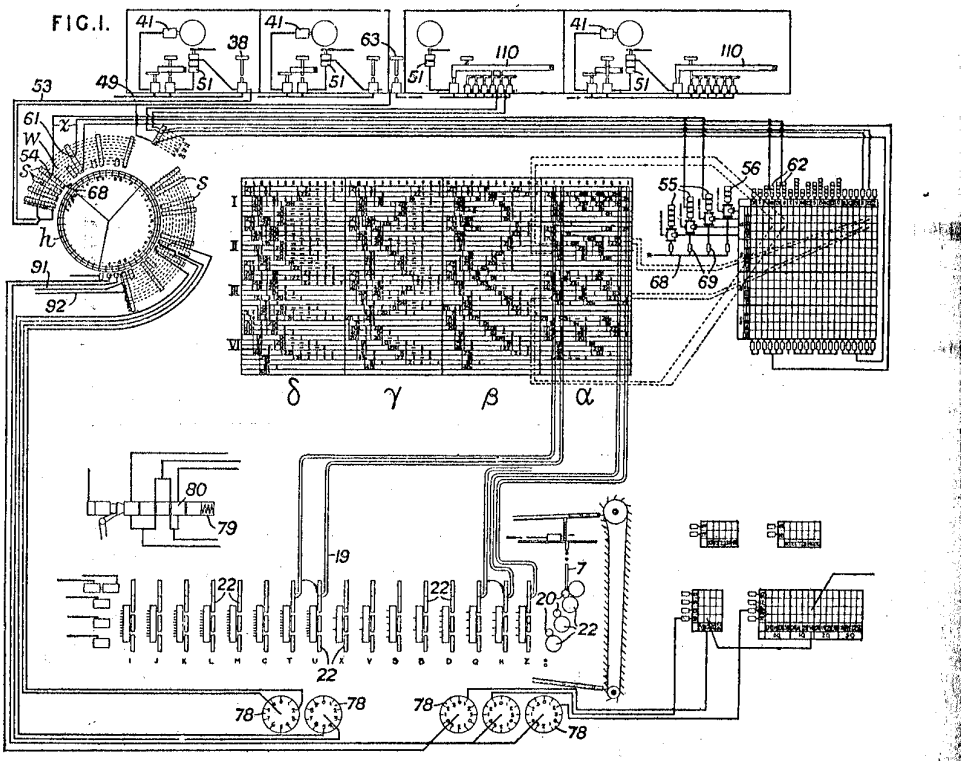

Multiplying and dividing apparatus.—A computing-machine for performing various operations, such as multiplication, conversion of foreign measures and money into the English equivalent, &c. consists in an attachment to a typewriter arranged to multiply &c. automatically by the summation of the partial products involved. All the partial products are predetermined and represented in the machine by grouped numbers of balls arranged in such a manner that, on typing given item and rate values, the partial product is immediately found in the machine; the balls are released from a hopper by means of a device called a "co-ordinator," and are advanced to actuate a counting-mechanism. A diagrammatic representation of the machine is shown in Fig. 1. When a numeral key 38 is depressed, compressed air is admitted by a pipe 49 to a printing-cylinder 51, whereupon the numeral corresponding to the

Cont.

key depressed is printed. The printing-cylinders comprise short pistons 103, Fig. 15, which, when air is admitted, raise rods 104 to actuate the type-levers. The air is stored in chambers 106 provided with valves 107 adapted to be operated when a key is depressed. In the case of fractions, a combination of key-levers 110 is employed, whereby it is only necessary to

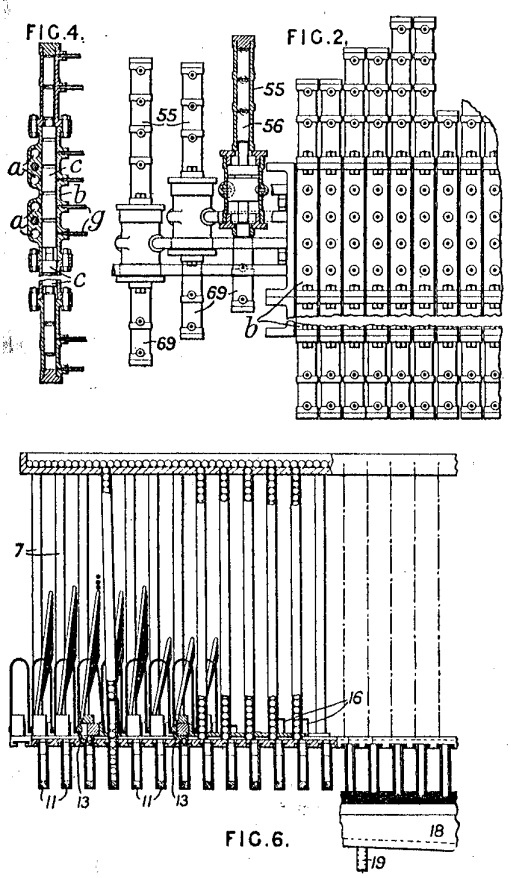

FIG.6.

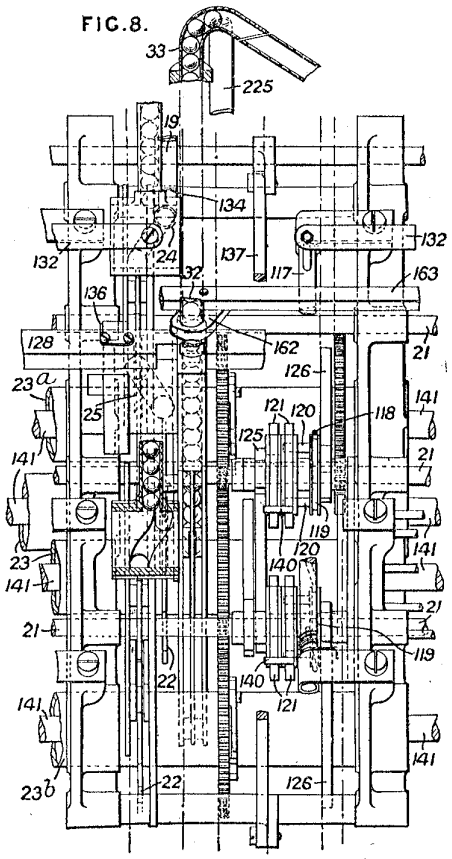

depress one key to operate the particular levers for that fraction. In modifications of the apparatus, the partial products may be found by means of rods and sliding pieces, or by means of electrical contacts, and the objects delivered thereby may be counted by weighing or measuring a column of such objects.

Selecting denomination.—Simultaneously with the depression of a key 38, air passes by way of a pipe 53 to the corresponding row of pipes *w*; the various rows surround a denomination-selector, consisting of a chamber *h*, Fig. 15, within which is a rotary arm *i* mounted on a shaft *k*, controlled by the typewriter carriage. The rotary arm has a central bore communicating with a supply-pipe *r*, and as the arm rotates, a series of apertures *q* are exposed in turn, and the air is admitted to the corresponding tubes *s*. Each tube contains a grooved rod *t*, and is provided with other tubes *v* leading to the rows of pipes *w*, and also with a second series of tubes *x* leading to the pipes *z*. The row corresponding to the key depressed only is supplied with air, and if the carriage is in the units position, air passes through the tubes *w v* to the aperture 54, Fig. 1. The air passes along the pipes *z* to the valves or relay apparatus 55, 56, which admit it to the tunnels *a* of the co-ordinator adapted to obtain the partial product. Only four tunnels are required, as the nine digits for the items are made up by the combination of two or more tunnels. After the item has been typed, the rate is set by depression of the proper numeral-keys when the carriage is in the assigned positions. As shown in Fig. 1, the carriage is in the units of pounds position, wherein air passes to the slides of the co-ordinator indicated at 62. The co-ordinator, Figs. 2 and 4, consists of a series of tunnels *a* and a series of slides *b*, in which are located rods C provided with grooves such that when a rod is moved, the

More text and drawings omitted

Barron & Harding 6050/1889 Steam engine indicator

6050. Barron, T. G., and **Harding, J. C.** April 9. *Drawings to Specification.*

Calculating-apparatus; steam-engine indicators.—Consists of a strip graduated to read the mean length of a series of ordinates, the sum of the ordinates being found by means of a courser. It is chiefly useful with the diagrams of steam-engine indicators. There may be added a slide to give values, such as horse-power, depending on the means of ordinates.

Bartels J L 2368/1907 ruler with slide

2368. Rulers. BARTELS, J. L., 1331, West [illegible] Street, Chicago, U.S.A. Jan. 30.

FIG. 1.

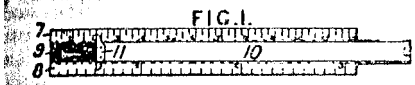

An indicator 11, having arms projecting on both [illegible] to facilitate the comparison of different [illegible] 7, 8, is fitted to the slide 10 working in a [illegible] 9.

Bathurst A A 128811 of 1918 Trig calc

128,811. Bathurst, A. A. Sept. 25, 1918.

FIG.1.

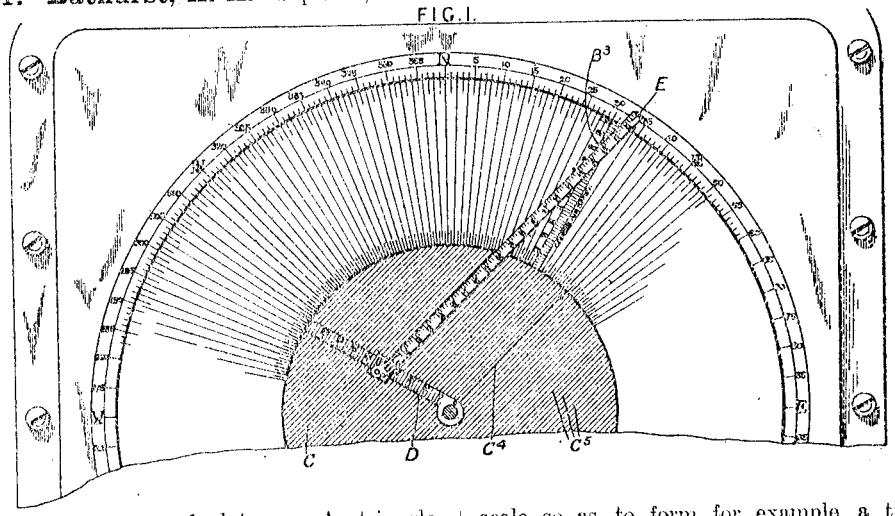

Plane-trigonometry calculators. — A triangle-solving device for navigation, aviation, &c. comprises a direction line C^4 and scales B^3, D, all of which may be rotated independently about the centre of a graduated circle, which coincides with the zeros of these scales. A third scale E has its zero pivoted over the edge of scale D and is slidable upon this scale so as to form for example a triangle o velocities. Scale E and direction line C^4 ar arranged parallel to one another, for instance b the assistance of parallel lines C^5 drawn upon disk C, which may be transparent so that th extension of scale B^3, not shown in the drawing may be seen. Scale B^3 may be arranged upon a arm.

Baum M 27413/1911 Small adder

27,413. Baum, M. Dec. 7, 1910, [*Convention date*].

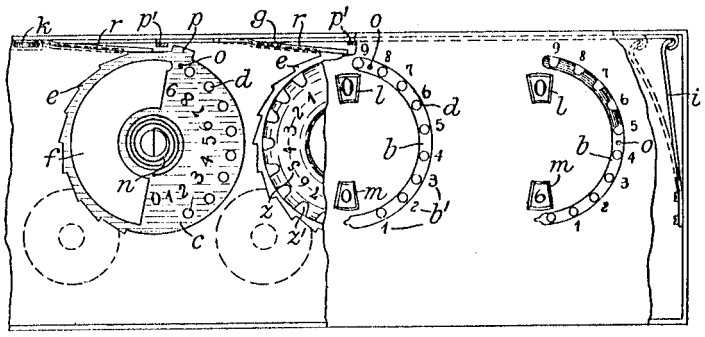

Adding and subtracting apparatus; displaying items.—In machines having a number of totalizing-disks arranged on parallel spindles side by side in a flat casing and adapted to be set differentially directly by a style, indicating disks are also positioned by the style to display items. The totalizing-disks *z* show numerals through the total apertures *l*, and are set by the engagement of a style with their peripheral apertures z^1, the style being inserted in the circular slot *b* adjacent to the fixed setting-scale b^1 and brought down to the lower end of the slot. Co-axial with and above the total disks are the item-indicating disks *c*, bearing numerals adapted to show through item apertures *m* and having setting apertures *d* through

304

© B O B Williams Printed22/11/2023 CalcPatents Ed. 1.doc

Baxandall D 105371 of 1916 Spherical Trig

105,371. Baxandall, D. April 5, 1916.

Spherical-trigonometry calculators.—Apparatus for use in directing the line of sight of any instrument to the North celestial pole comprises a prism or combination of reflectors or other equivalent optical apparatus adapted to produce a deviation that is equal to the polar distance of Polaris from the north celestial pole, together with a device for observing a circumpolar star selected as an index, the observation device being set or adjustable in relation to the principal plane at an angle equal to the difference between the right ascensions of Polaris and the index-star. The index-star observation device consisting of a radius arm *c*, Fig. 1, is pivotally mounted upon a tube *b*, which carries the deviation-producing device. In the construction shown in Figs. 1 and 2 the deviation-producing device consists of a prism *a* mounted in a tube *b* provided with sighting-means, the observational device to be set upon the index star consists of a radius arm *c* capable of being turned about the tube *b*. A pivoted arm *d* on the radius arm *c* and the arm *c* itself may be provided with luminous parts to assist in alining the arm upon the index star. In order to enable the arm to be set the tube *b* is fixed in the centre of a dial *g* having upon it a circumpolar star-map *h*, the right ascensions of prominent stars being marked on an hour-circle *j*, and upon the dial is a level *s* whereby, when the selected circumpolar star and Polaris are in the observed positions, it may be ensured that the axis of the tube *b* is directed to the pole and the plane of the dial is that of the equator. A scale *f* giving the azimuths of Polaris for different latitudes may be provided, and is read according to an adjustable index-member *u*, *t*, *v*, giving the hour-angle of Polaris for the local sidereal time.

FIG. 2.

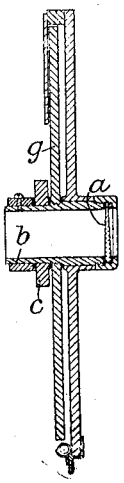

FIG. 1.

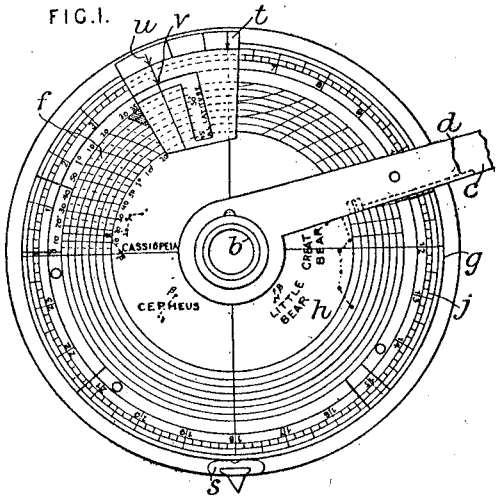

© B O B Williams Printed22/11/2023 CalcPatents Ed. 1.doc

Bayldon & Armstrong 24761/1898 Navigation device

24,761. Bayldon, F. J., and **Armstrong, A. H.** Nov. 23.

FIG. 1.

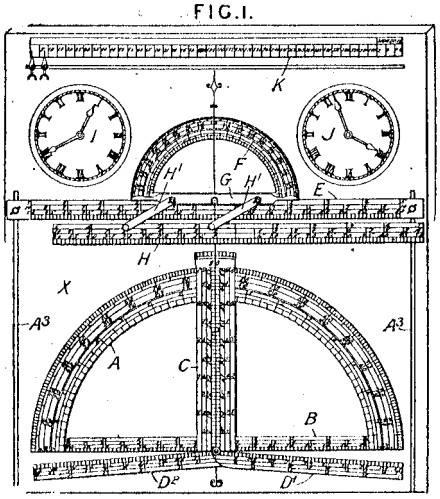

Calculating-apparatus.—The apparatus is more especially for solving the trigonometric problems involved in determining a ship's bearings and course, the distance abeam it will pass from a given point, &c., but it is applicable to other calculations involving the solution of triangles and quadrilaterals, such, for example, as the determination of strains and stresses by graphic statics. The base-board X of the apparatus is marked with a protractor A having a base B, perpendicular C, and two radial pointers D^1, D^2. A cross-bar E, parallel to the base, slides in dovetailed guides A^3, and carries a second protractor F upon which may be adjusted a double-ended pointer G. A rule H is linked to the pointer by bars H^1, H^1, so as to remain always parallel with it. All the linear scales are graduated alike, and set-screws are provided to lock the bars and pointers in any desired positions. The arrangement described provides four relatively-adjustable elements, and so enables triangles or quadrilaterals to be solved. I, J are clock faces with adjustable hands, and K a scale with adjustable pointers for registering any data required to be remembered.

Beals E V 8916/1905 Area measure & print

8916. Beals, E. V. May 6, 1904, [*date applied for under Patents Act, 1901*].

Calculating-apparatus.—A machine for measuring areas is provided with means for printing the measure of the area upon any part of the surface measured, the device being shown in connexion with a machine of the Sawyer type for measuring hides, skins, or leather. Numbering-wheels are contained in a separate case 52, having an extensible and pivotal connexion with a bracket 65 on the measuring-machine. The numbering-wheels are connected through universal joints, an extensible link 40, and bevel gear to a spindle 16, Fig. 5, mounted in a casing 10 behind the indicating-dial *a*. The spindle 16 passes through a disk 15 which is kept from rotating and contains a series of spring pins 14. These

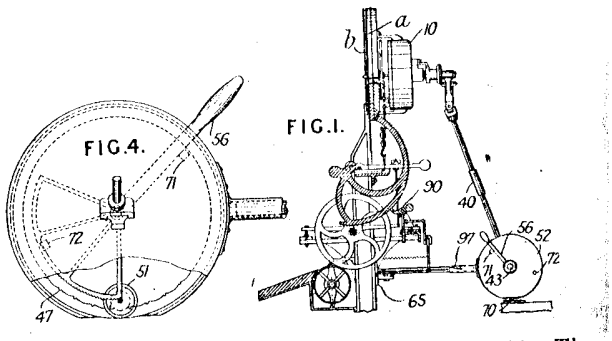

Beaucourt E 17401/1912 Adder multi disk

17,401. Beaucourt, E. July 26.

Adding-apparatus; zeroizing-mechanism.—Relates to machines of the kind in which a manually-operated unit setting disk operates higher wheels, and in which the highest wheel is returned to zero separately from the lower wheels. The setting-wheel T has ten apertures to correspond with numbered spaces and one blank on a fixed plate *b*, and is attached to a spindle with a pinion S for driving the unit-indicating disk H. The spindle has also a finger U for operating the tens wheel. The tens spindle has a finger V for operating the hundreds wheel. Zeroizing is effected by means of the protruding milled edge *a* of the highest wheel and by operating the lower wheels separately.

FIG. 1.

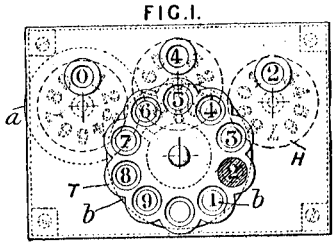

FIG. 2.

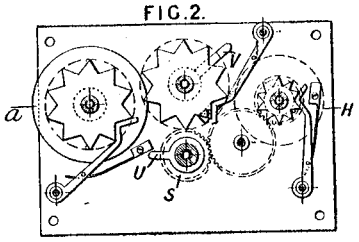

599 387 2 B 2

Beaucourt H 2441/1881 Adder

2441. Lake, H. H., [*Beaucourt, H.*]. June 2.

Calculating-apparatus.—The wheel B, having 100 teeth and the numbers 0 to 99 marked thereon, moves the hundreds disc E one tooth at every complete revolution by the projection G, which comes in contact with a tooth of a pinion on the same spindle, the disc E being prevented from moving too far by the spring R. The numbers on the discs are visible successively through openings in the face of the apparatus at U, H. The pinion C of the perforated disc D gears with the wheel B and is marked with the numbers 1 to 9. For addition the disc D is moved from 9 to the first figure to be added, when such figure will be shown by the wheel B, at the opening U ; then the disc D is moved again to the next number to be added when the total will be shown at U, and so on up to

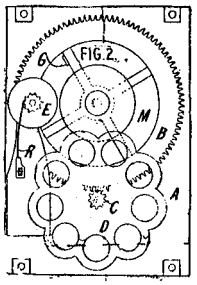

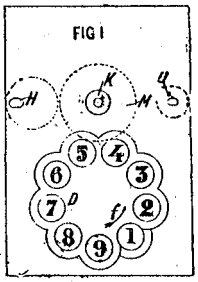

99, when the hundred will be shown at H on the disc E. The disc D may be caused to return to zero by an escapement spring and, to more easily bring it back, a stud moving in a groove will allow the india-rubber disc M to bear against D. The apparatus may be used for subtraction by reversing the motion of the disc D.

Bec V-M 5855/1911 Add Subtract Circular stylus

5855. Bec, V.-M., [*known as* Bec, E.]. March 8, 1910, [*Convention date*]. *Void.* [*Published under Section 91 of the Act.*]

Adding and subtracting apparatus.—Circular-disk style set and operated apparatus, Fig. 8, is provided with two setting-scales for addition and subtraction respectively, the apertures for engagement of the style appearing through a semicircular opening q and the result figures through apertures t, t^1.

Transfer mechanism.—Fig. 10 shows the gearing and single-tooth arrangements for effecting the transfer between the consecutive numeral-disk spindles x, x^1, x^2, together with the ratchet clutches s^1, s^{11} which admit of actuation being effected at any denomination without interference from the locking action of the transfer parts from the next lower denomination.

Tabular and logarithmic calculators.—Mounted upon the same frame as the above-described apparatus are a number of rotatable disks a, a_1 . . . a_6, Figs. 1 and 2, bearing tables of figures, of which the three uppermost disks are

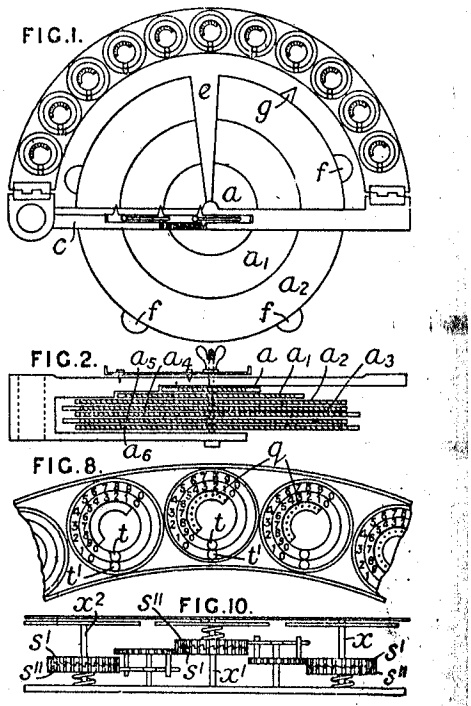

of increasing size as shown, while all disks are provided with a segmental gap c whereby the figures upon lower disks may be inspected. Tabs f are marked according to the table upon the disks, and resetting-fingers g are provided for restoring the disks to the position shown in Fig. 1. In the apparatus described, the disks bear tables for products of numbers, roots, and powers of numbers, natural sines, cosines, tangents, and cotangents, logarithms of numbers, circumferences and areas of circles, ratios of arcs to chords and of segments to square chords, local time at various places, and converses of numbers. The disks all move beneath the cross-bar c, which has a number of branches and edges bearing the argument scales for the various tables and having sliding markers for use therewith. In a modified and simpler form, each table is mounted upon a rectangular board and moves transversely to and beneath a bar carrying the argument scales and markers.

© B O loc

Bechtolsheim Freiherr von 1217/1910 Add Subtract

1217. Bechtolsheim, Max, **Freiherr von.** Nov. 29, 1909, [*Convention date*]. [*Addition to* 30,600/09.]

Adding and subtracting apparatus; transfer mechanism. — A calculating-apparatus of the type described in the parent Specification is adapted for addition and subtraction, and consists of a series of drums $a^1 \ldots a^4$, mounted loosely on a spindle k, with disks b fixed to the

99 G 2

spindle between them so that when the drums are free to rotate they do so by friction; the drums are pressed together by a spring s. Retaining-springs d, which normally prevent rotation of the drums, are arranged to be disengaged by hand-operated slides p, which allow the drums to be locked or released at will depending on the denomination or denominations to be actuated. When a transfer is to be effected, the retaining-spring of the higher drum is disengaged automatically by an abutment f on the lower drum. A second series of retaining-springs d^1 and slides q are used when subtraction is to be performed.

FIG.3.

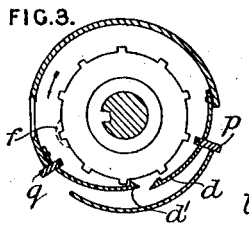

FIG.1.

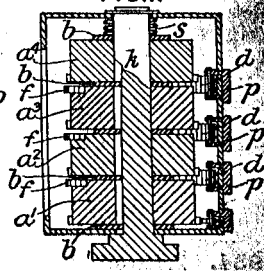

Beck G 1274/1780 Surveying & calculating device abr txt

A.D. 1780, December 16.—N° 1274.

BECK, GEORGE.—"A compleat apparatus for surveying and "planning in general by land and sea."

1st. "A portable horizon, consisting of a polished polygon, "having each of its polished planes suspended perpendicularly."

2nd. A "goniameter or instrument for taking angles."—On the centre of the instrument are two mirrors, one fixed and the other attached to the index, and in the same plane as the fixed mirror when the index is at 0°. A sight near the limb is used for taking observations by one reflection only. Another sight, near the centre, is used when observations are made by double reflection by means of a horizon glass on the middle bar of the instrument. Inclined mirrors, "moving on an axis at right angles to the axis "of vision," "reduce objects to the same horizontal plane," to ascertain horizontal angles.

3rd. A "sectoral protractor."—Two legs work upon a centre, and a "traverse" works upon another centre. The edges of the legs are divided to solve trigonometrical problems. A ruler is also used to stretch a fine thread in "protracting stasimetric surveys."

4th. "The selnographor."—This instrument reduces or enlarges plans, by means of a tube revolving on a centre and carrying the tracing and marking points.

5th. "The catoptric plain table."—"A joint rule" carries two mirrors, one upon each leg near the joint; pins are fixed at the extremities of the legs, and angles are taken by means of their images in the mirrors. Additions and a modification are also set forth.

6th. "The universal sliding scale."—This has "all the lines "usually put on scales" "laid quite round the sides and rounded "ends"; "by means of bands carrying indexes," each line has "all the properties of circles of proportion."

[Printed, 6*d*. Drawings. See Rolls Chapel Reports, 6th Report, p. 165.]

Beck G 1274/1780 Surveying & calculating device Part of full patent

No. 5, a representation of the universal sliding scale. This having all the lines usually put on scales or sliding rules, or any other lines, are laid quite round the sides and rounded ends, so that each returning into itself, has, by means of bands carrying indexes, all the properties of circles of proportion, but is vastly

Beck's Apparatus for Surveying and Planning on Land and Sea.

more portable and convenient for a surveyor, as it performs all arithmetical and trigonometrical problems with much less trouble, and without compasses.

Nº 5.

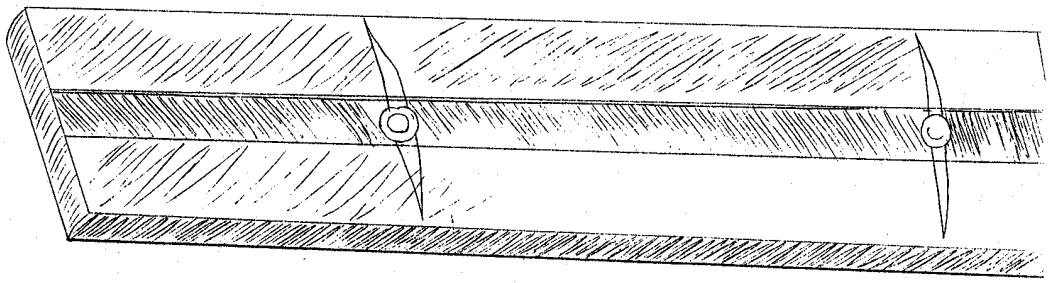

Beehler W H 10916/1894 Re compass error

10,916. Beehler, W. H. June 5.

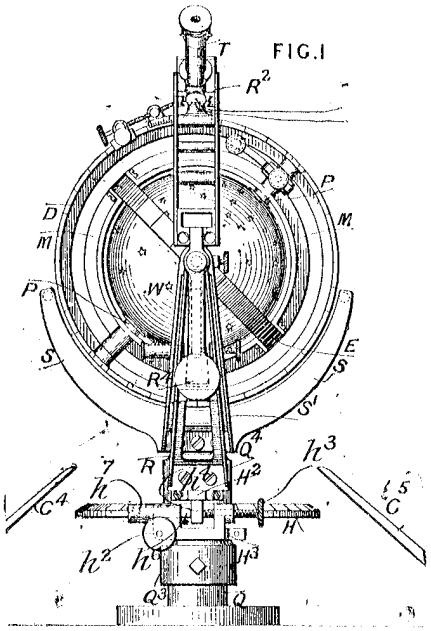

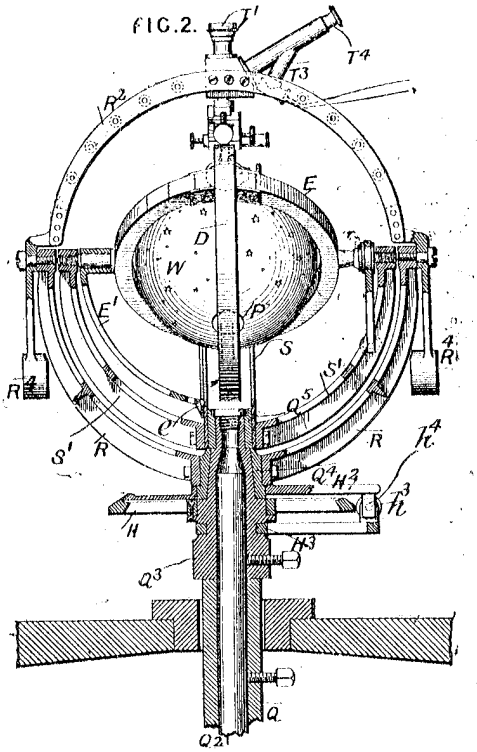

Calculating apparatus.—The apparatus is for observations of the sun, stars, &c., for solving problem in navigation, surveying, &c., with special reference to determining compass error. The part of th instrument shown in Figs. 1 and 2 is carried by the column Q, which is part of a weighted bowl-shape float connected to the bottom of a bowl containing mercury by a ball and socket joint. This bow which is also weighted, floats in mercury contained in an outer gimballed bowl, each float being provide with horizontal bilge keels to lessen vibration. The spindle Q^2, which can be clamped to Q, is thu maintained vertical and makes the horizon circle H practically an artificial horizon. C^4, C^5 are pointe showing ship's head. Above the sleeve Q^3 which carries the horizon circle are revoluble sleeves Q^4, Q the former carrying quadrantal brackets R, R, the latter two pairs of brackets S, S, S^1, S^1. To R, R pivoted the semicircular support R^2 for the telescope T, and counterweights R^4, R^4 are provided t balance the telescope. The brackets S, S are marked for latitude, and upon S^1, S^1 is pivoted th equatorial circle E connected with a pointer E^1 and vernier *e* for reading on the latitude circle. M is meridian circle rigidly attached to the equatorial at right angles, and D a declination circle, the pol P, P of the stellar globe W being carried by these circles. All the parts have coarse and fine adjus ments, of which that for the brackets S, S relatively to the horizon circle is typical. This consists of a arm H^2 on the sleeve Q^4 and an arm H^3 revolving freely round Q^3 but capable of being fixed to it by set screw h^2 for rough adjustment. The fine adjustment is then made by the screw h^3 acting on th lug h^4 projecting from H^2 against the pressure of a spring piston h^6 in the cylinder h^7. The variou parts with relative movement are graduated and have vernier movements. T^1 is the object and T^4 th eye end of the telescope T, a mirror being employed to change the direction of the rays. The cro hairs are specially arranged and are illuminated by a small electric lamp at the end of the branc tube T^3.

Beher O 13538/1890 Adding machine

13,538. Beher, O. Aug. 28.

Calculating - apparatus. — Relates to arithmometers. A pin-wheel D, D¹ for adding up to a hundred is advanced by a spring barrel G when released by key levers K¹ pivoted at J, and is read through a window C. The complete hundreds are counted on a second wheel *x* with spring *z*¹. The pin-wheel is released from the pawl H, which prevents its rotation, by a lever P pivoted at Q, which is operated from an oscillating frame T under the keys. The rotation is limited by means of pins N at the ends of the keys and a finger R, which the lever P thrusts between the pins F so that it is moved with the wheel till stopped by the pin N on the depressed key. The keys are restored by springs beneath them, the lever P by a spring P¹, and the finger R by a spring R¹. The wheel *x* is released by a lever *b*, *c*, *d*, which is brought into the position *b*¹ shown in dotted lines by a pin on the wheel D, and when the pin is disengaged it is restored by a spring *f*¹. The end *d* is split into two tongues, one above and to the side of the other, so that when a pin of the wheel *x* escapes from the first it is stopped by the second. The wheels are freed for returning to zero by a push-rod *g*, which shifts back the pawl H, and turns up the lever *b* clear of the pins of the wheel *x*.

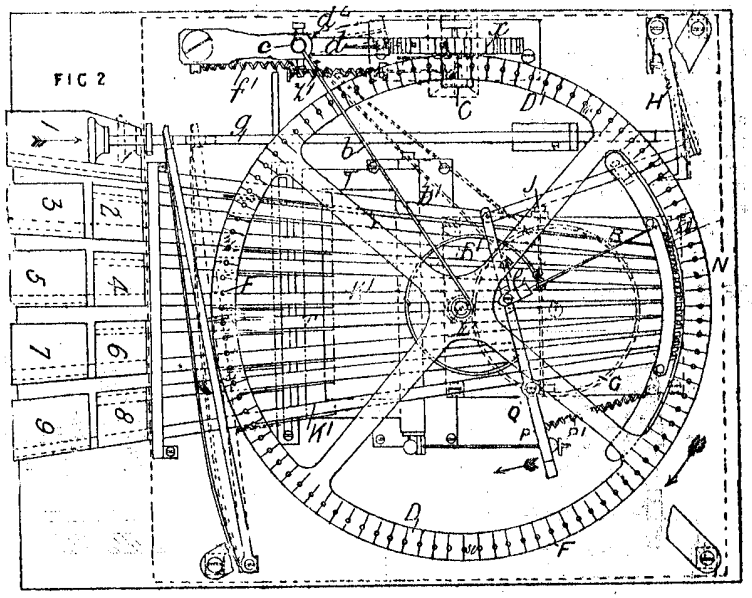

Behr B C M 3402/1908 Chain adder

3402. Behr, B. C. M. Feb. 14.

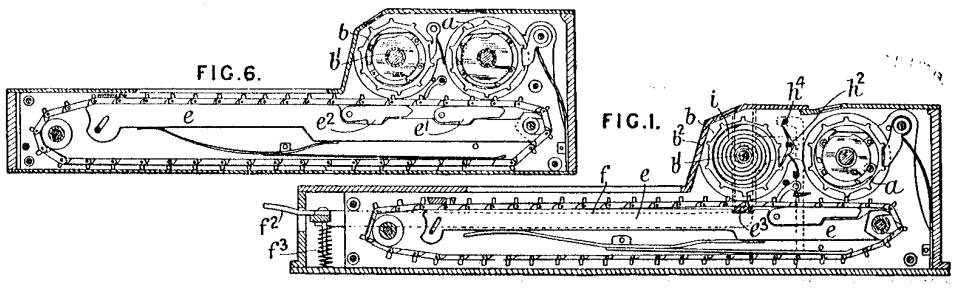

Calculating-apparatus.—In multiple-denomination adding-machines having differential setting-elements in the form of chains, as described in Specification No. 10,237, A.D. 1899, an additional set of numeral-wheels is provided for indicating either items or sub-totals. In the form shown in Fig. 1, the chains are normally out of engagement with the usual totalizing-wheels *a*, but engage with the additional wheels *b*, for which purpose they pass over a cross-bar e^3 resting upon levers *e* which lift the chains up to the totalizing-wheels when an item is being registered. The spindle b^1 of the item-wheels is carried, together with the aperture hood b^2 over them, upon side levers *f*, which are controlled in front by springs f^3 and a key f^2. Depression of the key lifts the wheels out of engagement with the chains, and carries the upward arms of their detents h^2 against a fixed cross-rod h^4, whereby they are displaced so that the internal springs *i* may return the wheels to zero position. In the modification shown in Fig. 6, the additional wheels are normally out of engagement with the chains, lifting-arms e^1, e^2 being provided for automatically engaging the chains with the total and sub-total wheels respectively.

710

Belshaw R 3281/1896 Slide rule for horizontal cask

3281. Belshaw, R. Feb. 13.

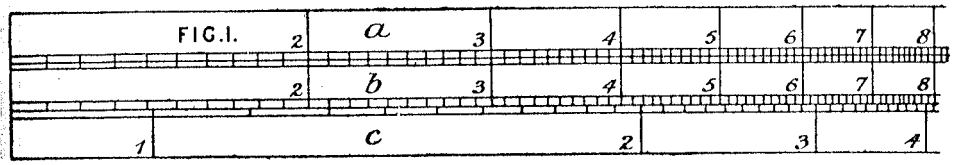

Slide rules.—The apparatus is for determining the quantity of liquid in a cask lying horizontally. *b* is the slide working between two fixed parts *a* and *c*, all the parts being graduated both front and back. At the front *a* and *b* carry logarithmic scales as shown, and *c* is marked with a scale of percentages of capacity from one per cent. At the back the slide is marked with a logarithmic scale, while the fixed parts carry a scale of percentage of capacity lower than one per cent. (for the cases when the cask is nearly empty or nearly full), and a scale of mean diameters. The mean diameter is taken as the diameter of a cylinder of the same length and the same capacity as the cask. The cask being less than half full, if the slide is set so that the number representing the "length" is coincident with unity on the fixed part, the "mean diameter" can be read off against the number on the slide representing the "content." The mean diameter on *b* is then set to unity. Half the difference between the mean and bung diameters is taken and deducted from the wet inches and the percentage of content is read off from the scale *c* opposite the result on *b*. Other details of the methods of using the rule are described.

Berggren P 13800/1903 Adder with ratchet key entry

13,800. Berggren, P. June 20.

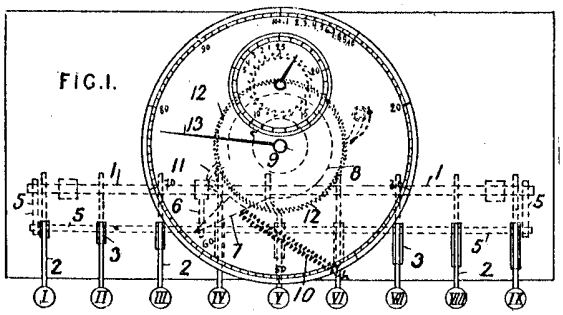

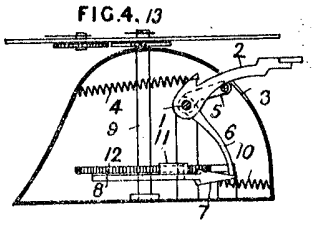

Calculating - apparatus. — The number - keys in an adding - apparatus are each capable of being depressed a different distance, so that a ratchet-wheel actuating a pointer, which moves over a dial, is rotated through distances which vary according to the key depressed. Fig. 1 shows a plan view, and Fig. 4 a sectional side elevation, of the apparatus. Each number-key 2 is normally held up by a spring 4, and rotates freely on a shaft 1, to which is fixed at the ends a frame 5. The sizes of the openings 3 in the case of the apparatus vary, and so allow the keys 2 to be depressed to various extents. A piece 6 fixed to the shaft 1 rotates with it, and on depression of a key the frame 5, and so the attached shaft 1 and piece 6 are rotated. The piece 6 bears upon a conical piece 7 fixed to a disc 8, which rotates on a vertical shaft 9, and is normally held back by a spring 10. A pawl 11 fixed to the disc 8 actuates a ratchet-wheel 12 having 100 teeth, and thereby moves a pointer 13 over a dial with 100 divisions. A second dial indicates the hundreds, the wheel which drives its pointer gearing with a single-toothed wheel, moving with the pointer 13 on the shaft 9.

Bernovits V 5570/1912 Tab calc

5570. Bernovits, V. March 17, 1911, [*Convention date*].

Tabular calculators.—An apparatus for calculating interest or similar quantities for any period of time, in which the interest tables are marked on bands passing over rollers, is provided with means whereby the rollers are axially adjusted to compensate for the different number of days in the months, and has means connected thereto to adjust bands which have marked thereon the consecutive months and the number of days in the months. The interest tables are inscribed on bands 16 passing over prismatic rollers 4 . . . 9, Fig. 2; at one end of each roller is a disk 93 which engages a cross-bar 94 having a projection 30 adapted to co-operate with a series of twelve projections 63, one series for each band, on a rotatable shaft 61. The projections 63 are of varying lengths and limit automatically the axial adjustment of the rollers. The shaft 61 is rotated by hand, and the setting thereof is permitted by displacing the bands 16, prior to the rotation of the shafts 61, by means of an eccentric disk 89 against the action of springs 73; further rotation of the eccentric brings the projections 30 against the adjusted projections 63. Longitudinal strips 20 marked with the days of the months are mounted in pairs between the bands 16 and are relatively adjustable thereto so as to be set to correspond to the setting of the bands by means of projections on a shaft 60 similar to the projections 63. The strips 20 are each attached to an adjustable rack 79. Pawls 85 mounted on a slide 82 engage the racks and thereby reciprocate them so as to adjust the strips to the desired setting or to the initial position. Connected to the shaft 61 is a shaft 96 around which passes the strips 70 having marked thereon the consecutive months. These strips are set after the strips 20 have been returned to their initial position, and at the same time a blind or shutter 72 is moved under the action of a spring 90 to cover up all the months except the first month from which the interest is to be calculated. The return of the strips 20 to the initial position, through a pin

FIG. 1.

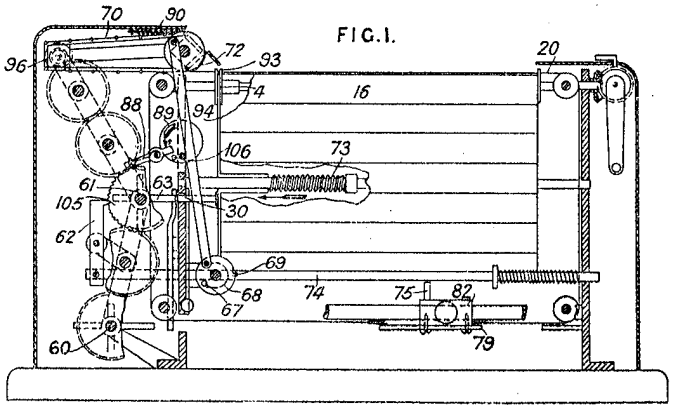

FIG. 2.

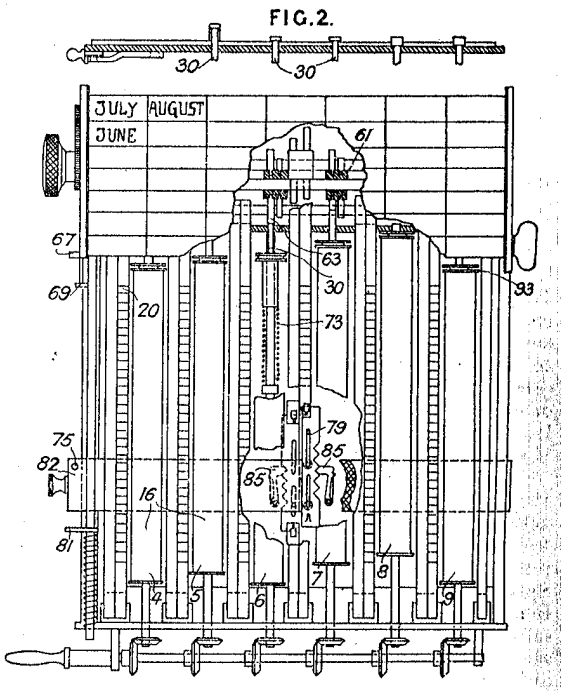

Bevan H 1597/1858 Strip multiplier

1597. Bevan, H. July 15. [*Provisional protection only.*]

Calculating-apparatus for multiplication and other operations consists of a series of strips, each strip having marked upon it two vertical rows of figures separated by a broad line. The strips are divided by horizontal divisions into groups, each group consisting of ten. "On the "head of each vertical column is a figure, and the "sum to be multiplied is composed by arranging "the vertical columns so that the figures on their "heads shall represent the said sum. The "vertical columns are thus arranged on a "surface carrying a fixed series of groups of "figures, there being the same number of groups "as in the vertical columns, the series constitnting "the fixed groups commencing at zero and rising "up to nine. A series of flaps, each being of the "breadth of one horizontal row of figures, is "turned down over the figures on the vertical "columns. In order to multiply the sum it is only "necessary to lift such of the flaps opposite the "fixed groups as represent the multiplier, the "unit figure of the multiplier being selected "from the bottom fixed group; the tens from "the group next above and so on. By adding "together the numbers disclosed the product "sought will be obtained, each (vertical) column "being bent to the right at the commencement of "each group so that the first group of one column "is over the second group of the second column "and so on."

Bevan H 2770/1 858 Calculating apparatus (Disc & rod arith multiplier)

2770. Bevan, H. Dec. 3.

Calculating-apparatus. — A series of discs, having marked round their edges the multiples from zero to nine of the several numbers which the discs represent, may be arranged in any required order on a rod. By turning the rod and adding together the numbers disclosed by an opening in an outer case, the multiples of the number represented by the arrangement of the discs may be obtained. The numbers may be arranged on flat strips to be used in the same way. Or several strips may be joined together in step fashion to form "tallies" which are arranged in order to form the number required. A series of flaps numbered in tens cover the figures on the tallies. By raising the flaps corresponding to the multiplier and adding together the numbers disclosed, the product may be obtained as before. The addition may be performed by a counting-mechanism worked by toothed wheels substituted for the numbered discs, the number of teeth corresponding to the numbers on the disc, the result being read off or printed.

Biane R 17479/1905 Bridge scorer

17,479. Biane, R. Aug. 29.

FIG. 1.

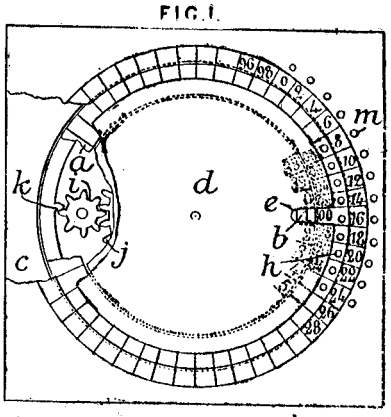

FIG. 2.

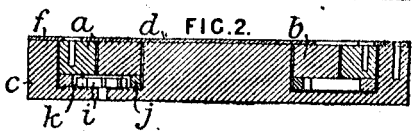

FIG. 4.

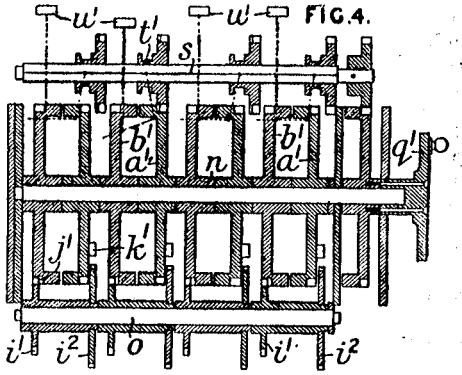

Calculating-apparatus.—The scores of bridge &c. players are registered separately, either by providing each player with a scorer as shown in Figs. 1 and 2, or by using a scorer provided with four compartments as shown in Fig. 4. The total points scored by tricks and honours are together added to or subtracted from each player's score, a separate account being kept of the score for tricks. Each scorer, Figs. 1 and 2, comprises two rings *a*, *b* which rotate in grooves in a block *c*. The ring *a* is marked with the natural numbers from 1 to 40, and the ring *b* is marked with the even numbers from 0 to 98, and a slit *e* in a cover *d*, fixed to the block *c*, enables any number up to 4000 to be scored. The ring *b* is also kept in place by a fixed

Biane & Lourau 24813/1910 Adder printer bridge scorer

24,813. **Biane, R.,** and **Lourau, V.** Nov. 4, 1909, [*Convention date*].

Adding and subtracting apparatus; printing totals.—Relates to apparatus for scoring and printing the points and results in the game of Bridge. Two rows, *e*, *f*, of raised figures on a stationary disk *c* are used to mark honours and tricks respectively, and raised figures on two rotatable washers *j*, *k* are used to mark the total result, the slot *g* in the stationary disk enabling an imprint to be taken from these figures. The record upon a sheet of paper *h* is effected by pressing an inked pad *x* against the paper resting on the raised figures, the pad sliding upon a spring blade or arm V^1, pivoted at the centre of the apparatus, with projections a^1, b^1 for shifting the paper to-and-fro. The paper is also fed step by step by a fixed projection d^1 which prevents the projection a^1 from acting for a short space. The washer *j* is carried by an inverted cup *l*, and is moved by a pin *u* on the swinging arm *v* engaging with holes *m* on the cup *l*. Opposite these holes is a fixed row of figures on the casing *a* which enables the washer *j* to be moved to the right or left to the number of points required, this number being thus added or subtracted from the total. A pin *n* connected to the cup *l* and

FIG. 1.

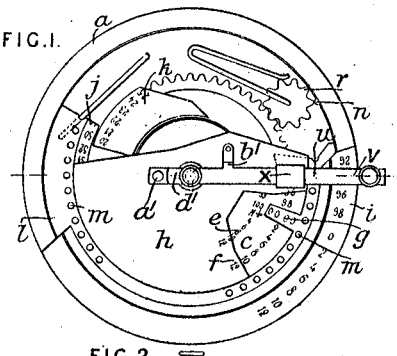

FIG. 2.

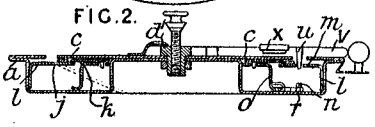

washer *j* turns the wheel *r*, and with it the washer *k*, to mark the hundreds and thousands; the washer *k* is fixed to a second inverted cup *o*.

Billeter & Bohnhorst 133682 of 1918 Logarithmic calculator

133,682. Billeter, M., and **Bohnhorst, A.** Oct, 5, 1918, [*Convention date*].

Logarithmic calculators. — Two equal logarithmic scales are subdivided into equal sections and drawn on parallel lines on the leaves of two books, one of which is stationary while the other is adjustable in a direction parallel to the stationary book. A cursor is arranged to move parallel to the lines of the books, and an auxiliary device comprising a rotatable roller and a rotatable and laterally adjustable slide or sleeve is provided for determining the section in which the result of the calculation will be found. The books 3, 4 are arranged in a box 1 and its cover 2 and each has four leaves, which can turn about their inner edges 3^1, 4^1, and another two leaves, forming the first and the last leaf of the book, and which are glued to the frames carrying the books. The lines of the stationary book 4 are made twice as long as the lines of the adjustable book 3, and the second half of the scale in each section line is repeated in the first half of the next section so that the same scale values appear in the same sections of the two books. The frame 5 carrying the book 3 is movable on guides 6 by means of a handle 14 and is provided with a rod 7 on which is slidably mounted a cursor comprising arms 8, 9 and indexes 10, 11. The lines of the books are numbered consecutively with red figures from "0" on the first leaf to "99" on the last section of the last leaf, such numbers being used to determine on what section the result of a calculation is to be found. In multiplication or division, for instance if a is the section in which the first factor or dividend appears and b is the section in which the second factor or divisor appears, then $a + b = c$ gives the section in which the result can be read. This calculation is effected by the roller 12 and the sliding and rotatable sleeves 13 as shown developed in Fig. 4; each of which is divided by ten parallel lines b, the former subdivided into twenty parts and the latter into ten parts. The numbering of the right-hand half of each line of the roller is repeated on the left-hand half of the next line, and the last graduation of each line b and the first graduation of the next line and of the line on the sleeve 13 are given the same numbers.

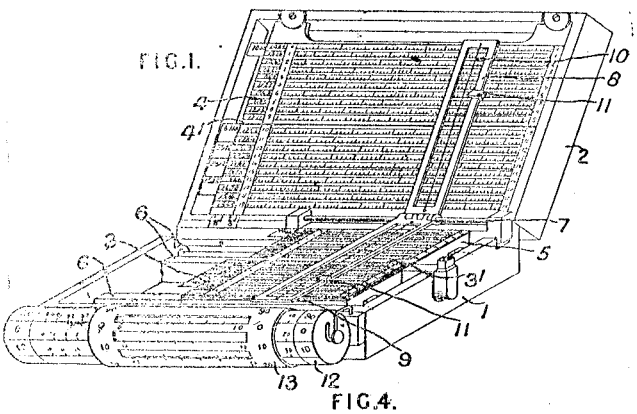

FIG.4.

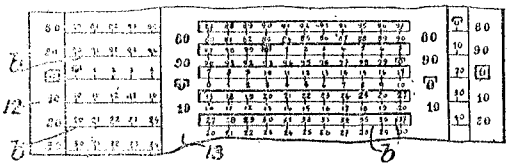

Billing N P 9070/1908 Adder

9070. Billing, N. P. April 25.

Calculating-apparatus; counting-apparatus.—The device consists of a carrier sliding on a rod A provided with a rack A^1, a spring A^2 housed in the carrier tending to return the parts to the position shown in Fig. 2. In a bracket B^3 of the carrier is mounted a spring-controlled pin C^1 carrying a casing C in which is housed the counting-mechanism, consisting of a series of concentric rings E . . . E^5 mounted on sleeves E^6 . . . E^9 carried by a pin C^3 secured to the casing. Mounted on the sleeves are pinions G . . . G^3 provided with spring pawls C^9 and adapted to engage with the rack when the casing, which is normally held out of engagement by a spring C^6, is depressed by means of a thumb-piece C^8. Transfer between the numeral disks is caused by pawls F^1, F^2, F^3 mounted in pockets E^4 in the rings and carrying pins, which engage in cam grooves D . . . D^2 formed in the back of the casing C. The grooves are provided with depressions D^3, which, when the pins F^3 engage therein, cause the pawls to engage with notches E^5 in the next numeral disk, and thus effect the transfer. The carrier is provided with a spring catch B^4 to engage in numbered notches B^5 in the bar A. In operation for purposes of addition, the pinions are brought into engagement with the rack, and by pressing upon the end of the bar A the catch B^4 is brought into the numbered notch required. The pressure on the thumb-piece C^8 is relaxed, and the casing is returned by the spring A^2. To add tens or hundreds, the frame is moved by pressing in the rod C^1 to bring the appropriate pinion into gear with the rack. A catch may be provided to hold it in this position. By reversing the process, i.e. allowing the pinions to come into gear on the return of the carrier, the operation of subtraction may be performed.

9070.

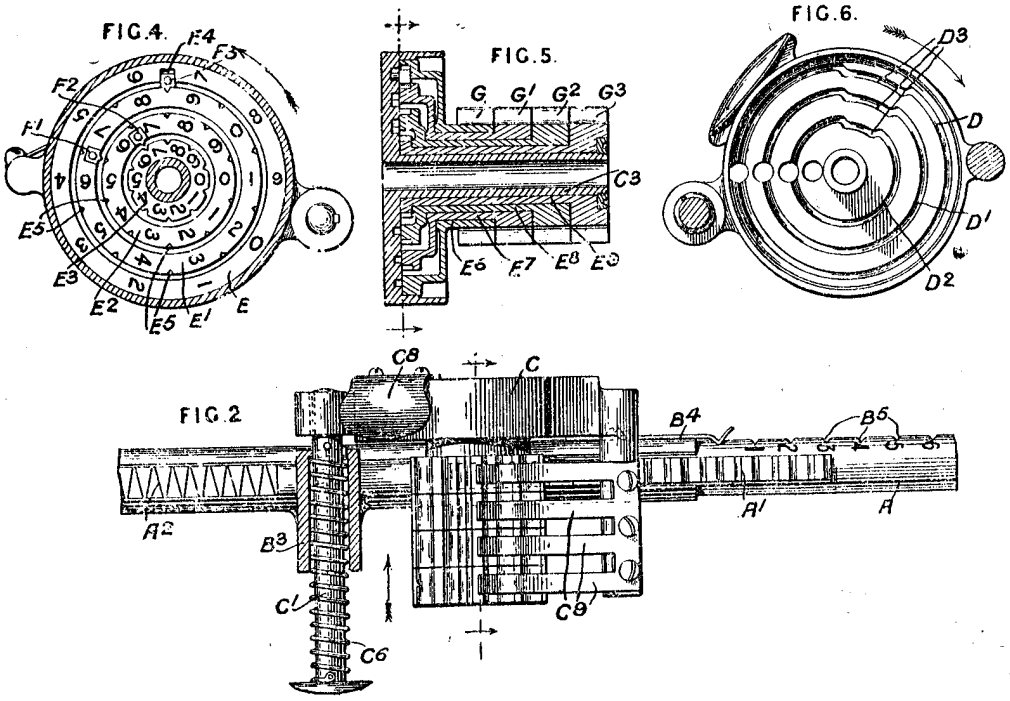

© B O B Williams Printed22/11/2023 CalcPatents Ed. 1.doc

Blackshaw J E & Rogers G H 19474/1891 Adder Rings

19,474. Blackshaw, J. E., and **Rogers, G. H.** Nov. 10.

FIG 1

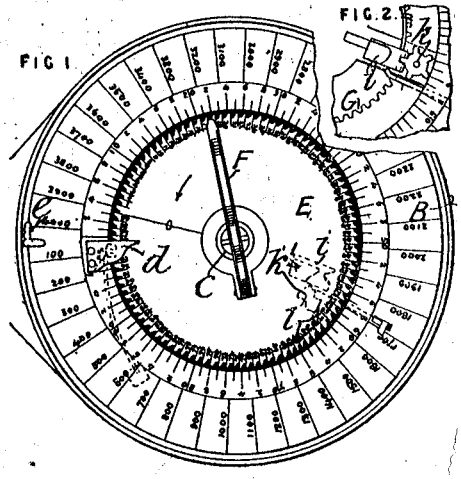

FIG.2.

Calculating - apparatus. — Relates to adding machines. A ring C on the top of a circular box B has an inner zone of graduations for counting up to a hundred and an outer one for thousands. Within the ring is a wheel E with a hundred numbered teeth over which lies a hinged arm F which can be turned back and engaged with any tooth, and then brought forward again to a zero stop *d*. In order to cause the complete revolution of the wheel E to produce a movement of the index *e* of the hundreds ring, the index is carried by a wheel G, Fig. 2, under the counting-wheel and in gear with the pinion having on its arbor a star-wheel *h*, which is normally locked by a catch *i*. On the completion of a revolution a bevelled lug k^1 on the underside of the counting-wheel pushes back the catch and a shoulder *l* drives the star pinion.

Blaustein J 115029 of 1917 Adder Keyboard

115,029. Blaustein, J. April 20, 1917, [*Convention date*].

Adding-apparatus.—In machines of the key-set, lever-operated type having flexible keyboards, each bank of keys with the associated mechanism is mounted as a unit, actuation being obtained by the engagement of pins on the keys with differentially sloping members on longitudinally-moving plates. Movement of the plates is communicated to broad-leaved pinions carried by setting-shafts adapted to be engaged and rotated, to an amount corresponding to the keys depressed, by cylinders bearing stepped teeth. Locking-means are provided for the setting-shafts, justifying and restoring devices for the longitudinally moving plates.

Differential mechanism. — Movement of the plates 31 due to the engagement of pins 30, Fig. 3, on the keys with differentially sloping faces 34 is communicated to slotted plates 37 moving on pins 39 carried on sectional plates 3, Fig. 7, by extensions of links 32 upon which the plates 31 are carried. Secured to the plates 37 are hooked members 40, Fig. 7, engaging reduced portions between broad-leaved pinions 14 and smaller pinions 42, which are formed in one therewith and adapted to slide upon and rotate with setting shafts 11 carried by the main casing. Mounted on a series of shafts 9, rotated by bevel gearing from the main crankshaft 6, are stepped cylinders 43 and toothed cylinders 43, the teeth being stepped so that the number thereof engaging the pinions 14 after setting corresponds to the key depressed. Locking-devices for the setting-shafts 11 during inactive periods comprise (1) Geneva wheels 44 connected to the shafts 11 by ratchet mechanism and engaged by corresponding parts 14^a on the shafts 9, and (2) spring-depressed pawls 49 adapted to engage the pinions 42. The pawls are mounted on rocking-shafts 46 carried by the plates 40 and are lifted when projections 51 on the shafts are struck by the appropriate steps 52 of the cylinders 53, the pawls being retained in this position by contact with the surfaces of the cylinders. Justifying-means for the longitudinally moving-plates 37 comprise teeth 71 thereon engaged by a knife edge 73 carried by arms 74 secured to a shaft 75 which

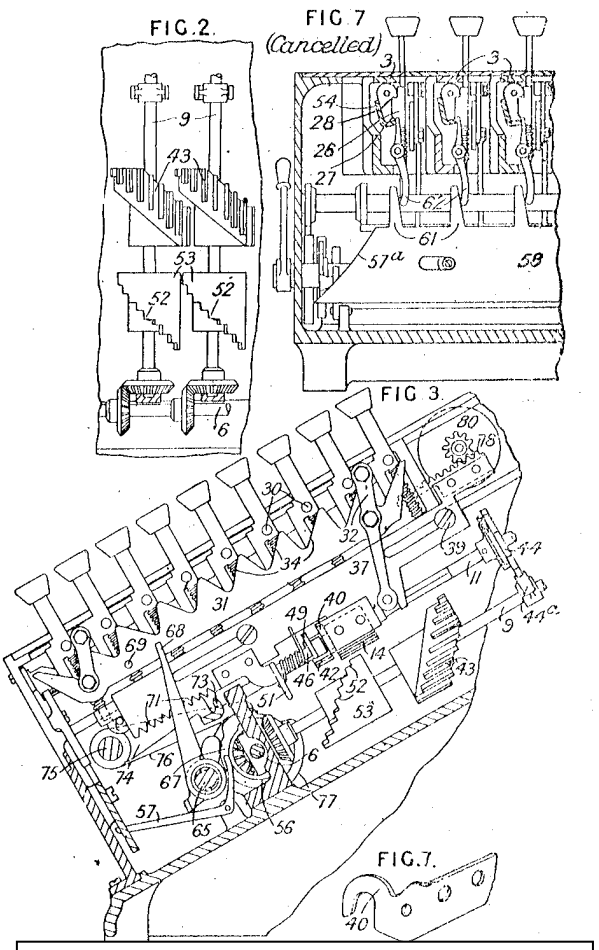

Blum M 28308/1907 Adder printer

28,308. Blum, M. Dec. 24.

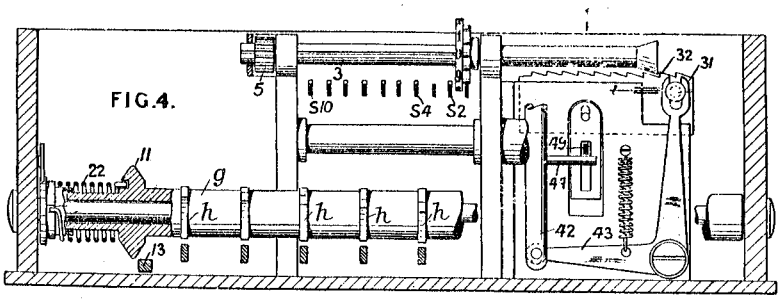

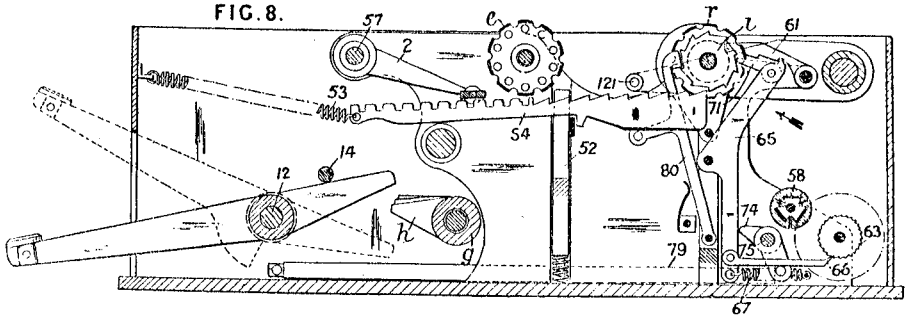

Calculating-apparatus.—In a single-bank key-operated printing adding-machine, a single item-printing wheel is employed, together with a totalizing-counter having a printing-wheel and associated parts for each denomination. Upon depression of one of the ten lever amount keys, the item-wheel starting in the units denomination is differentially rotated, the corresponding wheel of the totalizing counter being simultaneously actuated. The digit of that denomination is then printed, and the item-wheel is immediately spaced laterally to the next higher denomination. After all the digits of an item have thus been recorded, the paper is fed by a line-spacing key T, from which the transfer action on the totalizing-counter is also completed. Totals are printed by means of the key S. The machine comprises means for: (1) differentially setting the item-wheel; (2) printing items; (3) spacing laterally; (4) actuating the totalizing-counter; (5) spacing the lines; (6) effecting transfer on the totalizing-counter; (7) printing the total; (8) zeroizing the totalizing-counter; (9) inking the type-wheels. (1) The amount key-levers, Fig. 3, are loosely pivoted upon a sleeve 12 surrounding the fixed shaft 12^a, and their rear ends lift through varying distances the staggered arms *h* upon a sleeve *g*, which by means of a sector and pinion 4, 5, rotates the item-printing wheel *e*. Overlying the levers is a universal bar 14 controlled by a dash-pot, and rigidly attached by arms to the sleeve 12, from

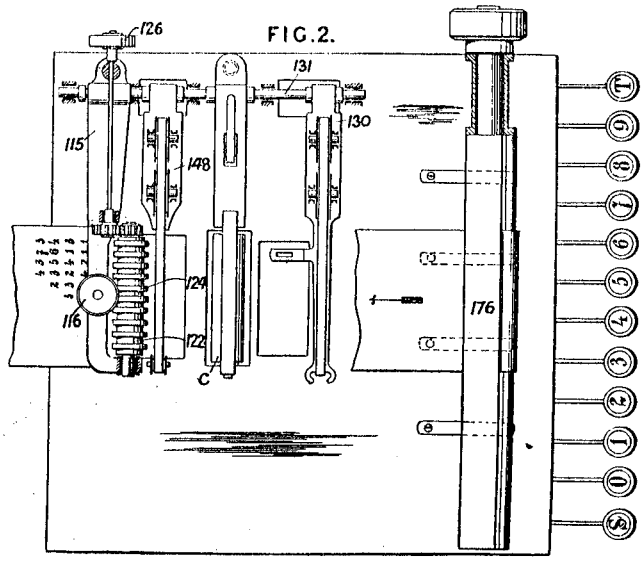

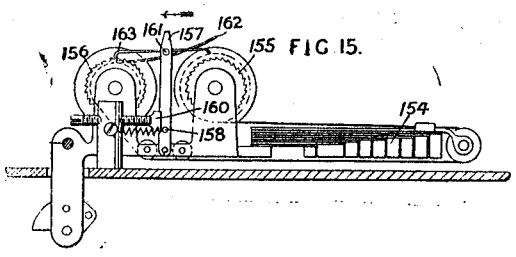

680

Bollee M 16677/1889 Mechanical Multiplier

16,677. Bollée, M. Oct. 22.

Calculating-apparatus.—The Figure shows a sectional plan of the machine. Its application to divisions, addition, and subtraction will be understood from its use in multiplication. A rectangular frame I*a*, I*b*, I*c*, I*d*, having vertical play in corner brackets E*a*, E*b*, E*c*, E*d*, supports a carriage A*c*, A*d*, bearing a series of plates A*h*, each having ten numbered notches and a series of slides A*b*, each having cross rows of pins A*b*[1]. The first pins of the first row have lengths proportional to the nine digits. The remaining rows represent in pairs the units and tens of the products of all the digits by each one in succession. A stepped rider A*l* can be slid on a bridge A*k*, and the whole carriage can be traversed along the frame I*a* &c. by rack and pinion gear, the pinion being turned by a handle A*m* above a notched disc A*n*. Above the carriage path is a row of triplets of racks B*a*, B*b*, B*c*, with the teeth of the first and second on the right, while those of the third are on the left. Over the racks is a sliding frame containing three superposed rows of spindles C*e*, C*f*, C*g*, of which the two first rows have pinions to gear with each other, while the two latter rows have pinions to gear with the racks, and number-indicating wheels to show respectively the product and the multiplier. Each spindle C*f* has also a cam for shifting back the spindle C*e* on its left. Behind the spindle frame is a shaft D*b* with cams D*c* for pushing forward the spindles C*e*, and depressing the lever D*e*

56

into engagement with the pinions on the spindles. Under the spindles runs a main operating-shaft H with handles connected by cams and cranks to the sliding lift frames. The mode of operation is as follows:—The carriage A*b* being brought to the extreme right, the slides A*b* are adjusted so that catches engage the notched bars A*h* at the figures of the multiplicand. The rider A*l* is brought over

FIG 2.

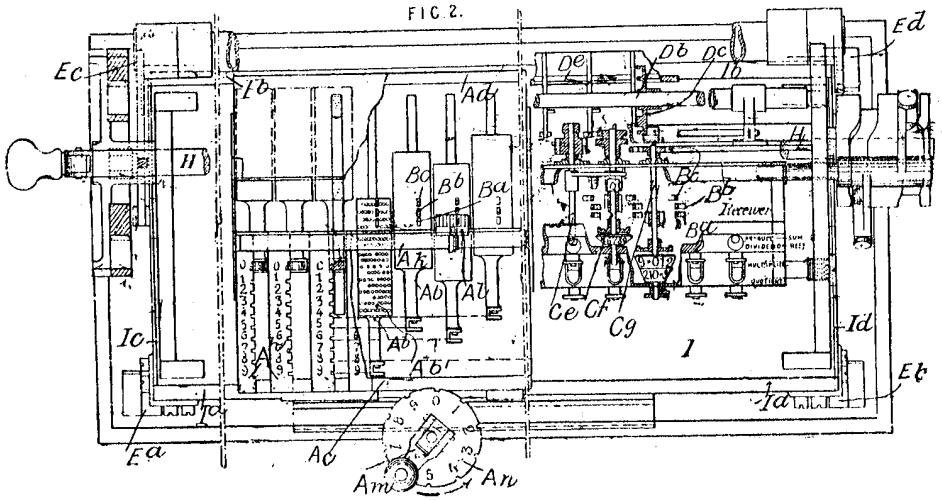

the units slide A*b*. The handle A*m* is rotated always in the same direction, and through zero to the notches numbered as the figures of the multiplier, and is left at each notch, while the shaft H is rotated once round, producing the following cycle of results:—(1) The spindles are shifted from mid-position to the right, and the frame I with its carriage is raised, so that the racks B*c* are lifted by the tens pins, and turn the spindles C*f* accordingly. (2) The spindle frame is shifted back till slightly to the right of its mid-position, and the levers D*e* carry forward the tens by advancing those spindles C*e*, which have been pushed back into the lever paths, and into gear with their fellow spindles C*f*. (3) The spindle is shifted to the left, and the carriage is lowered, so that the spindles C*f* are rotated by the racks B*b* over the units pins, and the spindles C*g* by the racks B*a* over the rider A*l*. (4) The spindle frame returns a little to the right of mid-position, and the levers D*e* carry forward the tens again. (5) The spindle frame comes into mid-position as at starting. After repeating this cycle for each figure of the multiplier, the complete product is shown by the indicators on the spindles C*f*.

As described by Martin [7]

"All calculating machines described so far have implemented multiplication by continued addition and division by continued subtraction. Leon Bollée. Born 1 April 1870, constructed in the course of three months (from February until April 1888) a calculating machine in which the multiplication table was mechanically represented for the first time. In other words, he created the multiplication body that we find today in the Millionaire machine, in the Moon-Hopkins machine, and in the Kuhrt machine…"

Bollinger & Landry 27446/1907 Pin wheel machine

27,446. Bollinger, A., Landry, A., and **Landry, E.** Dec. 13, 1906, [*date applied for under Patents Act, 1901*].

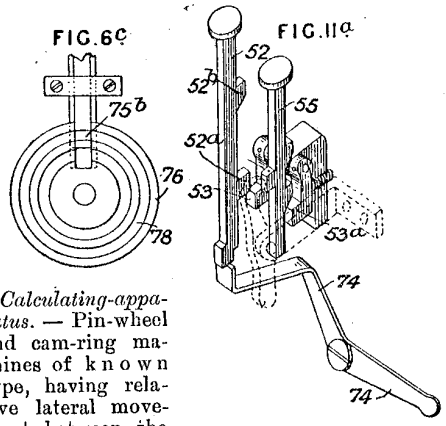

Calculating-apparatus. — Pin-wheel and cam-ring machines of known type, having relative lateral movement between the setting-mechanism and the totalizing-counter, whereby they are adapted for the four rules, are provided with a keyboard for selectively moving the cam-rings, with means for preventing the normal restoration of such rings in the case of multiplication or division, and with a printing-attachment. Four pin-wheels 2, 3, 4, 5, Figs. 1 and 2, are secured to a drum *b*, which is capable of movement longitudinally, together with all the setting and actuating parts, upon the main driving-shaft *a*. Each pin-wheel has a cam-ring 7 . . . 10 with a symmetrical groove, two opposite quadrants of which retract while the other two project the lateral lugs 6^a upon the pins 6. During an addition, the driving-shaft makes a complete revolution, while each cam-ring makes half a revolution relatively thereto, in the opposite direction; the first half of the movement is concerned with the projection of the pins according to the key depressed, and the second half with the operation of the totalizer receiving-wheels 18 and the retraction of the pins. The keys 13 are locked, save at the rest position of the handle, by a laterally movable locking-plate 29 operated by a pivoted lever 30 and a cam-depression on the end plate of the drum. When depressed, one key only in each bank is held down by the pivoted spring yoke 23, and its lower end forms a stop for one of the projections 16, 16^a, 17, 17^a with which each cam-ring is provided; but upon simultaneous displacement of all the yokes

Bolton F 2177/1875 Pricing liquid flow

2177. Bolton, F. June 14. [*Provisional protection only.*]

Liquid meters; counting-apparatus.—Relates to an indicator applied to liquid meters for the purpose of indicating the cost of the liquid which has passed through during any definite time. A vertical index cylinder rests on a horizontal toothed wheel driven from the meter mechanism and provided with crown teeth engaged by a spring pawl attached to the cylinder. The teeth may otherwise be on the cylinder and the pawl or catch on the wheel. A scale of charges is marked round the top of the cylinder, or several scales, to allow for variation in price, may be so marked. A spring pencil or marker, which marks the cylinder as it revolves, is held by a tube on a nut which may move in a slide and on a screwed shaft parallel to the cylinder. This shaft is prevented from rotating by means of a pawl and ratchet-wheel. Another parallel shaft in a swivel bearing carries a pinion which may be moved into gear with a pinion on the index cylinder, but is, in general, held out of gear by a spring. A key, inserted in a vertical slot in the cover by the official who takes note of the indication, is pressed against the cylinder at the end of the registration line in order to mark it officially, and, when withdrawn, causes the swivel shaft to turn so that the pinions gear in order to set back the cylinder to its starting point. When the key ceases to act upon this shaft, it moves the screwed shaft so that the marker is depressed slightly in order to mark the next line underneath those already made. The index cylinder may have a scale of measurement attached instead of or in addition to the scales of prices, and may be used alone or in conjunction with the ordinary dials.

or

Boorman J A 13313/1887 Bevel wheel design

13,313. Boorman, J. A. Oct. 1.

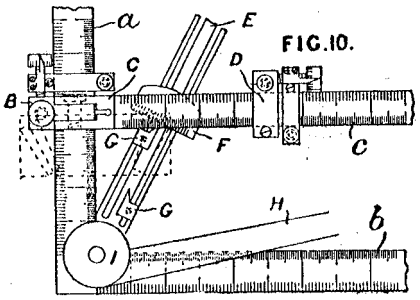

FIG.10.

Calculating-apparatus. — The Figure shows an instrument for determining the angles of bevel-wheels for shafts at right-angles and the sectional dimensions of their teeth. The arms *a*, *b* of a quadrant are graduated to any suitable scale. A reading-slide B on the arm *a* carries a graduated straight-edge *c* parallel to the arm *b*, and this straight-edge carries a reading-slide D. Both slides are provided with vernier screws. There are two pivoted radial arms E and H, the former lying beneath the quadrant arc and reading by its central line, and the latter lying above the arc and reading by one edge. Upon the arm E are two coursers G with pointers coincident with the central line and a slide F with graduations on its inner edge which is at right-angles to the central arm. These graduations give the faces and flanks, each graduation corresponding to an eighth of an inch in pitch. The slides C, D are set to the radii of the wheels obtained from the ordinary tables using eighth pitches. The arm E is turned till one of the coursers *G* fits in the angle between C and D, when it is fixed by the milled-headed screw I. The arm then reads the angles of the pitch cones. With the slide F and the arm H are determined the angles of the top of the teeth and the bottom of the interdental spaces. By the slide F also and the straight-edge C the greatest diameter of the blank is ascertained.

999

Borner F 2104/1902 Multiplication table

2104. Börner, F. Jan. 27.

FIG. 1.

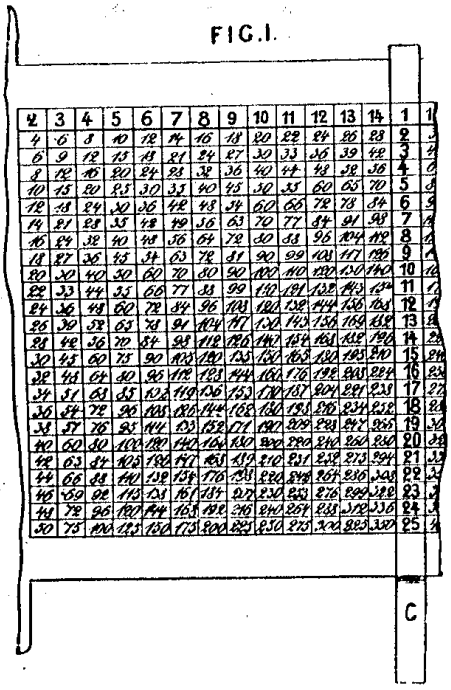

Calculating-apparatus.—Consists of a multiplication table upon a card with or without a cursor *c*. It may be printed on a postcard, and advertisements may occupy the margin.

Bordt A 20596/1911 Adder printer

20,596. Bordt, A. Sept. 16, 1910, [*Convention date*]. [*Addition to* 5214/09.]

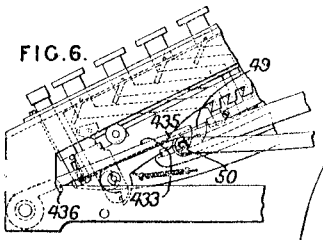

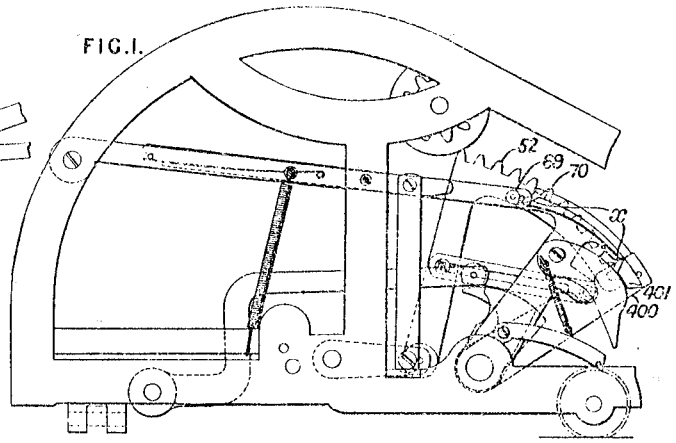

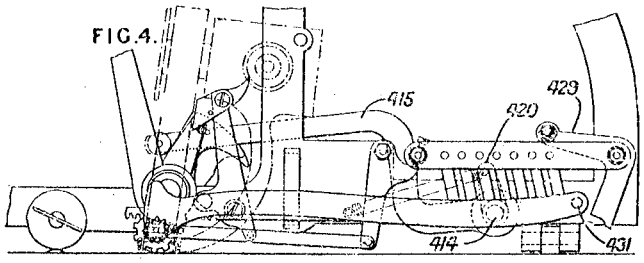

Adding - apparatus ; controlling printing of zeros. — Relates to means whereby the printing of the ciphers of the rows of keys to the right of the lowest row in which a numeral key has been depressed is effected when the main handle is operated. When a key is depressed, a corresponding lever 49 is raised and thereby by means of a pin 435 resting on the lever an additional lever 433 is raised to release the sliding block 50, which is moved until it is arrested by the end of the depressed key. The levers 433 are also provided with fingers 436 which extend to the right and below the next lever 433, so that the movement of a lever raises those to the right to allow the block 50 to slide forward until arrested by the lever 49, and thereby move the type-wheels from the blank to the zero-printing position. The actuating-sectors 52 are withheld from engagement with the totalizer wheels while the type-wheels are moving to the zero position by providing the ends of the engagement-producing sectors 70 with bevelled portions *x*.

Differential mechanism; printing-mechanism. —The Specification as open to inspection under Section 91 (3) (*a*) comprises also means whereby the actuating-parts for the numeral disks are maintained in engagement therewith until the rearward stroke of the operating-handle has been completed, and are then forcibly disconnected therefrom to enable said parts to resume their normal position. This engagement is effected by providing the cam-surface of the sector 70 with an extension 401 on a separate arm 400 which arrests the roller 69 and holds it up until the end of the stroke. Means are also described whereby an invariable force is exerted to actuate the printing-mechanism and a device is employed to throw out of action the said mechanism. The frame carrying the type-wheels is mounted on a shaft 414, the rotation of which, to effect the printing, is controlled by

Bordwine J 2895/1864 Spherical trig

2895. Pitman, J., [*Bordwine, J.*, partly]. Nov. 19. [*Provisional protection only.*]

Calculating - apparatus. — For determining latitude and longitude, and for solving problems in navigation, nautical astronomy and geometry, a graduated horizontal circle about the axis of which a vertical graduated half circle is mounted to rotate, is employed. A slider on the half circle carries a quadrant which can be set to the observed declination of an object. Other graduated arcs are fitted to the edge of the flat ring.

Bosanquet C J 6826/1894 Pocket slide rule

6826. Bosanquet, C. J. April 5.

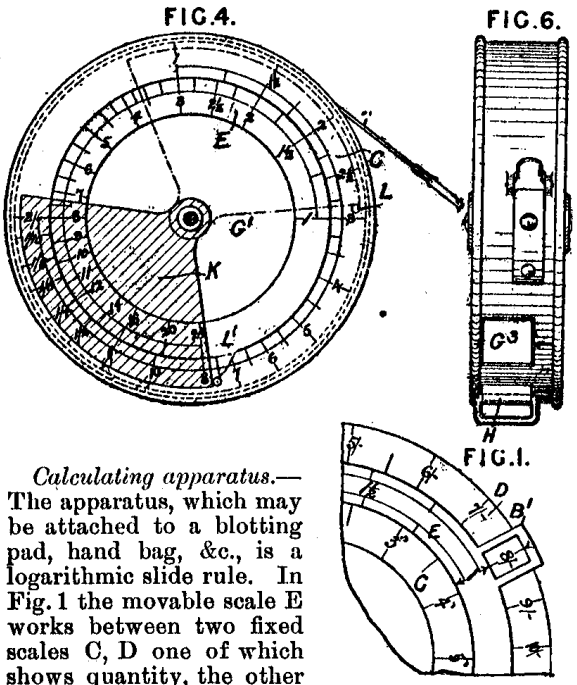

Calculating apparatus.— The apparatus, which may be attached to a blotting pad, hand bag, &c., is a logarithmic slide rule. In Fig. 1 the movable scale E works between two fixed scales C, D one of which shows quantity, the other price, and to avoid any mistake the latter is read in the index loop B¹. Figs. 4 and 6 show another arrangement, in which the indicating scale is marked upon a tape measure H read through an aperture G³, while the price and quantity scales are displayed at the side through a window G¹, one being marked on the case and the other on the spring drum of the case. A shutter K frictionally connected with the drum but limited in its movements by stops L, L¹ conceals portions of the scale which are not required for reference. Other arrangements are described; for instance, the scales may be placed on two portions of a hollow cylinder fitting together along a helical line and the reading may be taken from a scale on a rod, preferably a pencil, inserted in the cylinder.

Boss-Gonzelmann J 17518/1913 Add columns

17,518. Conzelmann, J. Boss-. July 30, 1912, [*Convention date*].

Adding - apparatus.—In apparatus in which the digits of each denomination are separately summed, the total of such digits, or of the items, appearing in the apertures 4, Fig. 1, a special bank of denomination - selecting keys 21 is provided, the depression of one of which connects the corresponding receiving-wheel 7 with the appropriate wheel 9 which is driven directly by its actuating-key 11. This connexion is made through a wheel 10, attached to the wheel 9, and one of a number of wheels 13, which are moved along their shaft 12 by the keys 21 through levers 24. The depression of a key 21 also restores to normal position the previously-actuated lower key, and a common restoring-bar A is provided to restore the selecting-key of the highest denomination used. The actuating-keys 11 are normally held by latching-means 18, 19, Fig. 3, in positions in which their toothed stems are not in engagement with the wheels 9. The keys are pivotally mounted in sleeves or tubes 14 and on being depressed against their springs 17 and pushed in, the wheels 9 are actuated. The actuation of denomination - selecting key restores the previously-depressed key 21 by means of a lever and pin 32, and slides the next intermediate wheel 13 into position to gear with the wheels 10, 7. The restoring-bar A is guided by means of inclined slots so as to move parallel to itself on being withdrawn, during which movement it engages with the pin 32 on the selecting-key of the highest denomination used.

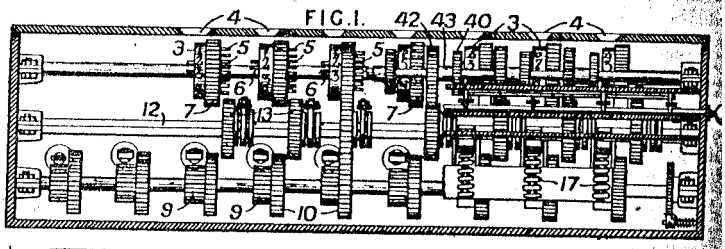

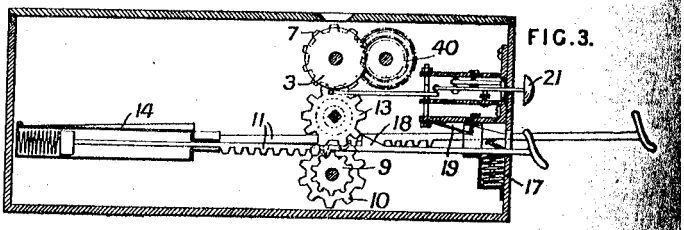

Transfer mechanism.—Pins 6, Fig. 1, on numeral-drums 3, engage once in each revolution

the drums with transfer wheels 40, Fig. 3, which are connected by sleeves 43 with toothed wheels 42, engaging the rings of pins 5 carried

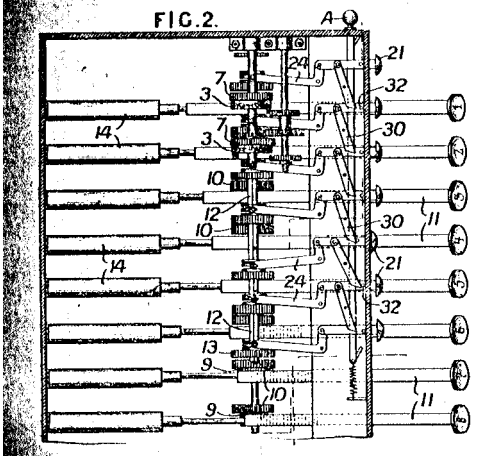

by the next higher receiving-wheels 7. The drums 3 and wheels 7 of each denomination are rigidly connected to one another.

© B O B Williams Printed22/11/2023 CalcPatents Ed. 1.doc

Bottone N 2361/1875 Adder £sd

2361. Bottone, N. June 29. [*Provisional protection only.*]

Calculating - apparatus. — A machine for the mechanical addition of numbers is provided with ten keys, each of which is fitted with a projection on its underside, so that, on the depression of a key, a corresponding lever pawl is pressed down sufficiently to turn a ratchet-wheel on its return motion through an angle proportionate to the number being added. The ratchet-wheel spindle carries a number of index wheels marked with numbers on the peripheries and geared together by toothed or peg-wheels and pinions so that each wheel advances one figure at a time by the advance of the adjoining and lower digit-wheel from nine to ten ; the unit-wheel is fast on the spindle. The keys being operated as necessary, the index-wheels display the required sum through an opening in the containing case. Three sets of key may be used for adding pounds, shillings, and pence, or one set may be used in conjunction with separate index-wheels for the pounds &c. The ratchet-wheel spindle carries a sliding toothed wheel, which may be made to gear with the pounds, shillings, or pence index-wheels on another spindle.

Boucher A E M 4310/1876 Watch type slide rule

4310. Newton, H.E., [*Boucher, A. E. M.*]. Nov. 7.

Slide-rules. — In order to reduce the bulk of a slide-rule so that it may be carried in the pocket easily, the scales are marked upon circular discs which are mounted in a case similar to that of a watch. A larger form for office use is also described. The pocket instrument, shown in elevation in Fig. 2 and in section, along the radial lines through the milled heads C^1, A, in Fig. 5, is provided on opposite sides with dials d, d^1, Fig. 5, for arithmetical and trigonometrical calculations respectively. Each dial has two concentric scales, the outer and inner scales of the dial d being divided equally and logarithmically, respectively, while those of the dial d^1 are divided to represent sines and tangents respectively. The dial d is attached by screws a to a wheel D which is mounted loosely on a fixed boss L and is driven by a pinion E on the shaft C to which the milled head C^1 is attached. The other dial d^1 is fixed in a rabbet in the case p. The pointers B, I of the two dials d, d^1 are fastened in one plane to a spindle H, which passes through the boss L and carries a wheel by which it is driven from the pinion F on the shaft A^1 of the milled head A. The shafts A^1, C pass through the central ring M of the case p and into the boss L, and are held by screws V, V^1 which enter circular grooves in them. The case p is provided with glass covers on each side and with a ring by means of which it may be attached to a chain. A fixed index or pointer K is provided in front of the moving dial d. In another form of the pocket apparatus, the moving dial only is provided and the stationary index K and pointer B are replaced by a fixed graduated ring round the outside of the dial d, which in this case carries the logarithmic scale only. A compass, an aneroid barometer, or a thermometer may be placed in the vacant space in the centre of the instrument. In the large instrument, the dial A, Figs. 6 and 7, fixed to the

FIG.5.

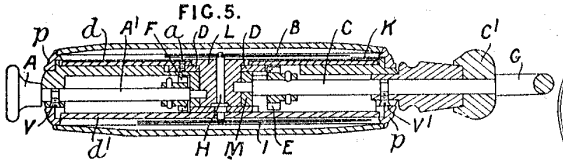

FIG.2.

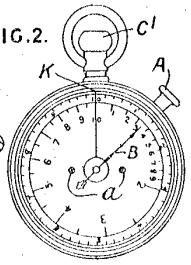

FIG.6.

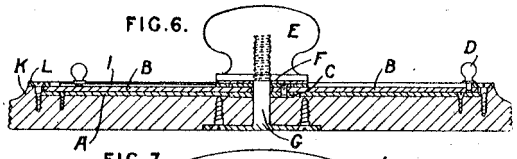

FIG.7.

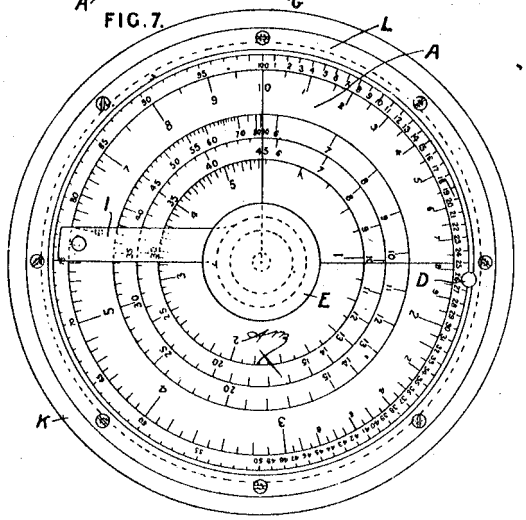

© B O B Williams Printed

wooden base K, is provided with a spiral scale or with several circular scales as shown, for the purpose of dealing with large numbers, and is covered by a glass disc B upon which a radial line is drawn. A button D is provided for turning the disc B. A brass circle L, attached to the base K, and a moving brass needle I are also provided. The central pivot G is fixed to the base, passes through the dial A and disc B, and is provided with a screwed button E. Washers C, F are also attached to the glass disc B. The dial A may be made movable if desired, and a watch, compass, aneroid barometer, or thermometer may be placed in its vacant central portion. The apparatus may also be modified so that it may be adapted to the round handle of a walking-stick or umbrella.

See further [Hopp, 2000 #94] [16]

Bousfield G 12806/1886 Slide Rule for Timber Trade

12,806. Bousfield, G. Oct. 8.

Slide-rules.—The instrument is chiefly designed for use in the timber trade, but is also applicable for many other purposes. The frame is twelve inches long and graduated on one edge in inches, Fig. 3, and on the other bevelled edge, Fig. 1, with reduced scales for reading from plans. The slide is about thirteen inches long, twelve inches being marked down a central scale so that, when it is drawn out, the instrument may be used as a two-foot rule. On one side, Fig. 1, the rule is graduated on the same plan as the ordinary carpenters' slide-rule, except that the scales are arranged vertically, greater clearness being thus obtained. On the other side, Fig. 2, are various scales, the principal being duodecimal scales for cubic round, square, and unsquared timber or scantling, and a scale of standard measurements for comparing linear, superfici and cubic feet and the relative St. Petersburg standard measurements.

FIG.1. FIG.2. FIG.3

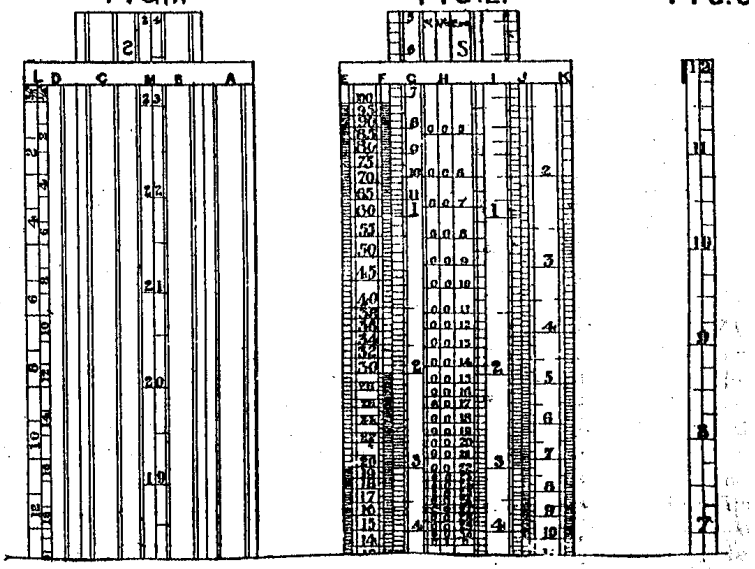

150

See
BOUSFIELD, GEORGE
The "Vade Mecum Slide Rule" designed expressly for the timber trade by George Bousfield. Jane Rees. JOS V8.1 Spring 1999

Branczik K W 14142/1906 Circular slide rule with gears

its underside to stir the milk.

14,142. Branczik, K. W. June 20.

Slide-rules.—In calculating-apparatus of the slide-rule type comprising a peripherally graduated ring or rings adapted to rotate between two fixed disks, the rotatable rings are operated by means of gear-wheels. The circular plates A, B, Fig. 2, are relatively fixed by pins K and have circular tongues which slide in circular slots in the rotatable ring or rings C. The necessary scales are marked on the peripheries of the members A, B, and C. The ring C is rotated by means of a handle H, projecting through the disk B, and intermediate wheels G, F, E, the latter gearing with an annular wheel D attached to the ring C. When there are more than one ring C, a similar gear is provided for each such member. The wheels may be toothed wheels or friction wheels with rubber peripheries. A cursor R with glass plates S and index line Q is kept in place by springs N and pins O. The cursor has two screws P for adjusting the index line.

FIG.2.

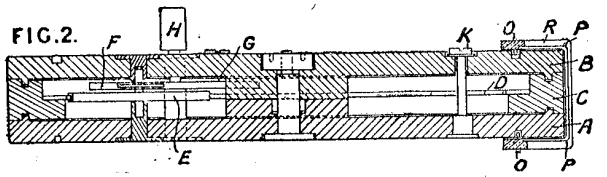

FIG.3.

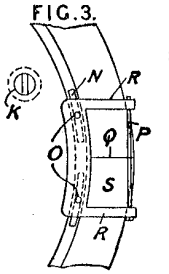

Breguet 15951/1884 Mariner's compass adjuster

15,951. Reddie, A. W. L., [*Soc. Anonyme Maison Bréguet*]. Dec. 4.

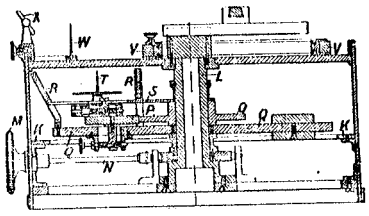

Calculating-apparatus.—Relates to a mariner's compass corrector. The instrument is designed to calculate the true north from the formula—deviation = $A + B \sin z + C \cos z + D \sin 2z + E \cos 2z$, where A, D, E do not appreciably vary during the voyage, while B and C have to be determined from time to time, z being the true magnetic course of the vessel. A large ring K, marked with the compass points, but in the reverse direction so as to be correctly reflected in a mirror, is fixed in the case of the instrument, through which runs a central spindle L rotated as required by the key M on a spindle N suitably geared with L. On this central spindle is mounted a graduated toothed wheel O gearing with another P of half the diameter, the bearings of which are formed in a pointer Q pivoted on L and supporting the mirrors R, R. A second pointer S carrying a blackened point T is pivoted on L and provided with a slot through which passes an adjustably-eccentric crank on P. Thus, as the pointer Q rotates, P will both rotate with it and vibrate about it. The top of the case is glazed, and above this a small ring V, with compass points marked reversely on its edge, can be adjusted as required by sliding blocks, and by rotating it in its mounting. The diameter of this ring is equal to the distance of the blackened point T from the central axis of the instrument. A second blackened point W and mirror X may be moved round the rim of the case and fixed where desired. The use of the blackened points is to get the reflections of the different ring graduations correctly aligned in any required manner. Two observations on different courses are taken

Bremer H 18538/1903 Tab calc

18,538. Bremer, H. Aug. 27.

FIG.1.

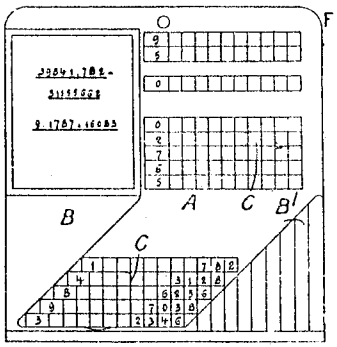

Calculating-apparatus.—An apparatus for facilitating multiplication consists of a frame on which slips bearing numbers from a multiplication table are arranged, and the vertical rows then added as in arithmetic. In multiplying 782 by 39,841 the numbered strips C, Fig. 1, corresponding to the multiplier are arranged for the units, tens, hundreds, and other rows in the frame B, B^1 on the board A, and upon them are written the proper three-by-one-figure products from the table, Fig. 2. Addition then gives the product. For obtaining four-by-one-figure products a slip, Fig. 3, is applied to the table of products, with the arguments on its top line upon the proper columns of the table. A row of figures is seen through a slit,

FIG.2.

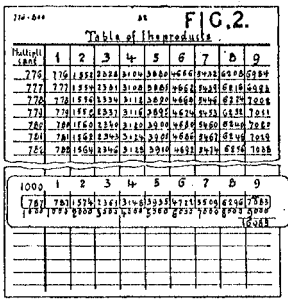

FIG.3.

and below them appear an integral thousand number at the left, followed by the products of itself and the first nine numbers. Thus the sum of the two numbers under "6" is six times the sum of the two numbers on the extreme left. There is a separate slip for each integral thousand.

Brennand W & W E 1729/1893 Draw link motion curves

1729. **Brennand, W.,** and **Brennand, W. E.** Jan. 26.

Calculating-apparatus.—The object is to draw link-motion curves and reduce them to a systematic classification. In the form shown in Fig. 1, the cranks r^1, r^2 are pivoted to adjustable graduated slides x^1, x^2 secured to the drawing-board by clips, by passing the pins o^1, o^2 through any required perforation in the cranks. The ends A, B of the cranks are connected by a perforated link which may be straight or of various other forms (see Fig. 10 for example), so as to give the pencil P any desired position relatively to A and B. In order to facilitate classification on a decimal system the perforations in the parts are arranged according to a scale, twenty units of which are included between A and B. A greater number of bars than three may be employed if desired.

(*For Drawings see next page.*)

7

1729.

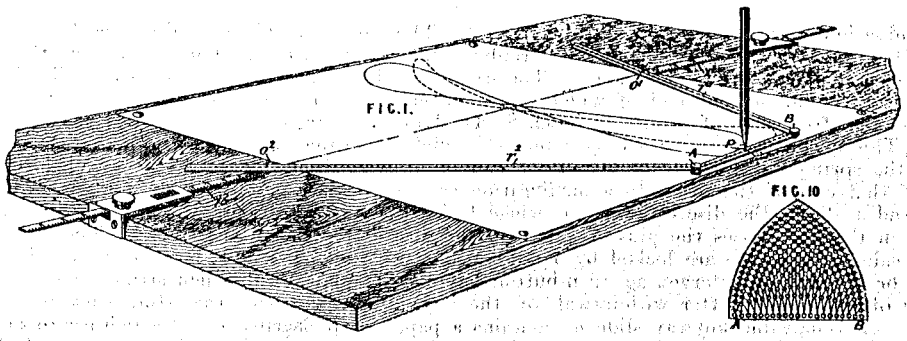

Breuer H 11575/1913 Tab calc

11,575. Breuer, H. May 19. *No Patent granted (Sealing fee not paid).*

Tabular calculators.—Apparatus for problems in multiplication and division comprises a cylinder 10, Fig. 3, bearing the multiplicands, a multiplier-indicating cylinder 60, and a series of laterally displaceable product-bearing cylinders 15 . . . 24. The selected multiplier, multiplicand, and product are exposed respectively through apertures 66, 67, 68. In order to compute a required product, a shaft 4 is pushed inwards against its spring so as to clutch with it a shaft 3 carrying a drum 46; the shaft 4 is thereupon turned by means of the handle 6 until the given multiplicand is exhibited by the cylinder 10, fixed to the arms 9, through the aperture 67. During the rotation of the shaft 4, all the product-bearing cylinders 15 . . . 24 are carried with it by the arms 9, which pass through longitudinal slots in the cylinders. The series of products corresponding to the given multiplicand are thus in the same horizontal line with it and with the aperture 68 for the products. The handle 6 is now released, and the handle 58 on the shaft 3 turned. Each rotation of the shaft 3 and drum 46 displaces

2 G

laterally, without rotating it, one of the product-bearing cylinders 15 . . . 24 from the threaded portion 47 to the threaded portion 48 by means of one of the helical grooves 62, 63, the cylinders 15 . . . 24 having fingers adapted engage the portions 47, 48 and the hel grooves. At the same time the multipl indicating cylinder 60 is turned one-tenth o

FIG. 3.

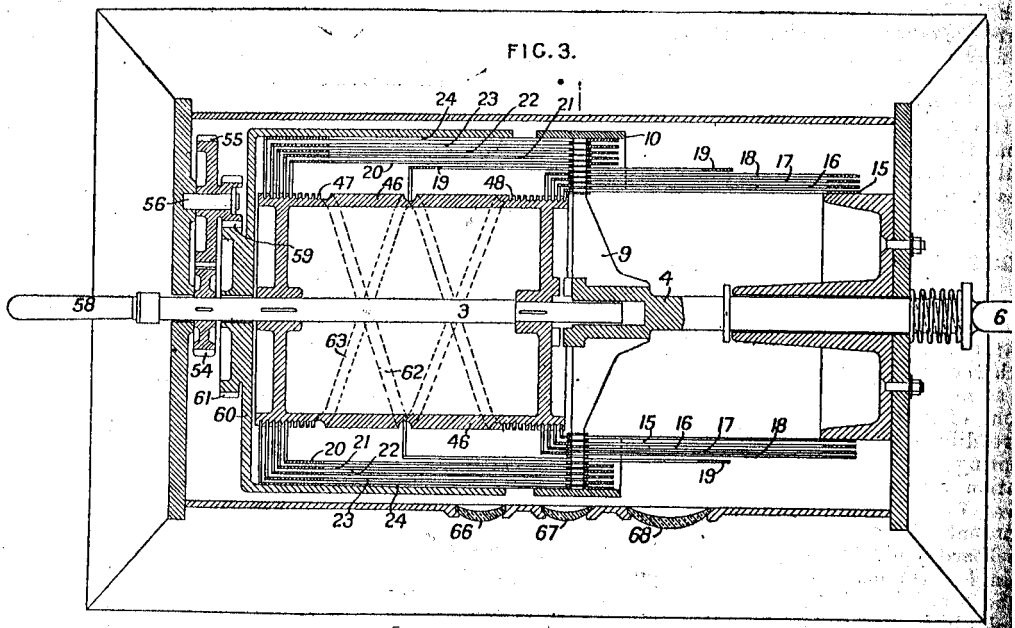

rotation by the gearing 54, 55, 59, 61 for every complete turn of the handle 58 and shaft 3, and the multiplier corresponding to the particular product appearing in the aperture 68 is thus exhibited through the aperture 66. After the multiplicand has been set as described, to set, for instance, the multiplier 46, the handle 58 is turned through four and six-tenths ro tions, which will cause the complete displa ment to the right of four of the product-bear cylinders and the partial displacement of fifth cylinder to the position necessary to exhi the required product through the aperture

Briggs I 1828/1901 Portable adder

1828. Briggs, I. Jan. 26.

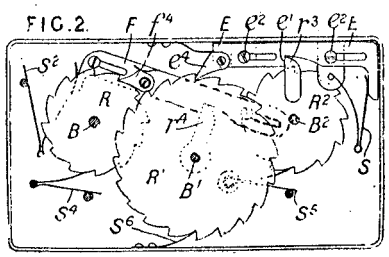

Calculating-apparatus.—Relates to an apparatus, the mechanism of which may be fitted into a case, purse, satchel, travelling bag, or dressing bag, for indicating the total amount of money spent while shopping, for use as a card counter in playing bézique &c., or for indicating the sums of weights or measurements. In using the apparatus for registering money spent, dials, indicating pounds, shillings, and pence, are carried by spindles B, B^1, B^2 having ratchet-wheels R, R^1, R^2 and operating-handles. When the ratchet-wheel R^2 has completed a rotation, a finger r^3 engages a shoulder e^1, on a slotted bar E sliding on pins e^2, so as to cause a spring-pressed pawl e^4 to operate the wheel R^1 by one tooth. A finger r^4 similarly operates a similar bar F and its spring-pressed pawl f^4, which engages the teeth on the wheel R. Spring detents S^4, S^5, S^6, and returning-springs S, S^2, are provided. The sum is read through openings in the front of the casing or the casing may have a glass front.

Bright G E 21646/1903 Calculate irregular areas

21,646. Bright, G. E. Oct. 8.

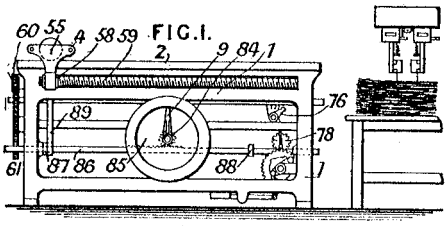

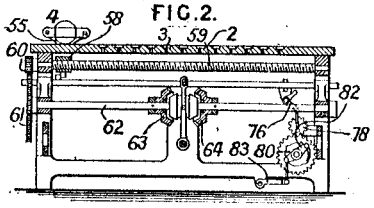

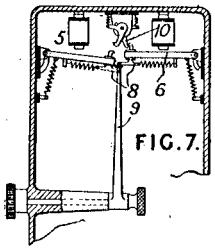

Calculating-apparatus; counting-apparatus. — The areas of irregular objects are measured, and the results registered, by an apparatus comprising a number of electric contacts disposed upon the surface of the measuring-table, a circuit-closer adapted to close the circuits of those contacts not covered by the object, and means for registering the number of contacts so covered. The table 2, Fig. 2, of non-conducting material, is provided with a number of electric contacts 3 insulated from one another, and suitably spaced apart. Each contact 3 is in circuit with the coil of an electromagnet 5,

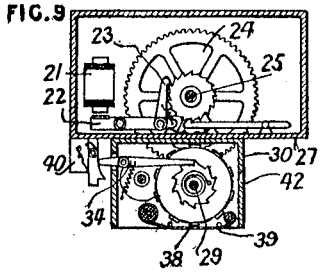

Fig. 7, the return wires of which coils are connected by branch wires to a common return wire to the battery, the other pole of which is connected to the circuit-closer 4. Each electromagnet 5 is provided with a pivoted armature 6, from which is supported a contact-dog 8 arranged in the path of movement of a swinging arm 9. In the attracted position of the armature, the dogs are adapted to engage a retaining-pawl 10, and in this position the dog is in the path of an insulated portion of the swinging arm 9. As the arm 9 passes, it turns the dog slightly, causing it to be released from the pawl 10 and to return to its normal unattracted position. In the unattracted position of the armature, the arm 9 completes a circuit with the dog 8 through a battery and an electromagnet 21 forming part of a counting-device shown in Fig. 9. Thus, when the circuit-closer 4 passes over the uncovered stops 3, the magnets 5 corresponding to

British Adding Machine Co 26763/1908 Adder

26,763. British Adding Machine Co., and **Browning, W. H.** Dec. 10.

FIG. 7.

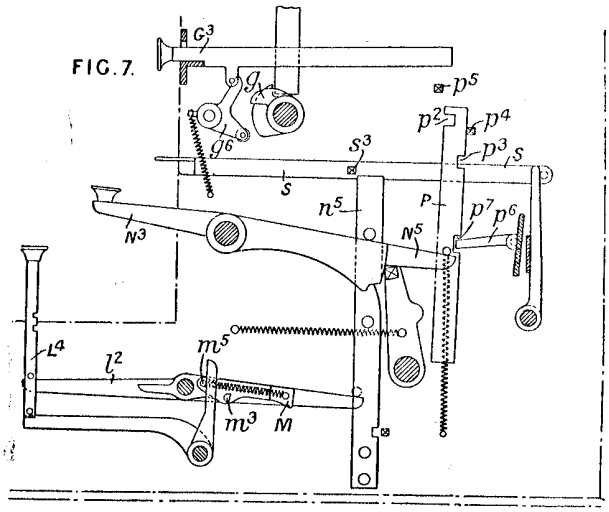

FIG. 1

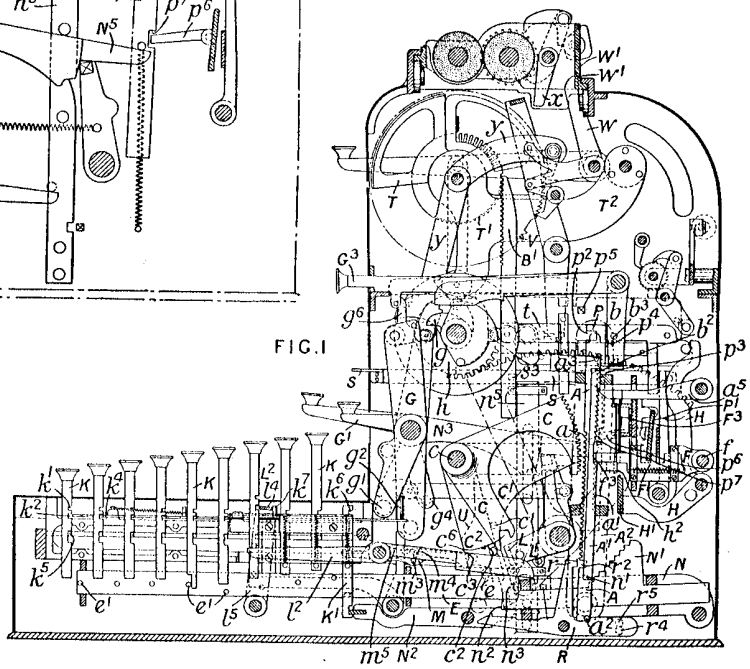

Calculating - apparatus. —In a multiple-bank key-set lever-operated adding and listing machine, of the type described in Specification No. 3383, A.D. 1904, wherein the totalizing is effected on counting-plates, one for each denomination, which are moved into gear and raised a given distance for each unit by means of quadrants set in position by the keys and control lever of the machine, and wherein the forward stroke of the operating-handle actuates the various parts through a cam shaft, and the backward stroke returns the parts to their normal positions, modifications are described in connexion with the means for locking and resetting the keys, effecting the transfer on the counting-plates, eliminating items from the totalizing-counter, control of zero printing effecting a "split" by the use of two or more eliminating-keys, setting up and taking totals with associated means for zeroizing the counting-plates and preventing printing of zeroes to the left, repeating an item, and printing items and totals and a distinguishing sign against eliminated items. A side elevation of the machine is shown in Fig. 1, and a plan in Fig. 4. The main and auxiliary counting-plates A, A^1 are mounted in a swinging or sliding frame A^2, and the main plate A is provided with teeth a on its front edge and with ratchet-teeth a^1 on the back, and has two projections a^2, a^3, near the bottom and top respectively, adapted to engage the plate A^1. Adjacent to the counting-plates, a type-setting plate B is mounted having rack teeth b^1 on its front edge and ratchet-teeth b^2 on the back, engaging a retaining-lever b. The teeth a, b^1 of the plates A, B are adapted to gear with toothed quadrants C, C^1 respectively mounted loosely on a shaft c and moved simultaneously by a connecting-lever C^2 engaging pins c^1, c^2 on the quadrants. The lower end of the lever C^2 has a notch engaging a pin e on a control bar E, which is capable of sliding to and fro and has a series of projections or stops e, one for each key, which engage the lower ends of the keys when they are depressed.

Locking and resetting keys. The keys K slide vertically, and are each provided with notches k^1, k^3 with which a locking-bar k^4 engages; upon a key being depressed a rocking-bar k^5 pivoted at the side of the keys is rocked to depress a rocking-member K^1, a notch k^6 of which allows the locking-bar k^4 to enter it, and at the same time engages the notches of the keys, locking them in

FIG.4.

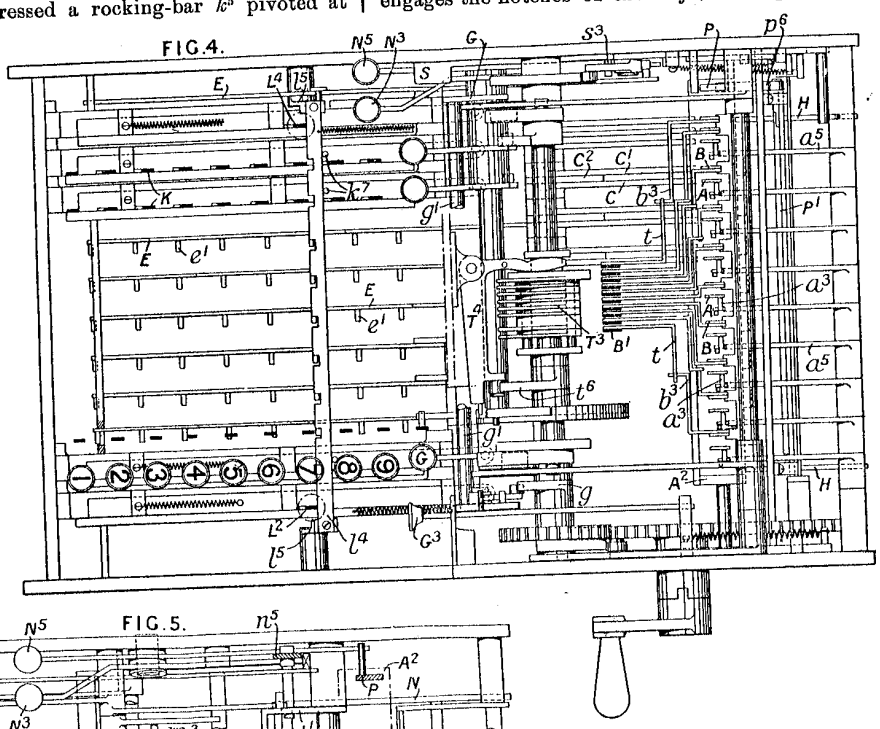

FIG.5.

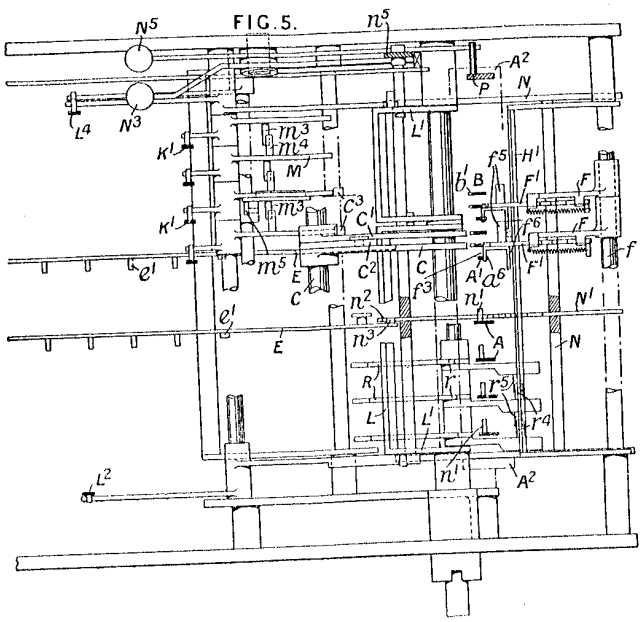

FIG.3.

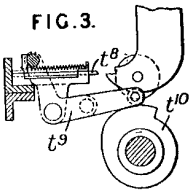

position. The keys are released by the cross-bar g^1 of a resetting-lever G operated by the engagement of a cam g on the cam shaft with a pin g^2 on the locking-bar. If an error has been made in the setting of an item, the depression of a key G^1 resets the keys and, by an arm g^4, restores the quadrants and the control bar to their initial position.

Transfer-mechanism. Behind the frame A^1, Fig. 5, bolt-levers F are mounted so as to rock on a shaft f, their front ends resting on a frame and each carrying a bolt F^1, which is provided with a pawl engaging the ratchet-teeth a^1, and with a projection f^3 which enters a notch a^6 in the auxiliary counting-plate, when in the normal position. When a transfer is being effected, the

© B O B Williams Printed22/11/2023 CalcPatents Ed. 1.doc

British Thomson Houston 8526/1912 Planimeter

8526. British Thomson-Houston Co., [*General Electric Co.*]. April 10.

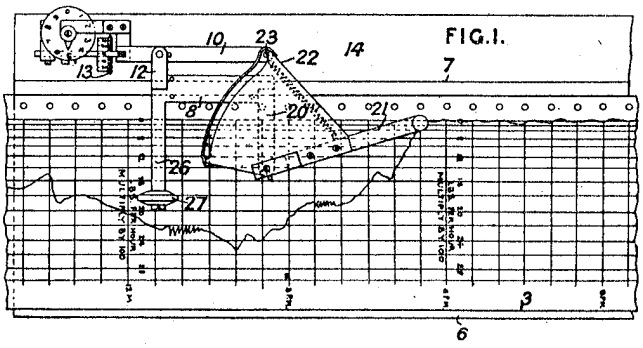

Planimeters. — In an instrument for measuring the area of curves, diagrams, &c. in which the values of the co-ordinates are not proportional to their height or length, the tracing-arm is pivoted to a rectilinearly - movable carriage and carries a cam which engages a pin on the arm of the measuring-wheel so as to vary the angular relation of the arms. Fig. 1 shows the planimeter in use upon the chart of a flow meter. The chart 3 is secured to a base 6, and the carriage 8 of the planimeter is adapted to slide along a bar 7 on the base. The measuring-wheel 13, which engages a special track 14, is mounted on an arm 10 pivoted to an arm 12 of the carriage, and is provided with a pin 23 engaging a cam-slot in a plate 22 secured to the tracing arm 21, which is pivoted to the arm 20 of the carriage. The movement of the planimeter is controlled by a roller 27 on the arm 26.

Brooks F W 3853/1889 Coin operated Age calculator

3853. Brooks, F. W. March 5.

FIG.4.

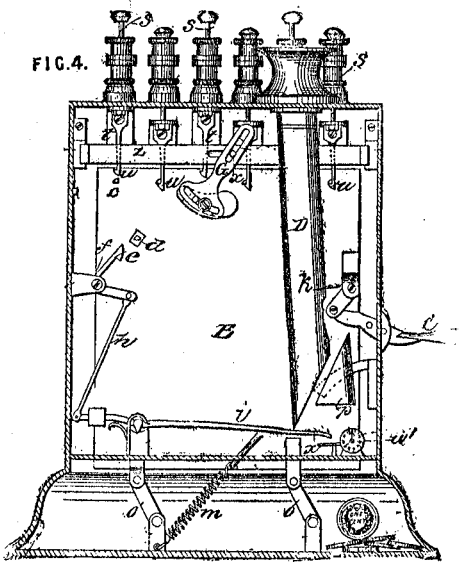

Calculating-apparatus, coin-freed. The apparatus is designed for calculating a person's age or for a like purpose, the operation being performed as follows :—A series of vertical columns of numbers are arranged on a plate B so that, on the insertion of a coin and working the handle C, these columns are brought in front of apertures in the case. Above the case are spring pushes *s* carrying plates *t*, on which are marked the numbers 1, 2, 4, 8, 16, 32, which numbers appear through apertures in the case when their pushes are pressed down. The numbers in the vertical columns are so arranged that, if a push *s* is put down for every column in which a particular number occurs, the sum of the numbers displayed by the pushers will be that particular number. The movement of the plate B is caused from the handle C by the link *k* and takes place diagonally, guided by links O, O and controlled by a spring *m*. The movement brings studs *c* under the catches *u* of the pushes *s*, so that they will be held down as long as the handle C is depressed. The movement of the plate B by means of a slotted piece G and stud *x* slides a bar *z*, by which the pushes *s* are normally locked, and permits them to be depressed. Normally the plate B is locked by the catch *e* on a crank lever *f*

16

Brooman R A 361/1857 Cask Gauge

361. Brooman, R. A., [a communication]. Feb. 7.

Cask and like gauges.—A gauge, Fig. 5, for taking the internal dimensions of casks, or other vessels, consists of four graduated tubes or rods *a* connecting a head *i*, a disc *f*, and a foot i^1, and serving as guides for two sliders *d*, *c*, d^1, which may be fixed by screws *b*. Two hollow arms *h* are hinged to the foot i^1, and linked at *e* to the sliders *d*, *c*, d^1. Each arm *h* contains a sliding extension rod. The sliders *d*, *c*, d^1 may be connected together by a pin *p*. In use, the foot *i* of the gauge in its folded condition, as shown, may be passed into a cask through a bunghole in the side or end, and the arms *h* then spread by moving the sliders along the rods, their positions being read off on the graduations. A dipping tube, Fig. 12, for showing the depth of liquid in a cask or other vessel, consists of a glass tube B, provided with a stopper *h*, and enclosed in a slotted protecting tube A, with graduations.

FIG. 5.

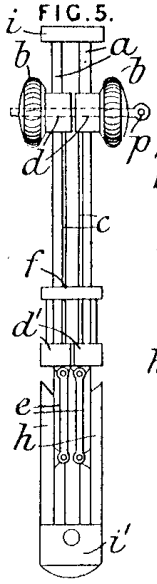

FIG. 12

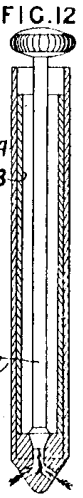

Calculating-apparatus.—The head *i* of the gauge, Fig. 5, may carry a cylindrical case containing a rolled-up calculating table, which may be drawn out through a slit.

Brotherhood R 6084/1889 Trigonometer

6084. Brotherhood, R. April 9.

Calculating - apparatus. — Relates to a trigonometer for engineers and surveyors. A board C, mounted on a theodolite stand, carries a centre scale B and a protractor D the centre of which coincides with the zero of the scale. The protractor has two pivoted arms E, E¹ provided with vernier indexes F, F¹ at right-angles. The scale is crossed by a graduated double T-square I sliding along the board. The protractor arms have graduated T-squares H and J. A theodolite telescope is mounted over the protractor centre. By means of this instrument, surveying and other trigonometrical problems can be solved without calculation, the distances on the arms and T-squares representing the real distance on a reduced scale.

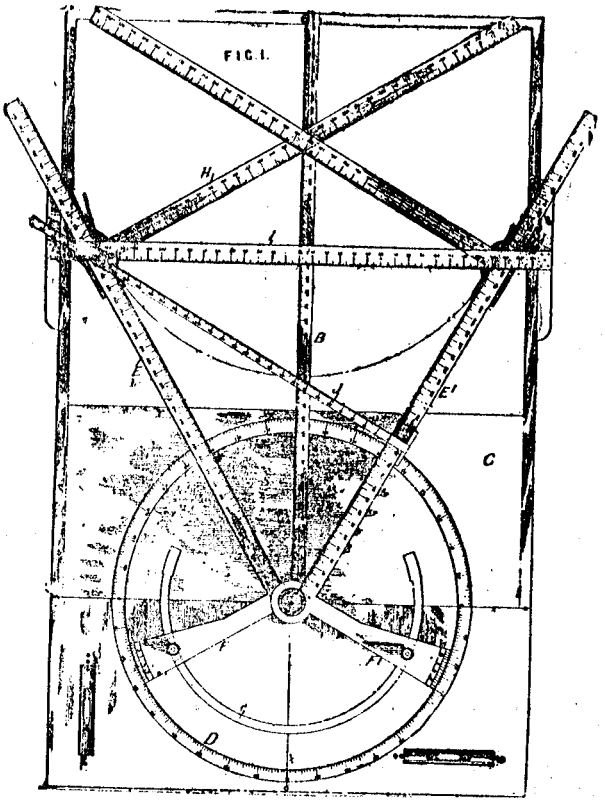

22

Brotherhood R 20088/1899 Trig problems

20,088. Brotherhood, R. Dec. 13.

FIG.1.

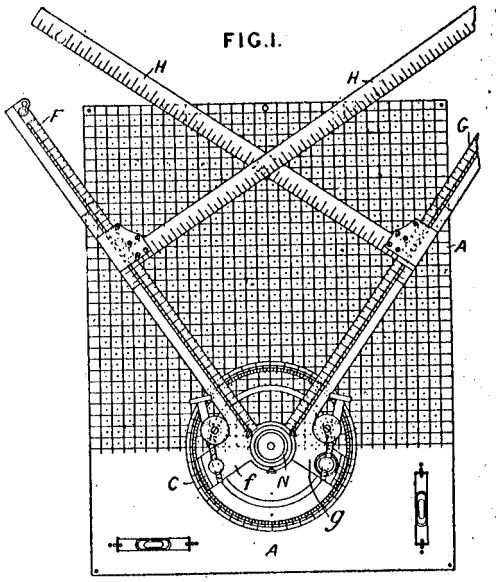

Calculating - apparatus. — Relates to improvements on the invention described in Specification No. 6084, A.D. 1889. The instrument solves graphically trigonometrical problems in ascertaining distances, altitudes, or courses, setting out railway curves, and finding radii of curves. A baseboard A carries two graduated arms F, G, pivoted at a common centre N and provided with indexes *f*, *g*, which read on a protractor C, while each arm has a graduated sliding bar H at right-angles. Instead of using on the baseboard the graduated T-square described in the above-mentioned Specification, the baseboard itself is now graduated by close cross-lines. The arms may carry sights, and the whole instrument may be mounted on a theodolite stand, with or without a telescope over the centre.

Brotherhood R 983/1892 Range finder

983. January 18, 1892. **Range-finder; fire-arms.** R. BROTHERHOOD, 5, The Sanctuary, Westminster, London.

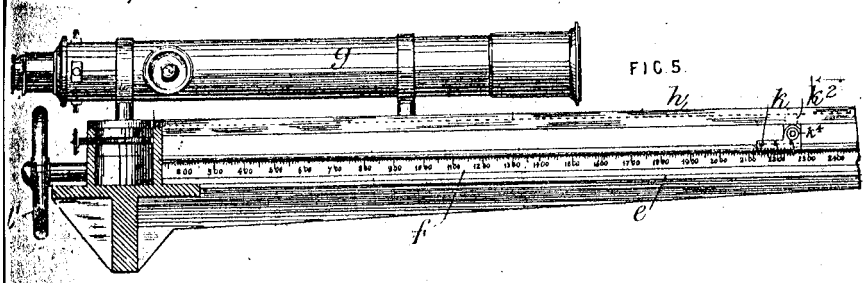

FIG. 5.

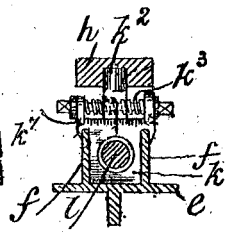

FIG. 8

Relates to range-finders, and to means of elevating ordnance and small-arms combined with range-finders. A sighting telescope or device is set at right angles to a fixed base at one end thereof, and at the other end is fixed the apparatus shown in Figs. 5 and 8. The base may be a tube mounted on a carriage, or for marine purposes a tube mounted vertically in gimbals. The telescope g is carried by a pivoted arm h below which is the arm e fixed rigidly at right angles to the base. h and e are connected by a block k sliding in graduated guides f on the latter, and traversed by a screw l turned by the hand-wheel l^1. The block k carries a stud k^2 entering a central groove in h, and this stud can be displaced any required distance from the central position by means of the screw k^3, such distance being indicated on the scale k^7. When the sighting-telescope at one end of the base has been brought to bear upon the distant object, the telescope g is turned to the object by rotating the screw l, a certain known eccentricity having first been given to the stud k^2. If n be the eccentricity, m the reading on the scale f, l the length of the base and R the range, similar triangles will give $\frac{R}{l} = \frac{m}{n}$, or $R = \frac{l\,m}{n}$. The principle may be applied to small arms, ordnance, etc. In the former case the arm with a parallel telescope takes the place of the apparatus shown, and a cam-shaped plate beneath it, working on a graduated arm projecting from the stand of the apparatus, and set at right angles to the base-line by means of sights, causes the elevation of the arm necessary for the particular range when the distant object is sighted. A similar arrangement is adopted in the case of ordnance, etc., the slewing of the gun to bring it into the correct vertical plane, automatically raising it to the correct elevation. Various modifications of the apparatus may be made; thus the means described in the Provisional Specification for directing the telescope g varies in details of construction from that shown in the figures.

Brown J L 4817/1899 Measure length & fractions

4817. Boult, A. J., [*Brown, J. L.*]. March 4.

FIG. 1.

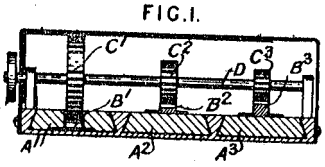

Measures of length ; calculating-apparatus.—The apparatus is for measuring lengths and simultaneously showing certain fractions of such length, such as the half and third. For this purpose, the graduated sliding rules A^1, A^2, A^3 are geared together, by racks B^1, B^2, B^3 and pinions C^1, C^2, C^3 on a common spindle D, so that the rule A^1 moves twice as fast as the rule A^2, and three times as fast as the rule A^3. Thus, if any measurement be made by the rule A^1, its half and third can be at once read off from the other rules.

Brown W 13498/1904 Multi slide rule for fabrics

13,498. Brown, W. June 15.

Slide rules.—Modifications are described in the nature and position of the logarithmic scales used in the Pickworth rule for calculating the cost and other particulars with respect to woven fabrics, the object being to have as many scales as possible reading from left to right. There are two fixed scale-bearing members X X¹ and Z Z¹, between

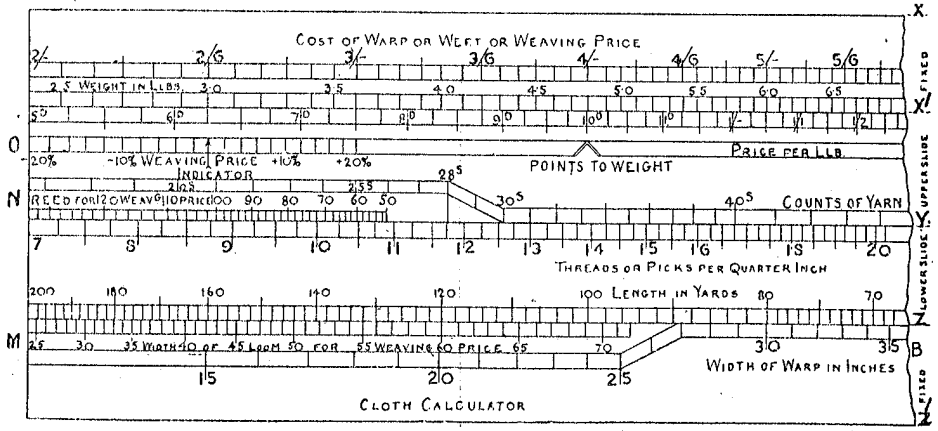

which are the two movable slides X¹ Y and Y Z. Additional scales are added to allow for variation in the width of loom, M, and in the count of reeds, N, from standard, and also for weaving-price variations O. The method of combining these scales to produce results is described. The arrangement is applicable to circular and annular types of rule.

Brown W F 12966/1915 Poly slide rule for metal sections

12,966. Brown, W. F. Sept. 10.

FIG.1.

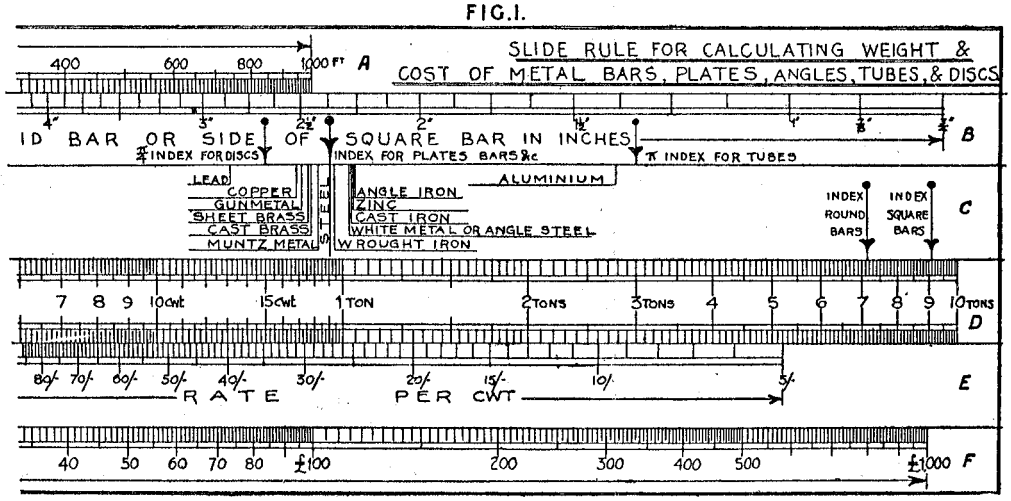

Slide-rules.—Rules for calculating weight and cost of plates, tubes, or bars, of angle, round, or square section, comprise fixed scales representing respectively length, weight, and cost, and movable scales marked to show breadth or diameter, thickness, and rate of cost, with indexes for various shapes of section and specific gravities, both being logarithmic. Fig. 1 shows a part only of the length of the complete rule, the fixed scales A, D, F representing respectively length, weight, and cost. The slide B is marked to indicate breadths or diameters as shown, and is provided with indexes for various shapes of section. The slide C has graduations for thicknesses (not shown) in both direct linear measure and standard wire gauge, indexes to represent the specific gravities of various materials and for round and square bars being also marked thereon. Rate of cost per lb. and per cwt. is shown on the slide E. A cursor may be provided.

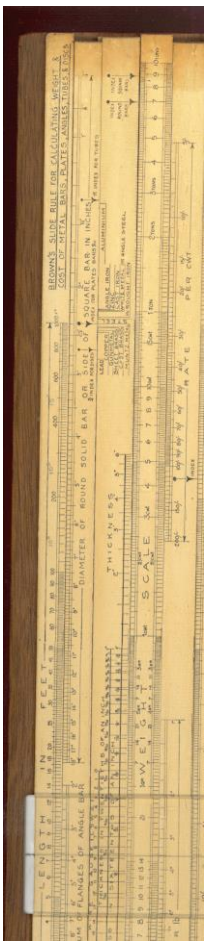

Picture BOBW collection

Browning G 21558/1894 Adder with tubes & balls

21,558. Browning, G. Nov. 9.

FIG. 3.

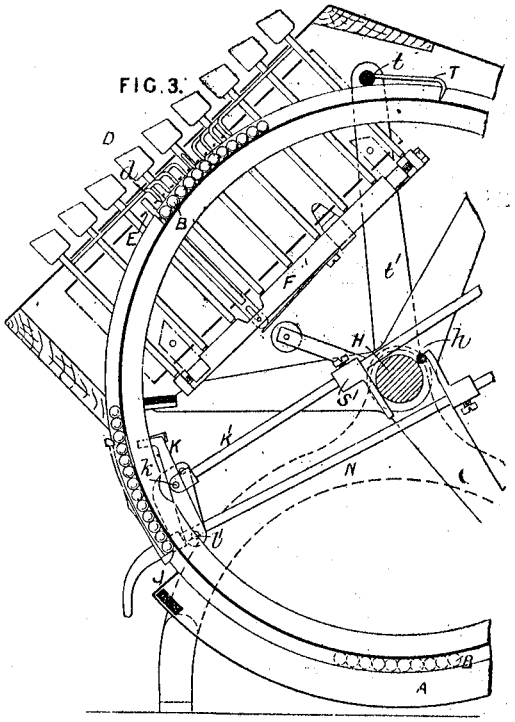

Calculating apparatus.—Relates to adding apparatus which may be adapted for simple or compound addition, the apparatus shown being for the former. A series of slotted tubes A contain balls B. Each tube has a set of nine keys D, numbered 1–9, with fingers *d* spaced apart the width of the balls and projecting into the slot in the tube. A latch E supports the balls in the position under the fingers. When any key is pressed, a pivoted plate F is rocked, drawing down the latch E and discharging the balls between it and the corresponding finger *d* which retains those above it. A latch J receives the balls discharged. After the depression of each key, the shaft H is rocked through a little more than half a revolution. The eccentric pin *h* coming against the stop S^1 throws forward the rod K^1, and so the finger K is moved on its pivot l^1 and enters a slot in the back of the tube. Should ten or more balls lie over the latch J, the finger K is stopped by the tenth, and begins to turn about the pivot *k*, drawing forward the rod N rocking the latch J, and dropping the ten balls to the bottom of the tube. Connecting mechanism is simultaneously operated to depress the unit key of the next tube, and allow one ball to fall to its latch registering "ten." The apparatus may be

179 12—2

Bruckmann H 21446/1912 ASMD Pricing utilities

21,446. Bruckmann, H. Sept. 20.

Adding and subtracting apparatus; multiplying and dividing apparatus.—A machine particularly adapted for reckoning charges for the consumption of gas, electricity, &c. is provided with sets of numeral-wheels to set out the readings at the beginning and end of a period of time, and has means to determine automatically the difference between these readings and to multiply them by the rate per unit to give the charge for the amount consumed. The readings at the beginning of the period are set on numeral-wheels 2–4 by operating setting-levers 5–7 which are provided with pawls engaging ratchet-teeth on the numeral-wheels, and which, through intermediate pinions, actuate numeral-wheels 17–19 adapted to be disengaged therefrom when a lever 172 is pulled outwards and pressed downwards, a link 176 attached thereto being slotted to receive the spindle of the numeral-wheels 17–19. Simultaneously with the disengagement of the numeral-wheels 17–19, pinions 24–26 are moved into engagement with the numeral-wheels 2–4 and the movement of these wheels to represent the final readings is transmitted to numeral-disks 21–23 which thereby indicate the difference between the two settings of the numeral-wheels 2–4. The

FIG. 2a

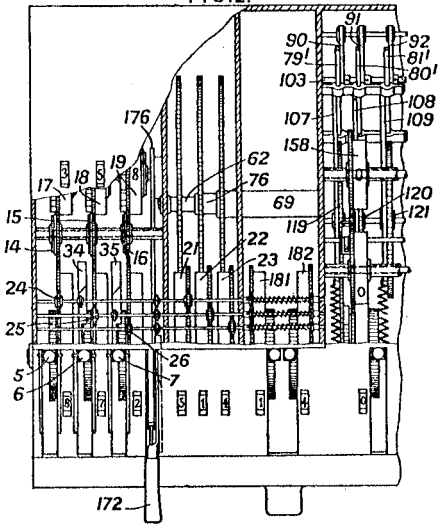

numeral-disks 21–23, through intermediate pinions and sleeves 69, 76, 62 and sets of ratchet-wheels 70, 71; 77, 78; 63, 64, transmit the movement imparted thereto to a series of stepped or notched disks 44–55. The odd-numbered disks have notches to represent the units of the product of the digits, and the even-numbered disks represent the tens of the products. The products are arranged in ten sectors around the disks, and the gearing between them and the numeral-wheels 21–23 is such that for one-quarter turn of the wheels the disks make one-tenth of a revolution. Prior to the setting of the disks by the numeral-wheels 21–23, the disks are rotated by gearing connected with numeral-wheels 181, 182, which are set to represent the price per unit of gas &c. consumed. The movement is transmitted by means of pinions 185–187, 191–193 respectively to the disks 44, 45, 48, 49, 52, 53 and 46, 47, 50, 51, 54, 55, and the ratio of the gearing is such that for one-quarter revolution of the numeral-wheels 181, 182 the disks make a complete revolution. By the combination of the above-described settings, the particular steps of the set sectors are brought opposite a series of pins 79^1–90^1 which are adapted, through pivoted arms 90–101, when a cam-shaft 103 is rotated, to engage in succession the steps and transmit the movement to levers 107–118 attached to pinions 119–130 and thereby through ratchet-wheels and pawls actuate the numeral-wheels 142–146. During this operation, pinions 157 which are in engagement with the numeral-wheels 142–146 actuate other numeral-wheels 158–162, which thus indicate the charge for quantity consumed. The pinions 157 are then moved out of engagement by operating a handle 156^a, and a second handle 169 is operated

Bryan B W 5252/1901 Planimeter for varying scales

5252. Bryan, B. W. March 12.

Calculating-apparatus.—The object of the invention is to provide a planimeter that will integrate correctly when the scale of the diagram varies at different parts. In the instrument shown by the plan and elevation in Figs. 1 and 2, the tracing-arm 1 is pivoted at 4 to a carriage 2, having wheels 6, 7 to run on rails 8, 9, to which it is kept by a weight 25, and the planimetric arm 5 turning with the tracing-arm is jointed to the subcarriage 15 which contains the integrating roller 16 and is pivoted to a fixed plate 22 on the carriage, the roller resting on a prepared long table 11. The pivot 24 of the subcarriage is not at a fixed point in the carriage, but occupies a cam-groove on the attached plate 22, the curvature of the cam being determined from the variation of the scale of the diagram by finding points at which the reading is correct for the known value of successive strips of the tracing board. The invention is also applied to instruments in which the roller is not itself graduated but moves along a smooth rod and reads a parallel straight scale. To enable a record sheet to be easily fixed, the base board has a sliding mounting board upon it, which can be clamped where desired together with the record sheet upon it.

24

FIG. 1.

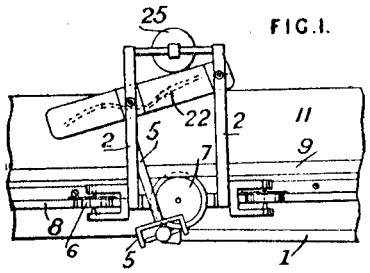

FIG. 2.

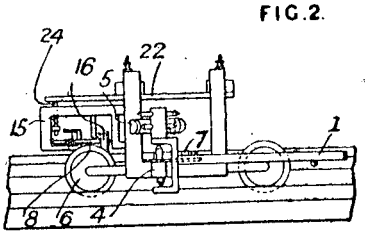

Buchan W P 1853/1879 Thickness of plates

1853. Buchan, W. P. May 9.

[*Provisional protection only.*]

Callipers, wire gauges, and computing-scales, for measuring the thickness of plates &c., have points a, a^1 at the ends of two flat strips of metal A, A^1 pivoted together at A^{11} and made of a length depending upon the multiplication of measurement desired. At the opposite end of the strip A is pivoted at a^2 a graduated segment A^2 working under an index guard a^{11}. On the segment the thickness between a, a^1 is read and much magnified. When not in use the segment A^2 is secured under a spring clip a^3. The plate A may be made with index fingers 1, 2, 3, &c. pointing to arcs 1^1, 2^1, 3^1, &c. graduated to show the weight per square foot of plates measured. A pin b is fixed in the side A^1 and passes through a slot b^{11} in the side A. It carries a milled screw b^1 to clamp the instrument in any fixed position. The graduated arcs may be fitted with segments like A^2 to extend the scope of measurement. The measuring-points may be put on the same side of the pivot as the arcs, and they may be turned outwards to measure holes. The edges of the strips may be notched as wire gauges.

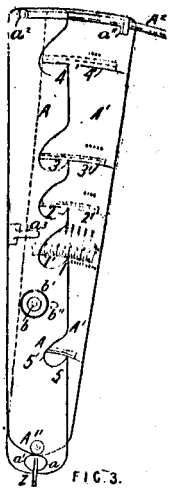

FIG. 3.

Buchanan W S 115207 of 1917 Slide rule paper making

115,207. Buchanan, W. S. Dec. 13, 1917. *Drawings to Specification.*

Slide-rules for determining the output of paper-making machines comprise fixed scales of web-speed of machine, number of reams per hour, and weight per hour, the slide having scales of deckle width and weight or substance of the paper.

Buchanan W S 121066 of 1918 Slide rule for paper

21,066. Buchanan, W. S. April 15, 1918.

FIG.3.

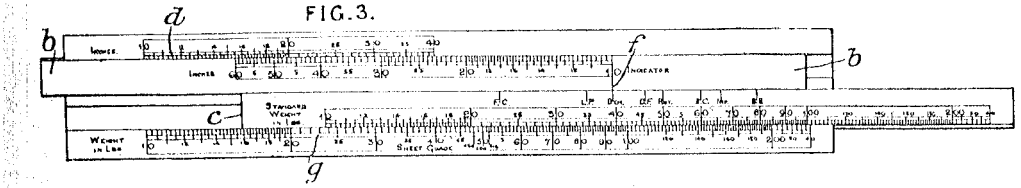

Slide-rules. — A slide-rule for calculating the weight of out-sizes (i.e. other than foolscap, demy, &c.) of paper comprises a fixed scale *d* and sliding scale *b* having an index line *f* representing the area. On a second slide *c* are graduations showing stock sizes on the upper edge, and on the lower edge a scale of standard weights reading against a scale *g* of resulting weights on the fixed part of the rule. In a modification, a fixed scale indicating the area in inches is arranged between sliding scales *b*, *c*.

85

Buchert A 11598/1912 Teach arithmetic Abacus like

11,598. Buchert, A. May 19, 1911, [*Convention date*].

Abacuses.—An apparatus for teaching arithmetic comprises movable counters which are shaped or differently coloured on their faces and are grouped in recesses in a receptacle as shown in Fig. 2. The lower part *a* contains ten counters in one division, which are to be used on the cover or lid *d*, the middle part *c* contains the counters which are normally covered by the lid and serve to represent different values or denominations. In a modified arrangement, the receptacle may be attached to a wall and the rows of counters separated by means of a longitudinal partition.

FIG.4.

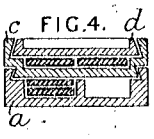

FIG.2.

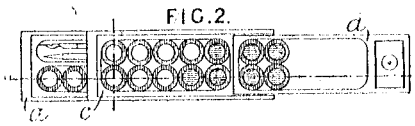

Buckle E 2610/1912 Add subtract stylus

2610. Buckle, E. Feb. 1.

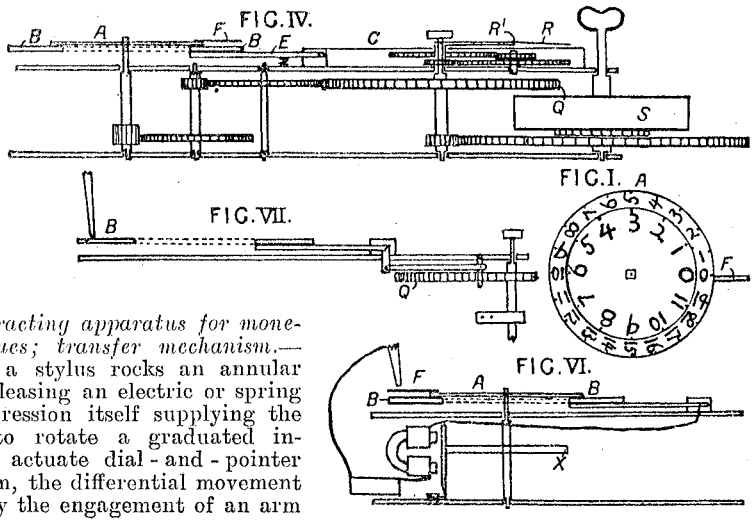

Adding and subtracting apparatus for monetary and like values; transfer mechanism.— The depression of a stylus rocks an annular member, thereby releasing an electric or spring motor, or such depression itself supplying the necessary energy to rotate a graduated indicating-disk and actuate dial-and-pointer totalizing-mechanism, the differential movement being determined by the engagement of an arm

Bucknall W 528/1731 Chrono and abr astronomical device

BUCKNAL.
30th April 1731.

528. A grant unto WILLIAM BUCKNAL, of the parish of St Mary-le-Bone, in the county of Middx, gen^{r}, his ex̃ors, adm^{rs}, and assignes, of the sole use and benefit of his new invenc̃on of a mathematical machine, in two parts, for the improvement of astronomy and navigac̃on, which is improved by applying its uses to various new problems in astronomy and navigac̃on; to hold and exercise the same within England, Wales, and town of Berwick-upon-Tweed for and during the term of 14 years according to the statute in such case made and pvided; and a clause is inserted for obliging him, by an instrument in writing under his hand and seal, to be inrolled in the High Court of Chancery within two kalendar months from the date hereof, particularly to describe and ascertain the nature of his said invenc̃on and in what manner the same is performed. Teste R^{x} ap^{d} Westm̃, 30mo die Aprilis, anno p̃d. p br̃e, &c.

A.D. 1731, April 30.—N° 528.

BUCKNALL, WILLIAM.—A "mathematicall machine in two "parts, for the improvement of astronomy and navigation."

The first part of this "machine" consists of four metal rings or circles, and of two axes or pins passing "through the center "of the whole, and when put together represent an armillary "sphere." The outermost ring moves in a groove cut in the inner or "meridian" circle, and has a handle and a pointer fixed thereon. "The equater circle" "is fixed to the meridian "by two small pins on which it turns on an axis, and thereby "when used can be sett at right angles with the meridian circle," The innermost or "ecliptick" circle moves on an axis, on the centre of which is fixed "a sight and pin which represents the "axis of the ecliptick." "In the nadir of the first or outmost "circle is fixed a compass box, and needle touched by the load-"stone, which shows the variac̃on of the compass by day and "night." "An eye glass and object-glass" may be "fixed att "a proper focus on the axis of the poles."

The above-described appliances show the hour of the day, the latitude of the place, the variation of the compass, and the difference of meridians, by means of the sun, moon, or a fixed star.

The second part of this machine is a chair or stool to steady the observer, "although the ship be moving under sail." The under side of the stool carries a concave steel box, "with the "hollow downwards." "The concave sockett" rests on a "conick "pin." The whole is balanced by means of a lead weight, which keeps the stool "always in a steady horizontall position."

[Printed, 6*d*. No Drawings. See Rolls Chapel Reports, 6th Report, p. 119.]

Buell S A 27378/1898 Calc calendar on bands

27,378. Buell, S. A. Dec. 28.

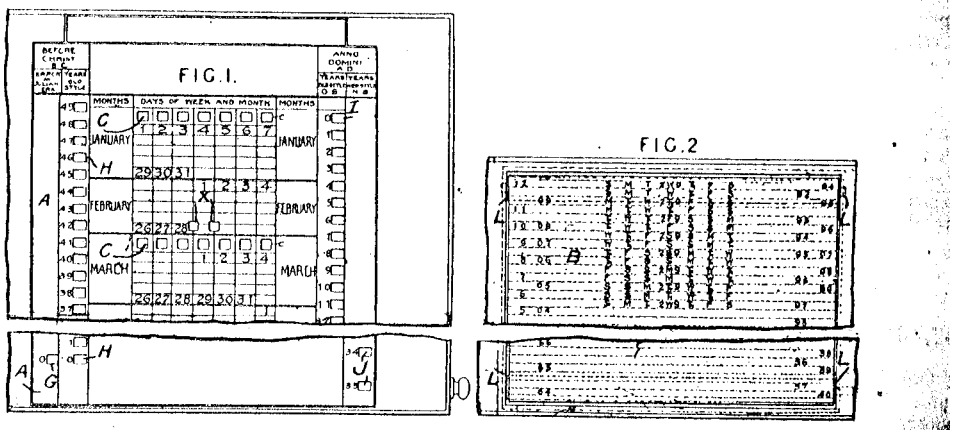

Calendars; calculating-apparatus.—Relates to a calendar and date calculator showing any year from say, 4999 B.C. to 3599 A.D. old or new style, and indicating also the error years of the Julian era. The calendar is formed of two elements, relatively adjustable so as to bring the markings on the rear elemen into view through apertures in the front, to exhibit the calendar for the year in question and for al similar years. The columns of letters and figures and the apertures are so spaced and arranged relatively that the complete calendar exhibited in any position is correct for all the years simultaneously displayed. In the form shown in Figs. 1 and 2, the elements consist of an endless band B guided accurately on

194

Buerk R 26170/1907 Adder

26,170. Buerk, R. April 24, [*date applied applied for under Patents Act, 1901*].

FIG.2

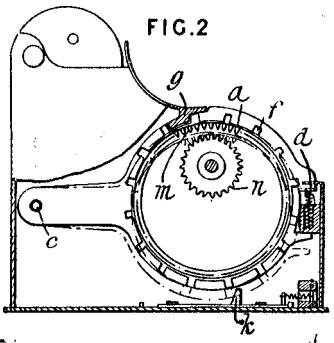

FIG.3.

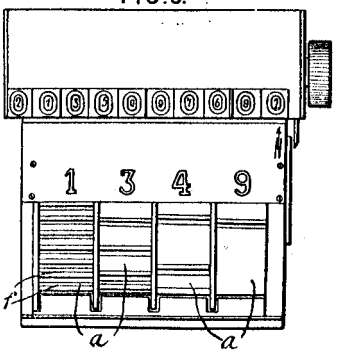

Calculating-apparatus.—In a wheel set and operated adding-machine, the master setting-wheel is actuated by successive operations of a group of four setting-wheels, each of which when passed by the finger moves bodily away from a locking device, engages with a pinion fast on the spindle of the master setting-wheel, and is limited as to rotation by an overthrow-preventing slide, whereby one operation of the same wheel always adds the same amount. There are four of these wheels *a*, Fig. 3, which at a single operation add 1, 3, 4, and 9 respectively, where from any number up to 9 can be made up. Each wheel is carried in a frame pivoted at *c* and normally pressed upwards by a spring *d*; when depressed by the operator's finger, internal teeth *m* gear with the corresponding pin *n* on the spindle of the master setting-wheel. Ribs or teeth *f* for engagement with the finger are provided on each wheel at distances proportional to the digit to be set thereby, and these are normally held locked by a fixed stop *g* from which they are disengaged upon depression of the wheel; simultaneously the teeth upon the lower side of the wheel engage with the spring-controlled overthrow-preventing slides *k*.

Bundy W Le G 9990/1898 Adder Printer

9990. Bundy, W. Le G. April 30.

Calculating-apparatus. — The apparatus is for adding a series of amounts 'set up' by depressing keys, displaying the total, printing the individual amounts in duplicate, and printing their total. Eleven keys 15 only are employed, ten of which are marked 0 to 9 and depress the cross-bar 18, carried by levers 19, different distances according to their value. The eleventh is a spacing-key and acts only on the cross-bar 18 sufficiently to move the sliding carriage 21. This carriage is shown in Fig. 6; it is guided over the face of the bar 18, at each depression of which due to any key the ratchet-wheel 24 engages a hooked pawl 26 and turns one tooth on the return stroke. The wheel 27 attached, acting on the rack 28, moves the carriage to

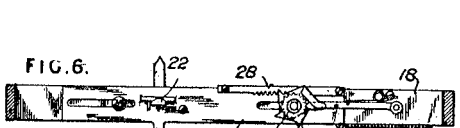

the left against the force of the spring 29 and brings a projection 22 over the next of the 'setting' levers 3, of which there are, say, five. The digits of each amount are set from the left, the spacing-key being pressed when less than five digits occur, and when the units digit has been reached, an untoothed portion of the wheel 27 comes opposite the rack and the carriage springs back to its initial position ready for setting up the next amount. The levers 3 are connected by links 4 with type-sectors 5 carrying duplicate type for printing on paper inserted at the top of the apparatus, and also on a travelling band retained within the apparatus. The levers are also linked to a pawl-carrying arm 102 by which the counting-wheels 106 are driven. After the setting up of each amount, a hand-lever is actuated, lowering the piston 44 and printing-platen 46 to take the impression. This action, through the bell-crank lever 47, operates a system of levers by which the registering-strip and inking-strips are fed, the duplicate printing-platen actuated, detents engaging teeth in the printing-sectors are released so that the sectors return to zero, and a printing-block 40 carrying, say, the list of names for a pay roll is advanced by a pawl and rack. Means are provided for operating the adding part of the machine only, independently of the printing-mechanism. The totals may be printed by inserting the paper in the lower part of the machine between the adding-wheels and a printing-platen carried by the lever 114. The adding-wheels 106 are graduated on the sloping sides of their teeth and display the total through a slit 116. The type is on the crowns of the teeth, and is so placed that the same number on the type is opposite the platen as is being displayed. Pins on the wheels actuate a pawl carrying a spring lever 109 which 'carries' to the next wheel of higher denomination when necessary. A complete stroke of any key is ensured by a pawl on the lever 19 running over a rack which prevents its return until the projection 32 on the key, striking a rocking bar 30, causes a shield to be moved forward at the side of the teeth. The shield pushes the pawl out of gear and prevents it from engaging while the lever 19 is rising; at the completion of the stroke the shield is withdrawn. The apparatus may be modified in detail.

Bundy Mfg Co 409/1903 Printing adder

409. Harrison, G., [*Bundy Manufacturing Co.*]. Jan. 7.

Calculating-apparatus. — Relates to adding-machines which print all the numbers to be added in column on a paper band, and record the sum in such a manner that the total can be printed by a single movement of the paper carriage whenever required. Parts of the mechanism are applicable to machines for printing other characters than numbers, either with or without adding-mechanism. Fig. 13 shows the machine in plan with the carriage and keyboard removed, and Fig. 3 is a vertical section. The keys 1 are arranged in eight parallel columns, each of which contains numeral keys from 1 to 9. Six of the colums are for dollars and two for cents. The machine is operated by depressing keys in one or more of the columns so as to indicate the number in question, and then turning a crank on the shaft 6 through one revolution, which effects both the printing

FIG.13.

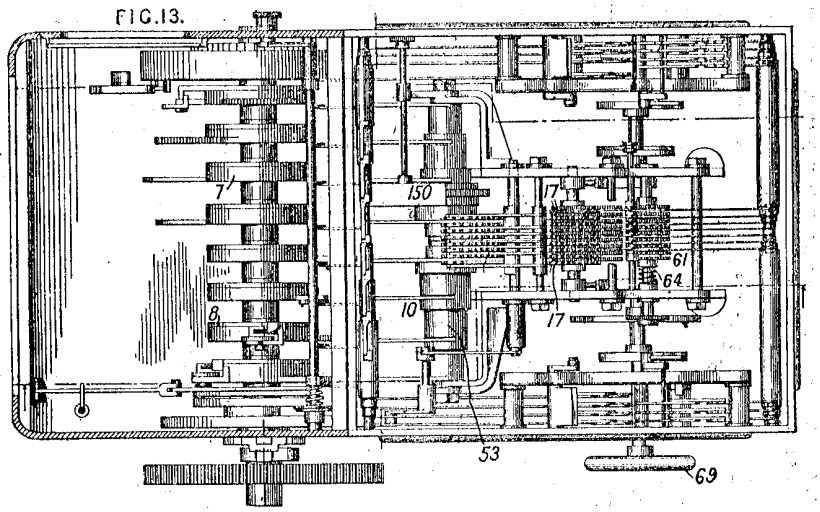

FIG.3.

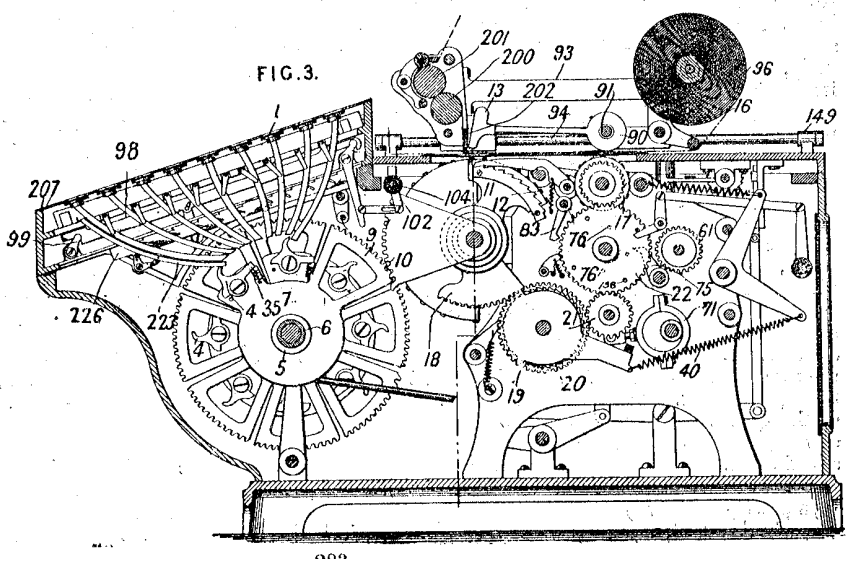

More text omitted

Bunzel-Delton-Werk 23575/1913 Multiplier

23,575. Bunzel-Delton-Werk. Oct. 25, 1912, [*Convention date*].

FIG 1.

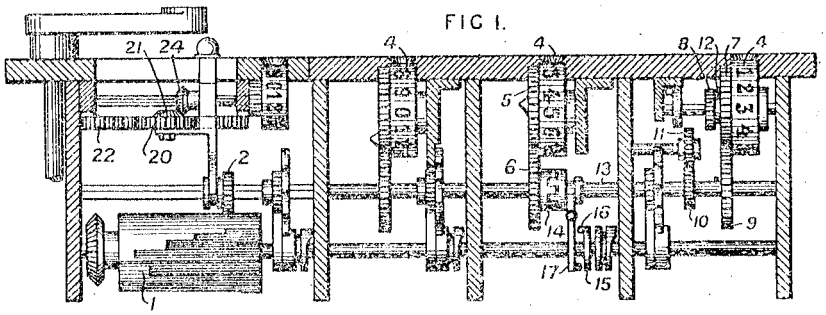

Multiplying and dividing apparatus. — In a machine for multiplying &c. by repeated addition, of the stepped-barrel and pinion type, two totalizing-counters are provided, of which the rear counter is provided with a manually-controlled reversing-mechanism for determining at will the sign of the operation performed upon it, the reversing-mechanism being positioned close to the laterally-movable rule. The actuating-connexion between the two counters is unclutched before transfer takes place upon the rear counter. The rotation of the stepped barrels 1 is transmitted in either direction of rotation to driving-wheels 2, which communicate their rotation to pinions 6 engaging pinions 5 on the numeral drums 4 of a totalizing-counter, the first set of drums 4 being provided for indicating the multiplier. The rear counter is driven either through gearing 7, 9 or in the opposite direction through gearing 8, 10, 11, the change-gear pinions 7, 8 being slidably mounted on the numeral-drum spindles so as to be movable into one or other position, or into a disengaged position, by means of a lever 12 mounted on the rule. The actuating-spindle 13 of the rear counter is connected by a clutch 14 with the spindle of the driving-wheel 2, and after actuation thereof by the stepped barrels 1, the clutch is opened by means of a disk-cam 15 upon the barrel shaft, which through an abutment 16 thereon displaces a lever 17 controlling the clutch. The numeral drums of the second counter are only driven by the sliding change-gear when it is in either of its end positions, in order that, when the change-gear is in the disengaged position, the drums may be zeroized without lifting the rule. Similarly, the other counters may be zeroized if their actuating-pinions are not fixed to the numeral drums. The zeroizing-lever may be connected to the lever 12 so that the first movement of the zeroizing-lever effects the throw-out of the change-gear. The setting of the multiplicand upon the driving-wheels 2 is indicated on numeral drums rotated by means of a pinion 20, which gears with a fixed rack 22 and is provided with a bevel-pinion 21 engaging a similar pinion 24 on the spindle of the numeral drums.

See *[7]*

Bunzel–Delton–Werk 24064/1913 Stepped barrel

24,064. Bunzel-Delton-Werk. Dec. 24, 1912, [*Convention date*]. [*Addition to* 23,575/13.]

Multiplying and dividing apparatus; transfer mechanism. — Relates to modifications of the arrangements described in the parent Specification for the purpose of providing for reversal of two totalizing-counters of a machine of the type having a stepped barrel and pinion, the transfer mechanism being specially affected. An actuating-tooth 9 and transfer teeth 10, 11 are provided, on the usual slidable sleeves rotating with the barrel shafts 2, for the quotient, first totalizing, and second totalizing counters 38 respectively. These teeth rotate transfer pinions 16 upon sleeves 14 with waved locking-wheels 15 and transmitting-gears 17 for carrying on the movement to the next higher numeral drum. The differential movement of the barrel-pinion 13 is communicated to the first totalizing-counter by the gear-wheel 20, and to the second totalizing-counter through the manually-controllable reversing-mechanism 21, 22, 27, 42, 42¹. At the transfer point, a single tooth 39 displaces a spring slide 36, and thereby permits an endlong movement of a sleeve 30 so as to carry the tens transfer tooth, connected thereto by a fork 31 within reach of the respective transfer pinion 16, 18, or 23, the parts being reset by coaction of inclined surfaces 32 with fixed pins 33. The transfer movements for the second or rear totalizing-counter are, however, communicated to the higher numeral drums thereof through a reversing-gear 23, 24, 28, 50, 51, which is thrown over simultaneously with the main reversing-gear. To make the tens transfer upon this counter independent of that upon the other, the main reversing-gear is automatically set to disengaged position during the period of transfer by means of a face-cam 49 upon the barrel shaft. This position may also be set by the reversing-handle, mounted upon the rule, in order to throw the rear totalizer out of action.

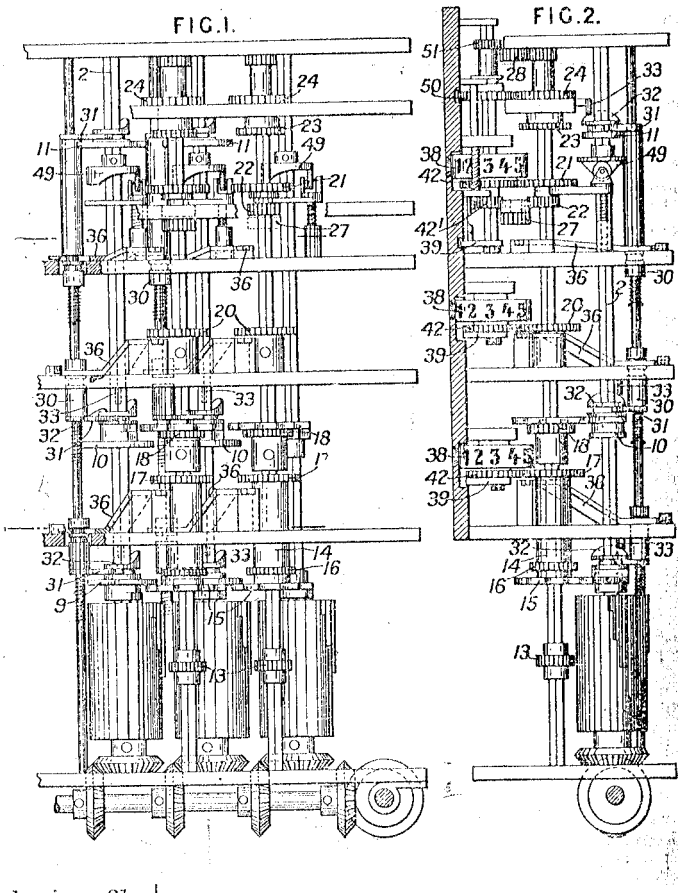

Bunzel–Delton–Werk 24381/1913 Thomas type

24,381. Bunzel-Delton-Werk. April 29, [*Convention date*].

Multiplying-apparatus; transfer mechanism; overthrow-preventing mechanism.—In a calculating-machine of the Thomas type, means are provided for locking the receiving-pinion shaft immediately after the pinion has been rotated by the actuating-teeth of the stepped driving-drum. Longitudinally movable slides are provided to allow the locking-means to be freed when a transfer is to be effected. The teeth of the driving-drum are arranged in rows spaced apart, and the spaces *a* are grooved in accordance with the number of teeth and permit the passage of a wave-wheel or brake-disk 19 secured to the receiving-pinion 13. After actuation by the teeth, the disk 19 abuts against the circumference of the drum and prevents overthrow of the pinion 13. When a transfer is to occur, a slide-member *b* mounted in a longitudinal groove of the driving-drums is moved to bring recesses formed therein into the path of the disk in any of its positions, so as to free the disk to allow the transfer devices to operate. The slide *b* is moved by means of the fork 31 of the transfer device, to which is attached an intermediate piece *h* connected to a sleeve *f* and a fork *e* engaging a disk *d* on the slide *b*.

FIG.1.

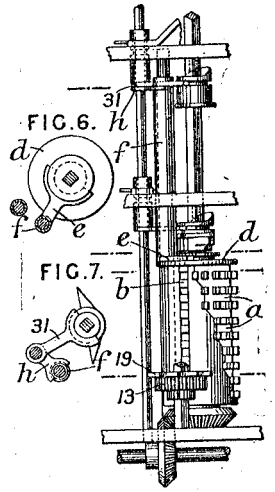

FIG.6.

FIG.7.

Burkard A 2879/1874 Ready Reckoner

2879. Burkard, A. Aug. 21. [*Provisional protection only.*]

Calculating - apparatus.— A ready-reckoner or apparatus for obtaining the product of two numbers consists of a flat box, the cover of which is formed with a transverse central slot or row of apertures and with two slots at the bottom. Two lines of figures are provided on the cover, one above each of the bottom slots. Two plates, each of half the length of the box and provided respectively with a diagonal series of square holes running from left to right upwards and with a square multiplication table having the lowest number at the upper left-hand corner, slide within the box and are provided with pointers which move in the slots in the cover. By sliding the plates until the pointers are opposite to the numbers desired to be multiplied, the product will be indicated through one of the holes in the cover.

Burkitt F G 5115/1905 Repeat add multiplier

5115. Burkitt, F. G. March 11.

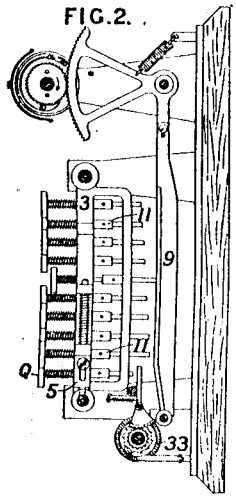

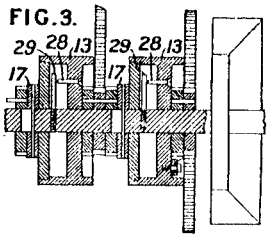

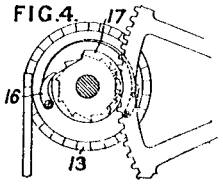

Calculating-apparatus; counting-apparatus.—In a single-bank key-set and operated adding-machine, each denomination has its own pivoted lever, the differential depression of which by plunger keys registers, and the keyboard can be moved transversely to co-operate with any lever. Multiplication and division are effected by repeated operation, an additional key is provided for registering quotients in division, complementary numbering is adopted for the keys and number wheels, and the totalizing-counter, which has a self-contained transfer mechanism, is zeroized by rotation of its spindle. Fig. 2 shows the keys in their movable frame 3, the key-stops 11 upon the shanks, and the locking piece 5. The pivoted lever 9 actuates the counter-wheels by a toothed segment, each pinion having a ratchet connexion with its number wheel 13, Fig. 3, and the transfer parts, Fig. 4, which consist of a spring pawl 16 on the lower wheel, fixed recessed cam 17 on the shaft, and ratchet-wheel on the higher element. To zeroize, the spindle is moved by hand longitudinally in opposition to a spring until it clears a locking-notch, so that when rotated the pins 28, 29 may engage and carry the wheels round. The quotient key Q operates by means of segments a similar counter 33 unprovided with transfer mechanism; there is one segment and wheel for each denomination, and the key is depressed once for each depression of a number key. Means may be provided for checking overthrow on the counter-wheels, and there may be a keyboard for each denomination. The screen through which the totalizing-counter wheels are read is movable sideways

to display either the addition or subtraction numerals.

Burroughs 8261/1912 Add Avoirdupois weights

8261. Burroughs Adding Machine Co., and **Terry, G.** April 4.

FIG.I.

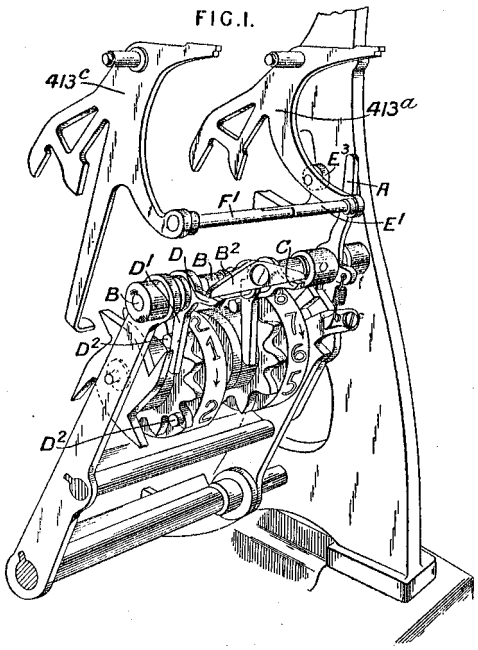

Adding-apparatus for avoirdupois weights; transfer mechanism.—A Burroughs machine adapted to compute avoirdupois weights is provided with an arrangement whereby the carrying to the wheel of lower denomination is effected by the normal or upward carrying movement of a transfer pawl; such carrying operation is necessary, as described in Specification 24,565/11, when, after the registration of '2' on the tens of pounds wheel, (1) '8' is to be registered on the units of pounds wheel or, (2) '1' is to be added to the tens of pounds wheel. (1) When '2' appears on the tens wheel, a pin D^2 thereon engages the end of a bell-crank lever D^1 and raises the other arm D to engage a cross-head B^2 on an arm of a shaft B. Depression of the '8' key in the units denomination in a similar manner raises an arm C to rock the cross-head B^2 and with it the shaft B sufficiently to cause a finger A to engage a stud E^3 on the pawl 413^a, thus disengaging it from a stud on the rack to allow the rack to effect a carrying-on to its corresponding wheel to the extent of two units. (2) In the second instance adding '1' to the tens denominations will rock the pawl 413^c and, by means of a projecting pin F^1 thereon which engages a similar pin E^1 on the pawl 413^a, will rock the latter pawl to allow a carrying-on to the units wheel. If nineteen units have been registered and it is desired to add another nine, the rock-shaft B and finger A will clear the units wheel to zero, and a device similar to that described in Specification 24,565/11 may be employed to effect a double carrying-movement on to the tens wheel, so as to bring it to the zero position and add one to the next higher wheel.

Burt E A P 4359/1887 Slide rule cubing timber

4359. Burt, E. A. P. March 23.

Slide-rules; measures of length.—Relates to slide-rules for cubing timber and for like purposes, and is an improvement on the old slide-rule as used by H.M. Customs Department, the features of novelty being (1) a number of gauge points marked with brass pins on one side of the rule for finding the cubic contents of trees or round wood by either the "quarter girt" or "diameter" methods of the "Customs" or "Hoppus" systems; (2) gauge points marked on the other side of the rule for obtaining the superficial measurement of logs, planks, &c., when reduced to the uniform thickness of one inch; and (3) a measuring-attachment consisting of two hinged bars A and B, of which A is stationary, while B can be slid along the rule to take the dimension of any article.

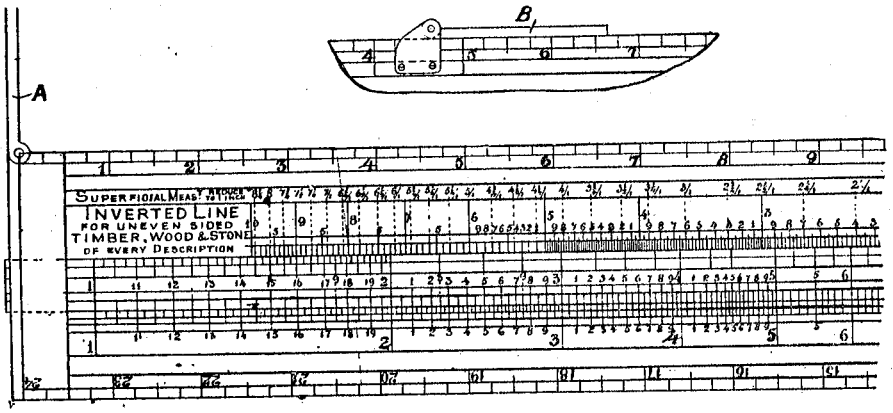

Burt E A P 12516/1909 Slide rule cubing timber

12,516. Burt, E. A. P. May 27.

FIG. 1.

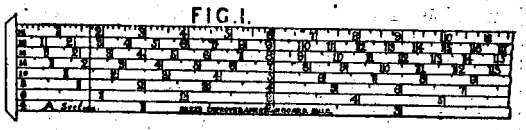

Surface-areas, computing.—A measuring and calculating rule of the type described in Specification 3073/09, is adapted to give the superficial area of boards, deals, &c. in British measurement. The sides of the rule are marked with the scales to represent the areas of boards of lengths from one to twenty feet and of widths from one-eighth of an inch to thirty-six inches. The side of the rule marked with the even numbers of feet lengths is shown in Fig. 1.

9 D

Full patent says Burt was Chief Measurer, Surrey Commmercial Dock, Port of London Authority.

Burt E A P 3073/1909 Tabular calculator

3073. Burt, E. A. P. Feb. 8.

FIG. 1.

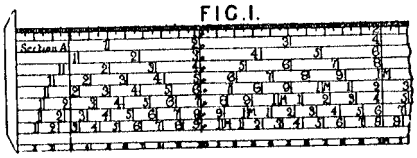

Tabular calculators. — A measuring-rule, one metre in length, is subdivided in the usual manner, as shown in the upper part in Fig. 1, and is provided with additional scales, the subdivisions of which have twice, three times, and so on, the numerical value of the corresponding subdivisions of the metre scale. To measure the area of planks &c., the length is measured in the usual way by means of the metre scale, and the rule is then placed across the plank so that a hook or projection on the left-hand end engages with one side thereof. Where the other side cuts the particular scale which corresponds to the length of the plank, the area of the plank may be read off. Scales of equivalents of linear, square, and cubic feet &c. in the metric system are provided on the scale.

Burt E A P 23620/1914 Measuring & Calculating Rule Tab calc for timber

23,620. Burt, E. A. P. Dec. 5.

Tabular calculators.—In a rule as described in Specification 12,516/09 for determining the area of timber &c., scales are added respectively having graduations marked at one-foot and six-inch distances to deal with articles one and two feet long. The rule is provided with a flange as shown to engage one edge of the board &c. to be measured, and with a slide to engage the other edge, the slide being marked with the numerals appearing at the graduation one foot from the flange.

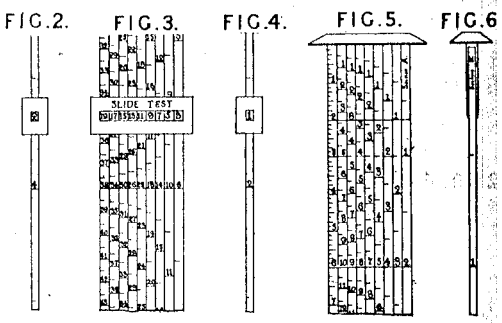

Butterfield E A 13416/1898 Calculating time table

13,416. Butterfield, E. A. June 16.

Calculating - apparatus. — Time tables are formed with the numerals or words indicating the hours in a central column such as A, Fig. 1, the numerals denoting the minutes being to the right and left of it, and intended to be read with the hour in line with them. The invention is stated to be applicable to mathematical tables.

FIG. 1.

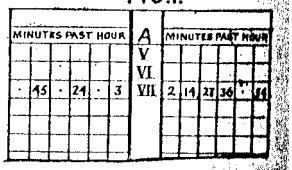

Caink T 9975/1903 Proportional scales

9975. Caink, T. May 2.

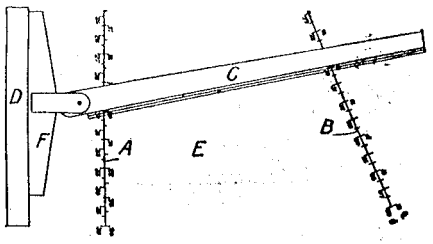

Calculating-apparatus. — The cost of private street improvements is apportioned tc frontages of different lengths by the proportional scale shown. Two scales, one of lengths A and the other of monetary values B are drawn upon cardboard E and meet in a point. To the cardboard is also fixed a straight-edge D for a square F with a blade C adjustable at an angle and having a projecting celluloid edge with a reference line marked thereon, so that when the blade is set at the angle corresponding to a given cost per unit length of frontage, the actual cost for any given length of frontage may be read off by setting the reference line to that length.

Callender's Cable 24944/1902 Adder

24,944. Callender's Cable and Construction Co., and **Hastings, H.** Nov. 13.

FIG.1.

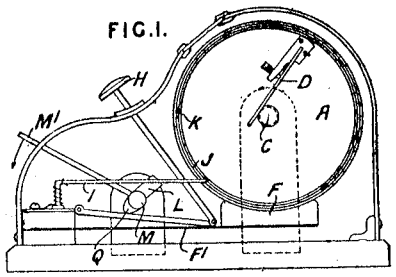

Calculating-apparatus.—An adding machine consists of a number of suitably-graduated co-axial discs, each revoluble independently of the others but each connected when it rotates with another disc, so that the latter sums up all the separate movements. Each disc A has fixed to it a spring D which bears on the spindle C, having at its extremity a handle for turning the system of discs. The discs tend to revolve with the spindle but are normally prevented from so doing by the brakes F on springs F^1, which brakes are removed when the buttons H are pressed. On pressing the lever M^1, the cam Q on the shaft M removes the brakes F and the series of discs can then be brought to the starting point, when the hooked ends of spring rods I enter into holes K in the groove J, this being normally prevented by inclines L which are fixed to the shaft M, but which, on turning the lever M^1, cease to act.

Callender's Cable 27683/1906 Slide rule for cable

27,683. Callender's Cable and Construction Co., and **Ackery, A. P.** Dec. 5.

Slide-rules for computing the size of electric cables, or for solving similar mathematical problems. A square or diagonal chart G is laid out with logarithmic scales along the edges, and the corresponding points are joined by lines which are numbered and give the size of cable &c. Along the top and left-hand side, slide pairs of scales D, B and A, C; the scale D has logarithmic scales to the edges, one reading length against a fixed mark F^1, the other volts against a mark B^1 on the second slide B, the opposite edge of which is logarithmically divided to show power, as kilowatts. To the left, the slide A is set with the mark A^1 at the system employed as shown by the scale E^1, E^2, and has a "power

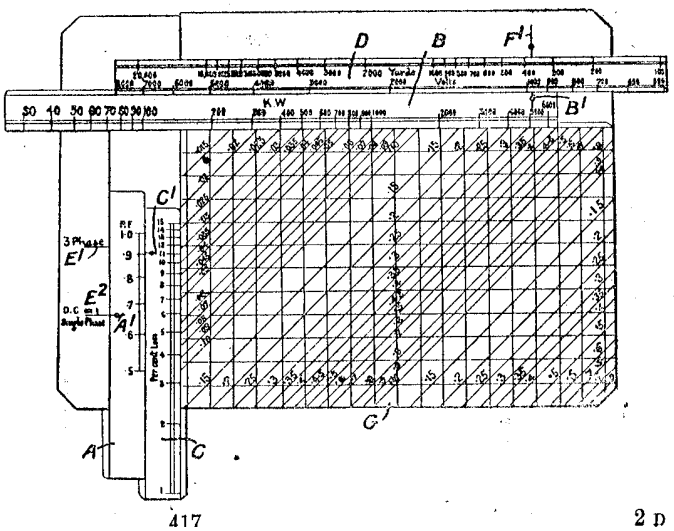

417 2 D

"factor" against which a mark C^1 on the slide C is set, the latter having a logarithmic scale for the "percentage loss." The intersection of horizontal and vertical lines on the chart G, corresponding to the given readings on the slides B, C, gives the diagonal line corresponding to the required size of cable.

Callenders' Cable 7269/1915 Slide rule for electric calcs

7269. Reid, W. D., and **Callenders' Cable and Construction Co.** May 14.

Slide-rules for electric calculations have all the scales similarly graduated but marked with different values. The scales A, B on the stock read respectively amperes and size of cable. Each scale on the slide represents two quantities; thus the scale C shows horse-power transmitted and permissible voltage-drop, and the scale D reads the working pressure and the distance of transmission. When using the horse-power and working-pressure scales, the slide is reversed. On the scale B, graduations are also shown representing the power consumed by lamps, and for calculating horse-power in direct-current circuits and in single, two, and three phase alternating-current circuits having various power-factors.

FIG.4.

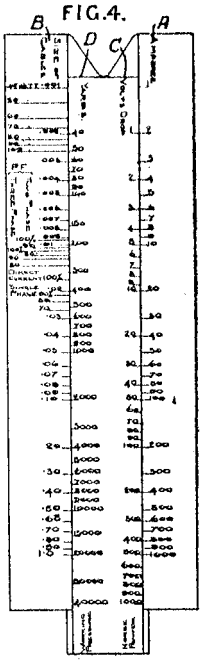

Canale J 1427/1881 a board for contents of cuttings etc.

1427. Imray, J., [*Canale, J.*]. March 31.

Calculating-apparatus for measuring the contents of cuttings, embankments, &c. A metal plate X has straight grooves a^1, a^1 along its sides and two grooves a^2, a^3 at one end, in which move

141

slides c, c^1, c^2, c^3. The plate is divided as shown into millimetres, and on it are placed graduated rules b to represent earthwork slopes. The vernier d is divided on both sides ; one, to suit the inclination, is applied to one of the rules b. The long rule e, which can be set to represent the natural slope of the ground, is pivoted at f on a slide g, carrying a vernier scale, the point f being at a known distance from the centre line of the section, which centre line has a vernier scale h running along it. The columns i and j are divided for heights. Assuming there is a half section of a cutting 7 metres deep and 4 metres wide at bottom in ground sloping 0·40 per metre with slide slope of 45° place h at 7 and g at 8 : the intersection of e with the first rule b shows 10 as the width on the vertical line of the plate, and 8·48 as the face of the slope on the rule b. The intersection of e with the second rule b gives results for 17 metres depth, and so on, increasing 10 metres for each rule. For computing areas a set-square is fitted to slide on e, its base having a vernier scale of 99 millimetres divided into 100 parts. Its perpendicular is divided into 20 centimetres. The two first divisions are subdivided to millimetres, so that a vernier operated by a screw can work with them. To find the product of 56·32 by 8·57 the zero of the base is set at 563·20 on e, and e is moved till 10 on the side coincides with k^1 and then set by a pin. The set-square is now moved until 8·57 on the side coincides with k^1. The zero of the base will indicate the product on e. The inverse operation of division can also be performed.

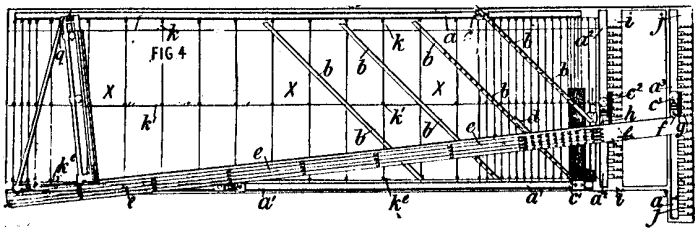

© B O B Williams Printed22/11/2023 CalcPatents Ed. 1.doc

Canale J 4218/1880 Multiplier to calc volumes

4218. Imray, J., [*Canale, J.*]. Oct. 16.

[*Provisional protection only.*]

Calculating-apparatus for computing volumes.—The first part consists of a rectangular plate or frame having vernier slides with clamping-screws sliding, in graduated grooves, along each side and one end ; there are also at one end two similar slides on perpendicular graduated guides. Straight graduated rules are pivoted to the slides so that they can be set at any required position and angle representing, for example, the slope of a cutting or embankment. A model profile is thus obtained which can be divided by means of the other rules, and dealt with arithmetically or by employing the second part of the apparatus. The second part also consists of a rectangular plate or frame having vernier slides with clamping-screws sliding along its graduated sides. A straight rule pivoted at one end of the plate or frame is set to cross one of the side scales at a given point, and by sliding a graduated transverse guide bar to meet it at a point marked by a slide the product of two numbers can be read off one of the side scales.

Carey S 13855/1894 Navigation at sea

13,855. Carey, S. July 13.

Calculating apparatus for nautical purposes. A quadrant of a circle A, D is divided into points and degrees with sub-divisions, and the edges A, B C, D into 90 parts standing for degrees or miles. An arm E, F also divided into 90 parts is pivoted at the centre, and carries a sliding graduated arm G, H, which, when in use, is placed at right angles to the edges. A method of use is described in the Specification by which, it is stated, the change of latitude and so the position of the ship may be found from certain known data.

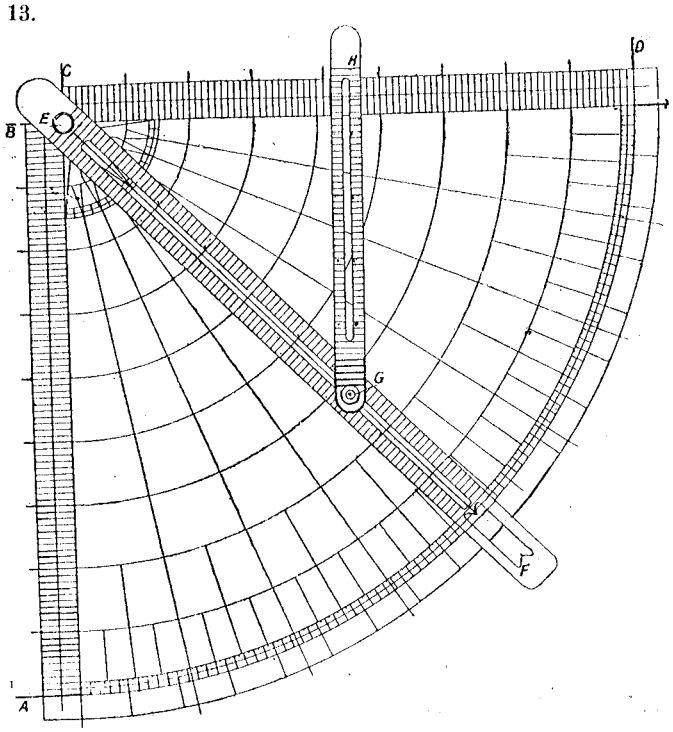

Caron P J E 11928/1901 Slide rules in tool handles

11,928. Caron, P. J. E. June 11.

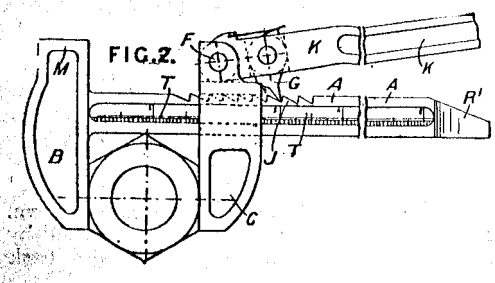

Slide rules; measures of length.—These are riveted in grooves in the handle A of a combined spanner or wrench, hammer, and screwdriver.

The sliding jaw C, which may carry a vernier is fixed by a lever K which forces the pawl G against teeth J on the handle.

Carter W C 13041/1885 Slide rule for boiler makers

13,041. Carter, W. C. Oct. 29.

Calculating-apparatus. — A slide-rule has two slides B^1, B^2 held by brass plates to the fixed parts A^1, A^2. The various parts are graduated with logarithmic scales adapted for solving the equations for steam-boiler and other rivet work. The slide B^2 is reversible, the back being graduated as shown in Fig. 2.

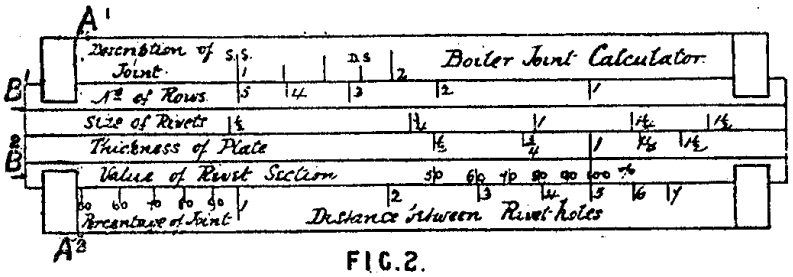

FIG. 2.

Thickness of Plate					
Pitch					

Poly slide rule See [15]

Caws F 5513/1885 Ship design

5513. Caws, F. May 5.

Calculating-apparatus. — Relates to apparatus for determining the relation between the speed and resistance of a ship or of other moving bodies. In the tank A is a model of the vessel, which is drawn forward by a weight B connected with the model by the string C. This string passes round a pulley at the end of the tank and over antifriction wheels D. The time of the experiment is estimated by observing the distance descended by the weight E checked by a counterweight F, the two weights being connected by a string G passing over antifriction wheels H. To ensure the motions commencing simultaneously, the counterweight F is fastened to the back of the model by a string which is severed, when required, by burning. When the weights B and E strike the adjustable brackets K

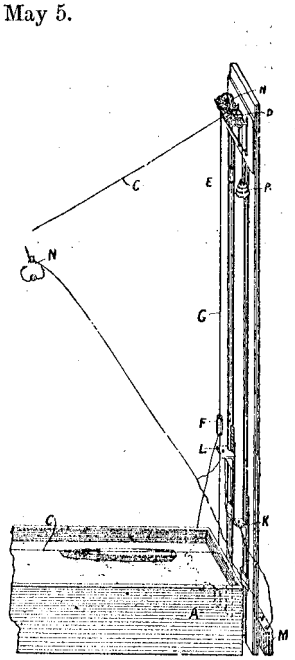

Chambon C L 4131/1879 Days between dates

4131. **Lake, W. R.,** [*Chambon, C. L.*]. Oct. 11.

FIG. 1.

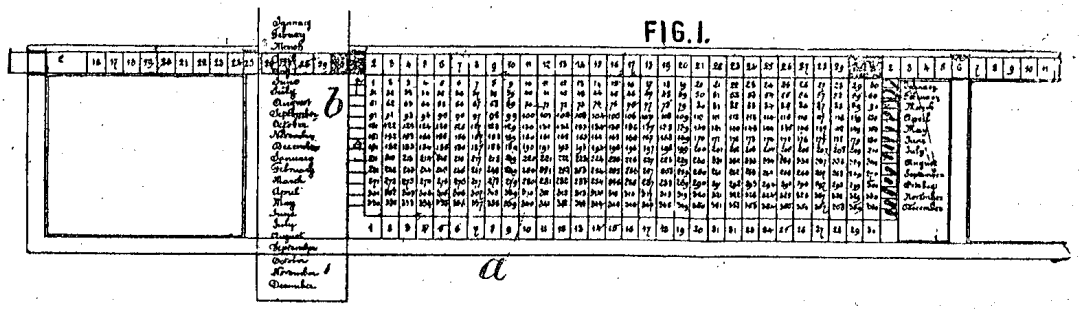

Computing-scale for calculating the number of days between two dates, for either the fiscal year of 360 days or the civil year of 365 days. Upon a sheet of cardboard *a* are marked in twelve rows all the figures

Champeix & Champeix 14589/1910 Tab calc

14,589. Champeix, L. T., and **Champeix, E.** June 17, 1909, [*Convention date*].

Multiplying-apparatus; tabular calculators.— An apparatus for comparing the equivalents of weights, measures, or money in different systems is shown in Figs. 1 and 4 as applied to the conversion of francs into piastres, and vice versa. A series of cylinders mounted in a frame have marked thereon two series of numerals from 0 to 9 exhibited through openings K and displaced relatively to each other through five units, so that both sides of the apparatus may be used. In column with this series of numerals are other numerals *l*, which correspond alternately to the value of a numeral of one or other of the series appearing through the openings K. The alternate numerals are shown through openings L on one side of the cover-plate H, and the other numerals are shown through the opening on the other side of the apparatus. Two holes P, R in the frame are marked francs and piastres respectively, so that, on the setting of the cylinders by the knobs *b* to the amount in francs, the corresponding values in piastres can be read off in the holes L. To facilitate the reading and adding of the values, the cover is divided by lines O, and the position of the decimal point is indicated by a thick line M. To hold the

FIG. 1.

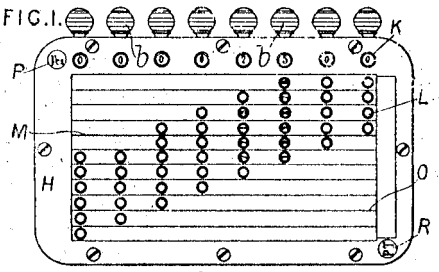

FIG. 4.

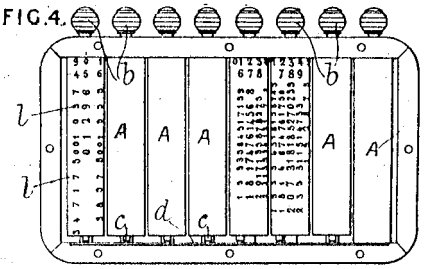

cylinders A in the zero position, each is provided at its end with a spring-controlled pin *c*, which engages notches in a plate *d*.

Charpantier J V 7976/1886 Tab Calc

7976. Charpantier, J. V. June 15.

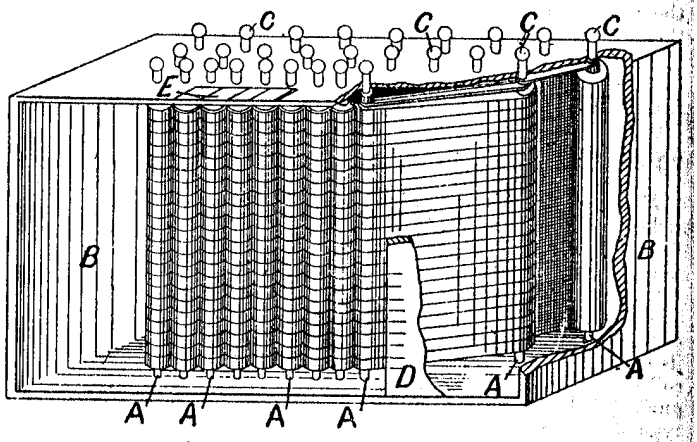

Calculating - apparatus.—Relates to multiplying-machines. A series of sheets of paper or linen are stretched round rollers A, A, A in a case B, and so guided that they come close together at the front of the case. Handles C, C, C are provided by which the rollers may be turned to bring forward the parts of the sheets required. The sheets are divided into horizontal and vertical columns, the nine lowest of which register with the divisions on a table D marked 1–9. These horizontal and vertical columns are filled in with numbers in such a way that, when the digits of any number are brought forward in a particular manner on the various sheets opposite 1 on the table D, the result of the multiplication by the remaining numbers 2–9 can be read off opposite those numbers. Certain difficulties arise in the higher numbers on account of numbers to be "carried"; a reference book is provided to meet this, to which the operator is directed by letters which appear in certain divisions on the sheets. An indicator E is also used to guide quickly to the correct section of the book corresponding to the particular roller in question.

CharpantierJ V 18541/1886 Tab calc interest

8541. Charpantier, J. V. June 29.

Calculating-apparatus.—The instrument is used for determining interest, discount, date of maturity, &c. of bills of exchange and the like. Within a case A are mounted on rollers two broad paper strips B, C brought forward by guides so as to come close against the edge of an indicator bar D. Partly in front of the lower strip C is a board E. The strips and board are divided into horizontal and vertical columns, the latter registering with the sections on the indicator bar. In the left-hand vertical column of the strip C are the days of the year, and in the horizontal columns the corresponding dates of maturity, with or without days of grace, for the usual periods; these periods are marked in the division of the bar D. Upon the board E are marked corresponding days of interest and discount, and special circumstances are allowed for in the various horizontal columns which are lettered to refer to letters in the sections of the maturity table. The strip B is marked with interest and discount tables.

(*For Drawing see next column.*)

8541.

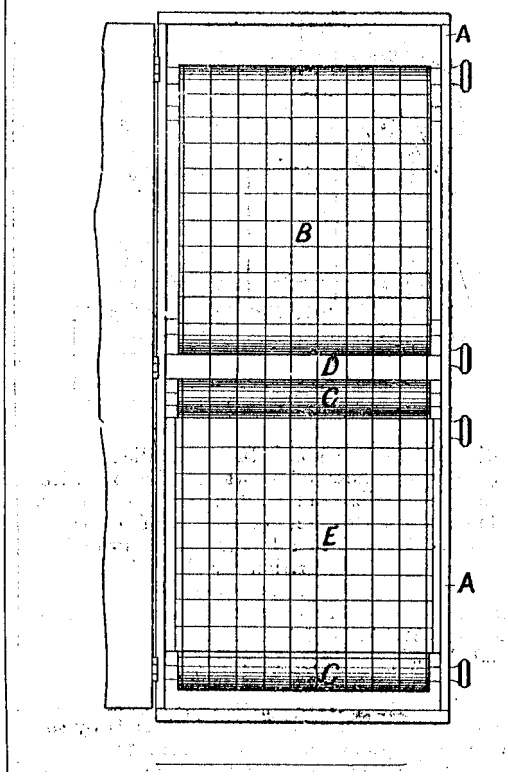

© B O B Williams Printed22/11/2023 CalcPatents Ed. 1.doc

Charpentier--Page G 2119/1882 Circ Slide rule

2119. Boult, A. J., [*Charpentier-Page, G.*]. May 5.

[*Provisional protection only.*]

Slide rule and computing scale.—This consists of an outer and an inner disc between which moves an annular graduated disc. The principal dial and annular disc have scales for calculating proportions &c., and the central dial indicates the roots. At the back of the circular disc are logarithmic, sine, and tangent tables, which are read by means of a runner at the back of which there is an index.

Measures of length; speed indicators.—Various apparatus, such as a spring-tape measure or speed measurer, may be mounted either between the faces of the dials or on the reverse side of the slide-rule.

Abridged also in Classes *Philosophical instruments; Watches &c.*

See[17]

Chateau Freres 101013 1915 Odhner type

101,013. Chateau freres. July 29, 1916, [*Convention date*].

Multiplying and dividing apparatus.— In calculating-machines of the Odhner type having cam-disks &c. and pin-wheels and adapted for calculations according to the four rules, two sets of numerals, complementary with respect to 9, are arranged in alternation on each numeral wheel, as shown on the developed surface in Fig. 1, so that a pair of figures is always visible in each reading-aperture. The sets may be differently coloured in order that the particular set to be read, according to the nature of the calculation made, may be readily distinguished. The invention is described as applied to a machine having two sets of apertures, one giving the product of a multiplication and the other the figures of the second factor, as it is registered by the rotations of the handle. By means of a double setting of the first factor, results of the kind : $a \times b$; $a \times (1—b)$ can be produced simultaneously, subject to the unit error in the lowest denomination in one of the two cases.

FIG. 1.

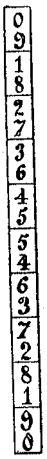

The Specification as open to inspection under Sect. 91 (3) (a) comprises also the employment of more than two sets of numerals on each wheel, with a relationship other than that described above, and reference is made to French Specification No. 469,303. This subject-matter does not appear in the Specification as accepted.

Cheape J A 12025/1898 Device for photo exposure

12,025. Cheape, J. A. May 26.

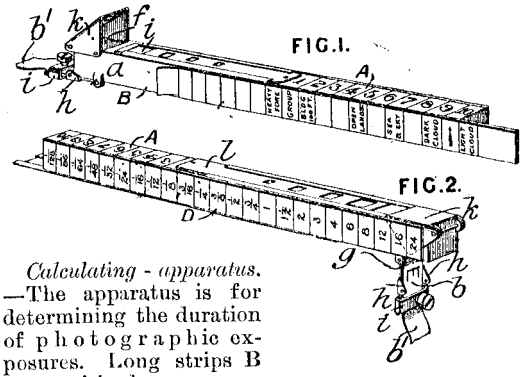

Calculating - apparatus.—The apparatus is for determining the duration of photographic exposures. Long strips B of sensitized paper are stored in a box *a* and exposed, through a stencil plate, in an end chamber *f* into which the light is directed by a mirror *k* which can be set at various angles to regulate the intensity. The mirror may be turned back so that the light acts directly, or it may be carried by a collapsable tube for regulating the intensity, or a slide *l* with 'stops' of various sizes may be employed for the same purpose. The top A of the box is marked with a scale denoting rapidity of plate, and the side D with a scale for the time of exposure. On the other side B and bottom are slides giving physical and other conditions of the photograph, and two scales showing time in which the test paper colours and the 'stops' used in the camera respectively. Another method of determining the actinic power of the light is to reverse the sensitized paper and have a small aperture in the bottom of the test chamber half covered by tinted paper. The end b^1 of the test paper is passed through a hinged paper carrier *g* with spring catches *h* and paper clamp *i*.

Cheape J A 12972/1909 Add Subtract Endless band

12,972. Cheape, J. A. June 2.

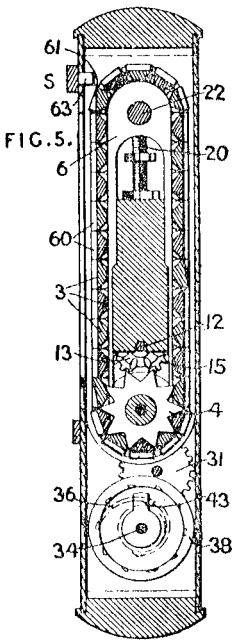

FIG 2.

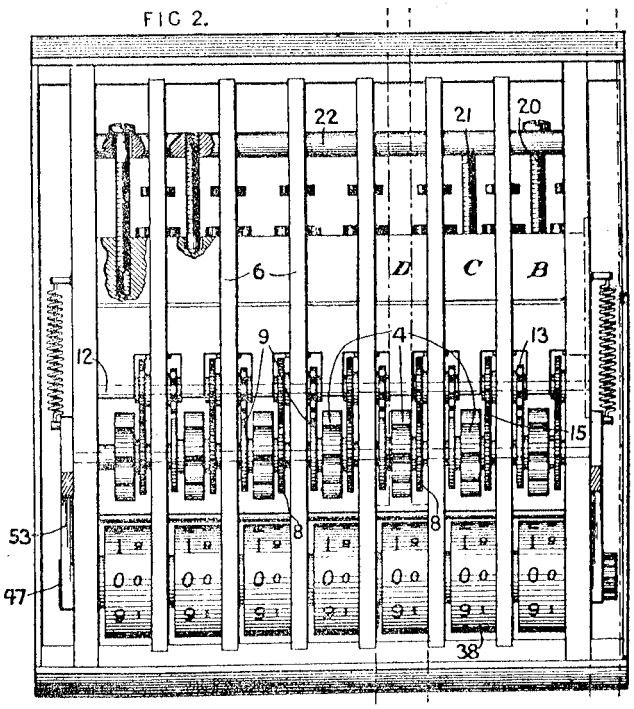

Adding and subtracting apparatus; displaying items. — Relates to machines for adding or subtracting, of the kind in which the setting-means is an endless band, manually operated according to a scale and constituting the totalizer and in which the item wheels are reset after each actuation. The setting-member for such denomination consists of a number of disconnected buttons 3 guided in races in the partitions 6 of the casing and cut on the inside so as to gear with guiding star-wheels 4. The numbers are carried on the left-hand side of the buttons and exhibit the total in an aperture offset from the bottom of the setting-slot, against which a scale is placed on the casing. Reversed scales may be provided to facilitate subtraction. To exhibit the amount set, drums 38 on a countershaft have reversed sets of digits, and are moved by gearing 31 from pinions on the hubs of the star-wheels 4.

FIG.14.

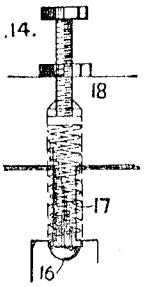

Transfer mechanism.—The star-wheels carry one-toothed disks 9 and pinions 8 for effecting and receiving the transfer respectively. Transfer is accomplished through a countershaft 12 which carries the necessary wheels in sets of three, pinions 13, 15 and an intermediate justifying star-wheel engaging a ball 16, Fig. 14, pressed by an adjustable spring 17. The partitions are assembled by a transverse bar 18 grooved to take them, they being cut out to admit the bar, which is then raised to engage the narrowed portion of the slots. The bar carries the spring-pressed balls, and is adjusted in position by screws 20, 21 engaging the bar and a cross-bar 22 respectively.

Zeroizing-mechanism.—The drums 38 are frictionally engaged by springs 36 secured to the hubs of their actuating-pinions, and are zeroized by studs thereon being engaged by hubs 43 on the spindle 34. The spindle is rotated by racks 53 attached to an external cross-bar engaging ratchet-wheels 47, one of which has a cam recess to engage a pin, so as to move the spindle endways against the action of a spring and thus bring the arm 43 into the path of the studs on the drums 38. To zeroize the totalizing series of buttons, a slide S is provided with tongues 63 to pass through grooves 60 in the buttons until they meet the edges of the zero buttons 61, which are thus brought back to position. The zero buttons are grooved on an incline as shown in Fig. 5 to permit the return of the slide 63 out of the way of the buttons.

Cheape J A 14901/1912 Adder for £sd

14,901. Cheape, J. A. June 26. [*Cognate Application*, 27,083/12.]

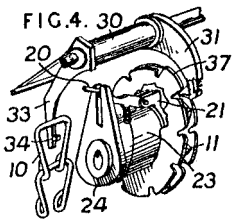

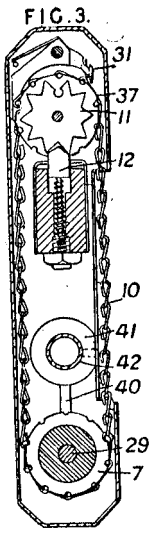

Adding-apparatus; detent mechanism; transfer mechanism.—Relates to adding-machines in which the operator differentially moves, with a style, endless chains passing over the numeral wheels. The chains 10, Fig. 3, for the various denominations, are drawn down by the style against graduated setting-plates, and pass over idle wheels 11 at the upper end of the machine and over numeral-bearing wheels 7 at the lower end of the casing. The transfer-mechanism between the chains is arranged in connexion with the idle-wheels, each idle-wheel carrying a sleeve 23, Fig. 4, with slotted guide 24 for a pin 20 pivoted to a bracket 21 upon the wheel, and adapted to be pressed inwards against a stationary circular cam surface (not shown). At certain points the cam is cut away and the travelling pin moves inwards into engagement with the teeth of a transfer-receiving pinion upon the next higher wheel. The transfer over-throw-preventing device consists of a tooth 37 upon the lower wheel operating a spring-controlled lever system 31, 30, 33 to engage a tooth 34 thereon with the chain 10 of the next higher wheel. The chain tension is regulated by threaded distance-rods 40 working in circular nuts 41 carried by the cross-stay 42. Star teeth upon the upper chain-wheels co-operate with spring-controlled alining-wedges 12. Zeroizing-mechanism of known kind is provided, operated by a combined axial and rotary movement of the numeral-wheel spindle 29. The setting and transfer parts are arranged for British monetary values.

Cheesman H 6747/1888 Circ Tab calc for strength of ropes.

6747. Cheesman, H. May 5.

Calculating-apparatus.—Relates chiefly to apparatus for use in connection with scales or tables for showing the strength, weight, &c. of wire or other ropes. The apparatus is, however, applicable for use with other tables. A rotary disc *c* is pivoted behind, or within a recess in, the plate *a*, and the various scales are marked thereon radially so as to appear through slots *d*, along the edge of which

28

are marked the particulars relating to the various numbers of the scale. Notches *e*, *e* may be provided to allow of the disc being rotated, or a projecting

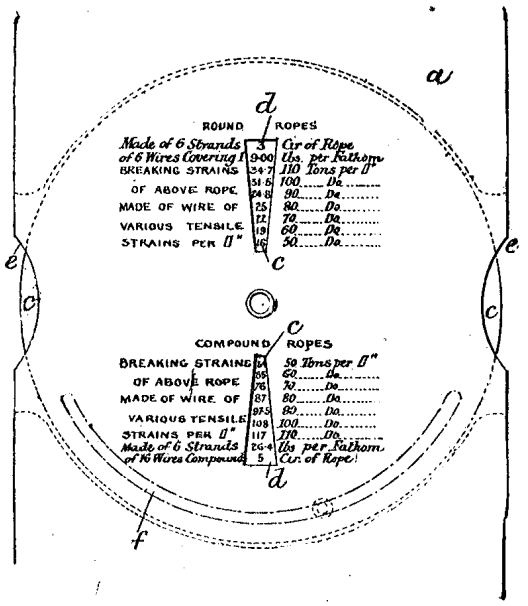

knob working through a slot *f* may be employed. In this case the slot may be graduated to allow of turning the disc readily to the required scale. The Figure shows the instrument as applied to calculations concerning the strength &c. of ropes.

Chesneau J R 1300/1861 Tables on pen holder

1300. Chesneau, J. R. May 22.

Calendars; calculating-apparatus.—The multiplication table or a calendar, or both, are printed, engraved, or embossed on, or otherwise applied to, pen and pencil holders.

Chesterman J 9214/1842 Tapes and box Chrono abr

CHESTERMAN.
BOTTOM.
11th Jan. 1842.

9214. A grant unto JAMES CHESTERMAN, of Sheffield, in the county of York, mechanist, and JOHN BOTTOM, also of Sheffield aforesaid, mechanist, for their invention of "Certain improvements in tapes for measuring, and in the boxes for containing the same"; 6 months.

A.D. 1829, July 14.—N° 5817.

CHESTERMAN, JAMES.—"Improvements on machines or "apparatus for measuring land and other purposes."

This invention consists "in what is commonly called a measur- "ing tape, in which the cylinder or barrel on which the tape is "wound is connected with a strong watch or clock spring, accord- "ing to the size required, in such manner as to wind up the tape "after it has been drawn out, without any effort on the part of "of the operator."

In one measuring machine "of a short length, as, for instance, "a yard," a simple attachment of the tape cylinder to the steel spring is sufficient, the tape cylinder forming also the box of the spring, and the stud to which the spring is attached being also the axis on which the cylinder turns. The tape passes out of the case between two rollers; and, at any given length the tape may be pushed against one of the rollers by means of a bolt, thus stopping the entrance of the tape into the case until the bolt is withdrawn.

When a measuring machine is required to contain a considerable length of tape, an arrangement of toothed wheels provides that the tape is wound on the cylinder faster than the spring unwinds from the stud, "otherwise the spring would be of an inconvenient "length." The tape cylinder is separate from the spring box; it carries four arms, at the centre of which is the stud and a pinion

Chew A C 117318 of 1917 Slide rule for trig

117,318. Chew, A. C. July 26, 1917.

FIG.1.

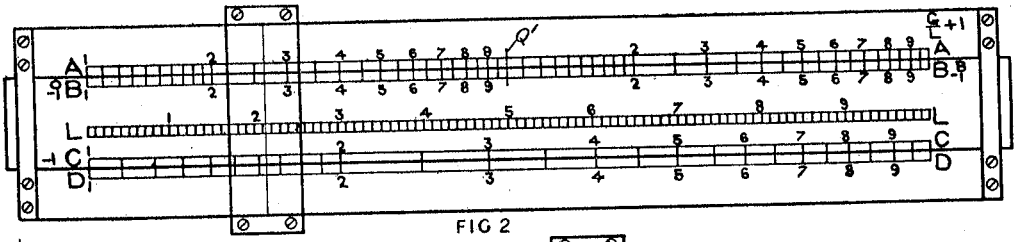

FIG 2

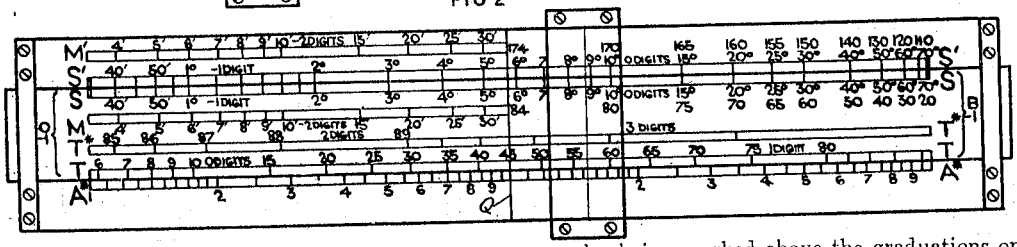

Slide-rules for use in solving problems in plane and spherical trigonometry in addition to the ordinary uses of a slide-rule comprise on one side log scales A, B, to a double radius, preferably of 25 c.m., and log scales D, C of single radius, the scales A, D being on the stock and the scales B, C on the slide. In addition, there is formed on the slide a scale L of logs, used in connexion with the scale D. On the reverse side are log. scales M, M¹ of minutes reading from 4 to 34 minutes, which scales may be read as sines or tangents and the circular measure of these angles may be read on a scale A* which is similar to the scales A, B. The graduations of the 10, 20, and 30 minutes are differently coloured to indicate that from them can be obtained the values of 1, 2, and 3 minutes. Scales S, S¹ are log. scales of natural sines from 34 minutes to 90 degrees set out to a single radius, the supplements of the angles being marked above the graduations on the scale S¹ and the complements above those on the scale S. The scales M¹, S¹, A* are carried by the stock and the scales S, M by the slide on which are also formed to a single radius two log. scales T, T* of tangents, graduated respectively from 5 degrees 43 minutes to 80 degrees 17 minutes and from 84 degrees 18 minutes to 89 degrees 59 minutes. From the scales M, M¹, S, S¹ in co-operation with the scales A, A*, B can be obtained the circular measure, sines, cosines, secants, cosecants, and tangents of angles from 1 minute to 50 degrees 42 minutes and from the scales T, T* tangents of angles from 5 degrees 43 minutes to 89 degrees 59 minutes. The scales M, M¹, T* may be differently coloured to the remainder, and the centre indices of the scales A, A*, B and the centres of the scales S, S¹, T, T* are distinguished by longer differently coloured lines Q, Q¹. Various formulæ such as $\frac{G}{L} + 1$, 0—1, B—1 are placed at different points of the scales, the first being employed in the operation of division and the others used in conjunction with the lines Q, Q¹ to obtain the decimal point in multiplication, examples of their use being given in the Specification.

Chew A C 139340 of1919 Slide rule with rack and pinion

139,340. Chew, A. C. April 10, 1919.

Slide rules. — In slide-rules wherein the slide is adjusted by a rack and pinion, the pinion B is made of segmental form as shown in Fig. 1, so that normally it is not in engagement with the rack A carried by the slide. A pinion is mounted at each end of the rule and exterior milled heads &c. are provided on the squared shafts C. A cursor for the device consists of a metal frame F, Fig. 3, carrying two plates of glass, a spring G, and a plate L bearing on the top surface of the rule. The plate L is of channel section, the base N of which extends beyond the cursor frame, the plate being locked to the frame by bent-over portions H situated on either side of tongues M.

FIG. 1.

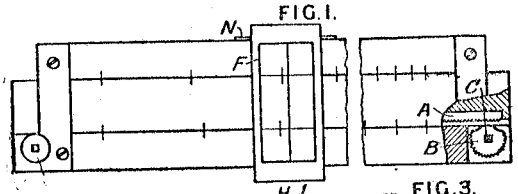

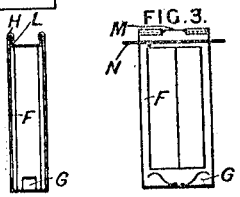

FIG. 3.

Chico P P S 8582/1884 ship stability

8582. Chico, P. P. S. y. June 4.

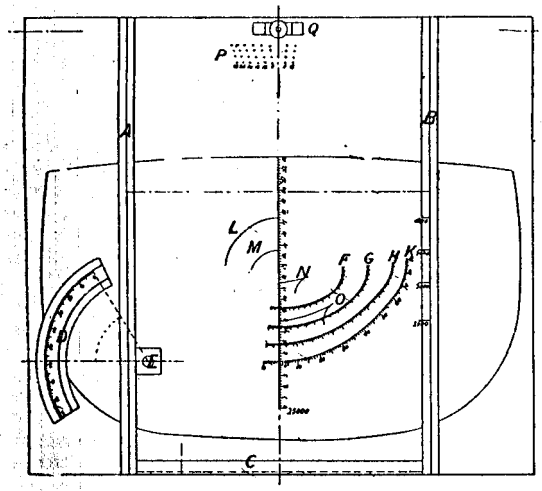

Calculating-apparatus.—The invention consists of a number of instruments for ascertaining all the elements of stability of a ship. The Figure shows a board faced with slate, or some substance capable of receiving permanent as well as temporary marks. It is provided with two metal guides A, B at right angles to the bottom edge C of the board. A circular metal segment of about 90° is placed at D, its centre being at E, which is also the centre of a hole in a metal piece for the reception of a pivot. A midship section of the

2

ship's hull is engraved on the slate and also curves F, G, H, K, showing the loci of the centres of buoyancy for different displacements separated by convenient intervals. The water-line envelops the curves L, M, N, O, for the same displacements, as the vessel rocks. The dots at P are used for drawing normals to the curves of buoyancy. A guide Q completes the arrangements of the board. Three instruments are used with this board: —(1.) A T-square having a smaller square movable on it, by which can be found the projections on the midship section of the absolute positions of the centres of gravity before and after moving a portion of the cargo from one place to another, having given the displacement, the relative positions of the original and new places of stowage, and the inclinations of the vessel. A similar operation can be performed in the case of fresh additions to the cargo. (2.) An instrument fitting in the guides A, B and through the guide Q for determining the righting moment for any displacement or inclination, and the stability between any two limits. (3.) An instrument furnished with a pivot fitting into the centre E, and used in connection with the scale D for determining the water-line, having given the displacement and the inclination.

Childs C V 15821/1913 Slide rule for steelwork

15,821. Childs, C. V. July 9.

Slide-rules. — A rule for use in calculating the strengths of girders &c. in constructional steelwork consists of the usual scales *a*, *b*, *f*, *g*, additional scales *c*, *d*, *e* denoting floor loads in hundredweights and pounds per square foot and weights per square foot of wall area, and scales *h*, *j* representing the dimensions of British Standard rolled-steel joists corresponding to the strengths required.

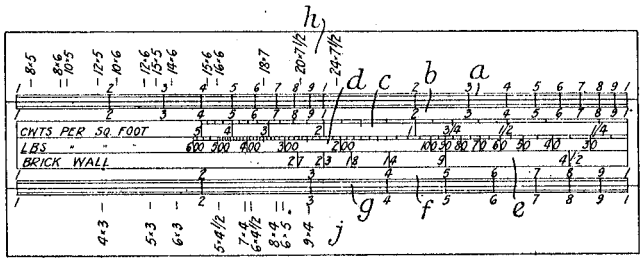

Chow Ling Shang 12875/1900 Bones

12,875. Chow Ling Shang. July 17.

FIG.1.

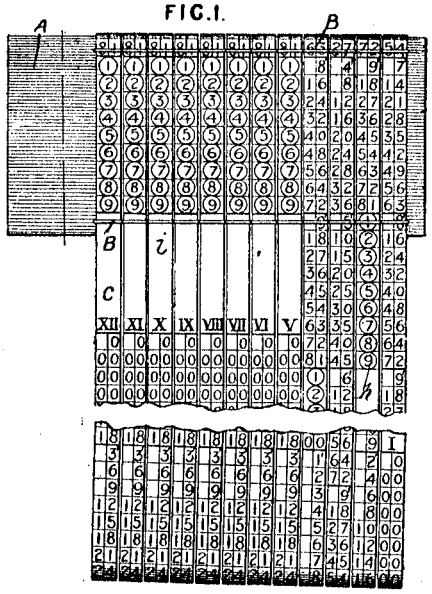

Calculating-apparatus.—The apparatus is for facilitating multiplication and division. A series of, preferably endless, tapes C are passed through guides B, B on a board A. These tapes are each marked with the numbers 1 to 9, as shown surrounded by small circles, and then, after a blank space *i*, with successive columns representing the products of the numbers 1 to 9 by 0 to 9 respectively. In Fig. 1 the instrument is shown as set for the multiplication of 8497 by any number from 1 to 9. Thus, taking the row of numbers opposite (8), we get 64, 32, 72, 56, and, adding the figures on the adjacent edges of the tapes, the required product 67,976 is obtained.

Christie R A 112681 of 1917 Disk for artillery calcs

112,681. Christie, M. A., (*Christie, R. A.*). Feb. 1, 1917.

FIG. 1.

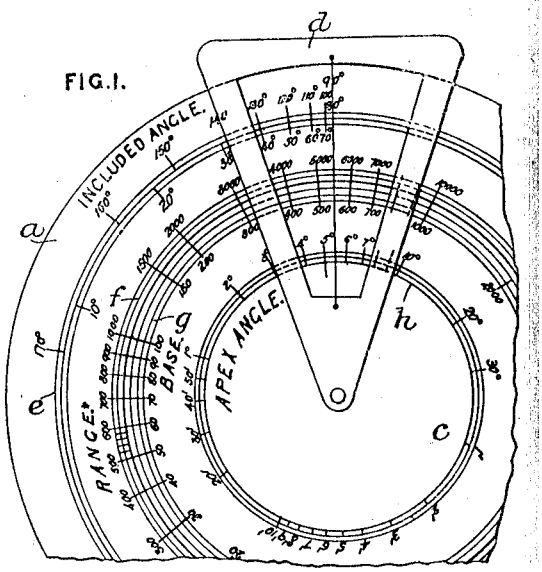

Sundae rates particularly adapted for artillery calculations. A disk *a* is provided with a range scale *f* and an "inclined angle" scale *e*, that is, the angle formed by the lines joining the observer with the target and the base. The central disk *c* has a base scale *g* and an "apex angle" scale *h*, that is the angle subtended by the base from the target. A cursor *d* of sector shape is pivoted on the centre.

Church W 39 / 1858, Rules & machinery to manufacture them

A.D. 1858, January 9.—N° 39.

CHURCH, WILLIAM. — "Improvements in measuring rules, "compasses, and other mathematical instruments, and in "machinery to be employed in manufacturing measuring rules "and other mathematical instruments."

1st. Making the folding joints of measuring rules "of several "plates of metal equal in thickness to the thickness of the por- "tions or wood with which they alternate."

2nd. "Making the metal part of the principal joint of a rule," so that "the base of the said metal part is made of a curve having "the centre of the rule joint for its centre." Other modifications "are set forth.

3rd. "The addition of a slide similar to that of the slide rule "to the set square" used in drawing. A great number of angles can thus be drawn.

The graduation of the slide is effected by a machine.

4th. "Graduating the head of the screw used on one leg of a "pair of compasses for effecting fine adjustments."

5th. "A machine for cutting dovetail grooves for the before- "mentioned set squares and slide rules. Two revolving cutters are "fixed on axes inclined to one another." For forming the slides the relative position of the cutters is changed.

6th. "Machinery for manufacturing measuring rules." "A "series of circular cutters" are "mounted upon an axis at "distances equal to the thickness of the pieces to be cut." "The slips of wood are not quite separated by the cutters," and the thin joining is afterwards cut away, by means of discs furnished with cutters, at the same time as the edges are smoothed by the same apparatus. In order to cut away the wood for the metal plates of the joint "the piece of wood is supported on a "platform turning on a vertical axis" which rotates "through a "quarter of a circle;" during its motion a pair of reciprocating cutters reduce the wood to the requisite thickness; "the curved "figure of the portions cut away is perfected by a fixed cutter "against which the piece of wood is carried during its motion." When the metal plates of the joint have the curved figure described under the 2nd improvement, "the wood may be cut "away by two rotating cutters between which the wood passes, a "middle cutter forming the slit for the middle plate of the joint." By stringing a number of the joint plates upon a mandril, and using a reciprocating cutter, the edges of the plates are planed; the circular part is planed by means of a slow motion through three quarters of a circle; geared drills, working simultaneously, drill the requisite holes, and rams (lifted by a crank) insert the pins. "The tips of the rules are formed from sheet metal forced "into a trough-like die." Metal scrapers on an endless band

smooth the sides of the rule. The divisions are produced by a series of cutters pressed by a spring; or, the graduation "may be "produced by a compound die made up of a series of small dies "dovetailed or otherwise connected together."

[Printed, 3s. 4d. Drawings.]

© B O B Williams Printed22/11/2023 CalcPatents Ed. 1.doc

Claassen H 5518/1900 Vacuum gauge for crystallisation

5518. Claassen, H. March 23.

Calculating-apparatus; registering-scales; vacuum gauges.—Relates to a process of obtaining sugar in crystals from syrups, and apparatus therefor. The syrup having been run into a vacuum apparatus is evaporated to a certain degree of concentration determined empirically and treated with steam until the required crystallization has been effected. During this process the temperature is regulated and the above-mentioned concentration of the mass is maintained. A further quantity of syrup is then introduced into the vacuum apparatus, the necessary temperature and degree of concentration are obtained by treating with steam, and the mass is constantly agitated. An apparatus for use in controlling the boiling operations comprises a vacuum gauge, a thermometer, and two double scales L, T and D, E. The scales D, E are marked upon a slide S, which carries a fixed pointer O and a movable pointer Z. The scale D indicates the difference in degrees Centigrade between the boiling-point of the syrup and that of water under the same pressure as indicated by the vacuum

FIG. 2.

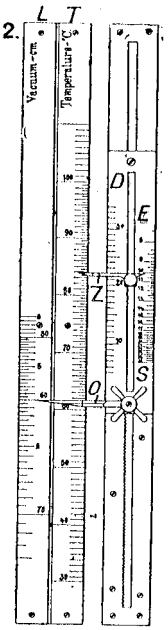

33

Clarke & Debenham 29574/1912 Tab Calc

29,574. Clarke, E. R., and **Debenham, E. R.** Dec. 23.

Multiplying and dividing apparatus; tabular calculators.—In apparatus wherein it is desired to move the member to be set from its normal position to a position determined by movement to the extent of a selected number of units parallel to one axis of co-ordinates, together with a similarly-selected movement parallel to the other axis of co-ordinates, the effect is produced by the provision of guides whereby rotation of the member is prevented together with two other guide-edges formed in or secured to the member and parallel to the axes of co-ordinates (usually rectangular) which co-operate with a row of key-depressible stops, placed and numbered according to the successive units, of which two are depressed for a setting.

FIG. 5.

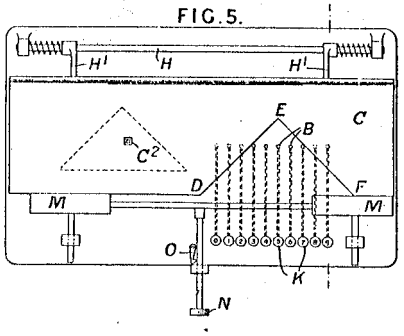

In the multiplying-apparatus shown in Fig. 5, the various positions on the set member are caused to select from a table of the products of the numbers "1" to "9" by themselves, the table having the triangular dotted outline indicated, and the product for which the apparatus is set being disclosed through a reading-aperture C^2. To set the apparatus, the plate C is pushed rearwards against the action of spring-arms H^1 by means of a key N, which becomes locked by a catch O when the plate reaches normal position. Two keys K are depressed to raise corresponding stops B, and the catch O is displaced so as to allow the plate to move forwards and sideways, as controlled by the rod H and guides M, until arrested by the contact of guide-edges E D, E F, which are parallel with the lines of the multiplication table, with the selected and raised stops. Equivalent arrangements are described in which the table may move and the reading-aperture remain stationary, or the tens and units may be read from separate tables through separate reading-apertures, either the tables or the apertures moving together, or in place of visible numerals the various positions may be assigned to depressions or projections of various depths, heights, or lengths, forming the partial-product representation-devices of complex multiplying-machines provided with differentially-movable parts for feeling or taking-off the partial products. The moving member may also be a cylindrical surface.

Claud-Mantle J G 8984 /1886 apparatus for indicator diagram

8984. Claud-Mantle, J. G. July 9.

Calculating - apparatus for indicator diagrams. A gridiron ruler for drawing the ordinates, and a scale are used for obtaining the mean pressure directly from their sum. The ruler is formed of parallel bars A jointed to two pairs of parallel links B, C hinged together at D. A cross-bar E is fastened to one of the two extreme bars and takes over a screw F on the other, so that by a milled nut G they may be held at different distances apart to suit diagrams of various lengths. To alter the relative distances between the intermediate bars their joint pins H are put into other holes of the links B, C, or they may slide in slots. The sum of the ordinates is marked off on paper and read by graduations drawn to a scale which is that of the diagram multiplied by the number of ordinates, thus saving division to find the mean pressure.

(*For Drawing see next page.*)

33

8984.

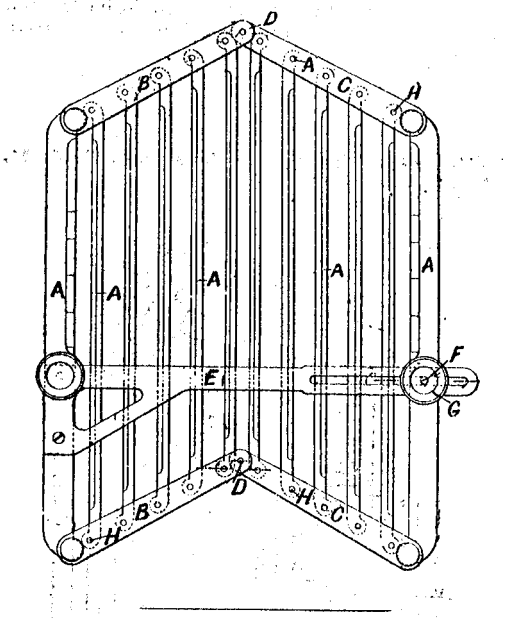

Claudel P 755/1886 Uses similar triangles for trig.

755. Claudel, P. Jan. 18.

Calculating-apparatus.—The apparatus consists of a graduated square A, each side of which is divided into 100 parts. At one angle is pivoted a rule B graduated in similar divisions; this turns in frictional contact with a metallic arc (not shown) which prevents it from slipping when placed in any position. The square is also marked with the semicircle C, quadrant D, and angular divisions radiating from the pivot. The use of the instrument is based on the principle of similar triangles. For example, to multiply 8 by 7, move the rule till graduation 100 crosses vertical line 80; run up the vertical passing through 70 on the rule; the result 56 is shown on the side of the square. Again, to find the square root of 64, move the rule till it coincides with the intersection of the vertical

102

through 64 and the semicircle C; the result 8 is at once seen. Trigonometrical functions can be read

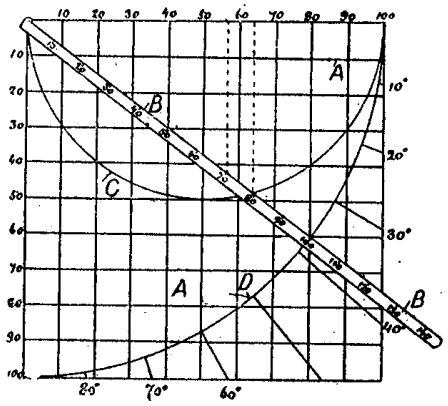

off by turning the rule to the proper angle. For other calculations, curves may be traced upon the square. A vernier may be used for small readings.

Clifford C C 8542/1898 Adder printer

8542. Clifford, C. C. April 12.

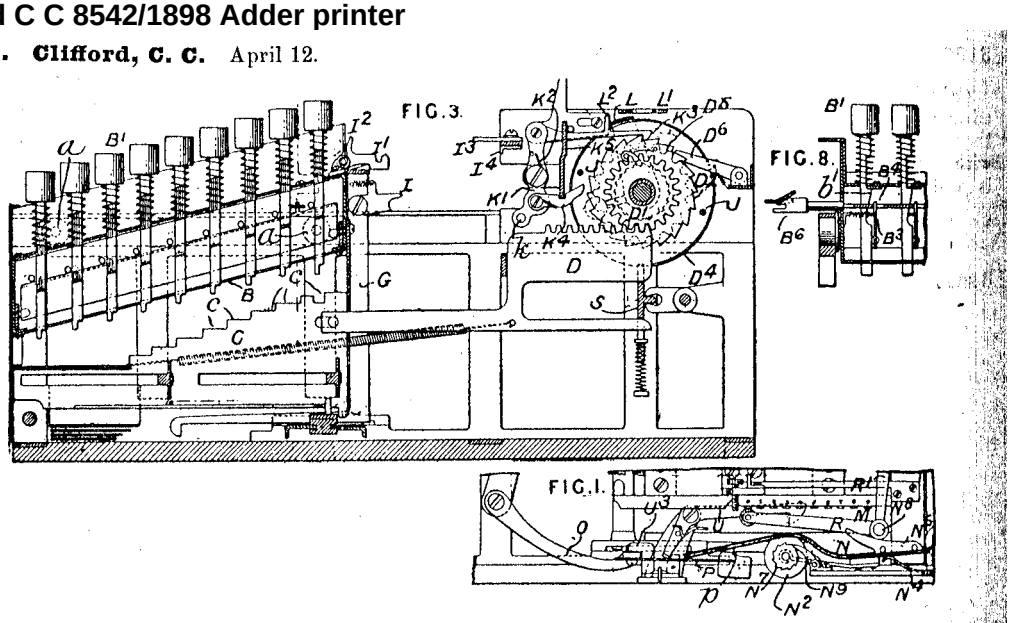

Calculating-apparatus.—Relates to apparatus for adding and multiplying and printing the process and its result. A series of rows of spring keys B^1 are mounted in a carriage B which can be pushed forward on rollers *a*, *a* to effect the registration after the amount to be added has been set up by depressing the keys. When any key is depressed it is held by a spring bar B^3, Fig. 8, engaging a shoulder b^1 until the return of the carriage, when a slotted bar B^4, which is so shaped at its end B^6 that it slides under and lifts an abutment in the forward movement, but is thrust to the right by it in passing back, releases all the locking-bars B^3 and allows the keys to be returned to normal position by their springs. In its forward stroke, the depressed key in each row strikes one of the steps *c* on a plate C and moves this plate, and with it the sliding rack-bar D, a distance proportional to the value marked on the key, giving a corresponding rotary movement to the registering-wheels D^4 through the pinions D^1 and a connecting pawl and ratchet. The wheels are not returned with the racks, being held by detents D^6 acting on scallop wheels D^5, so that each sum set up on the keys is added on the register. Where repeated addition of the same number is required, as in multiplying, an arrangement is provided by which the key returning mechanism does not act till the required number of strokes has been given. This consists of a dial with nine teeth turned by hand a distance proportional to the number by which it is desired to multiply; the dial holds the abutment for the key-releasing bar B^4 out of action until it is returned to normal position, one tooth at a time, by the repeated movement of the carriage. The apparatus is actuated by a lever, not shown, linked to a frame G which is normally locked to the carriage B by a spring latch I^1. When the complete forward stroke has been made, the projections I^2, I^3 meet, releasing the frame G (which can travel still further) and engaging the latch I^1 with a bar I^4 so as to retain the carriage till the return of the frame. A rack and automatically-reversing pawl ensures the complete stroke of the frame. The 'carrying' mechanism of the counter consists of a series of pawls K^3 mounted on spring levers K^1 with latches K^4 engaging a cross-bar K^5. Whenever a wheel of the counter passes its zero below the exhibition slit L^1, a pin J releases the latch K^4 of the next higher wheel, whereupon the lever K^1 swings so as to engage the pawl K^3 with the next tooth of a ratchet-wheel D^2 and bring a pin *k* in front of the pawl I on the frame G. At the next stroke of the frame the lever is returned, moving forward the wheel one unit and re-engaging the latch. While

198

Text omitted

Cloud O E 27472/1903 Adder Printer

27,472. Lake, H. H., [*Cloud, O. E.*]. Dec. 15.

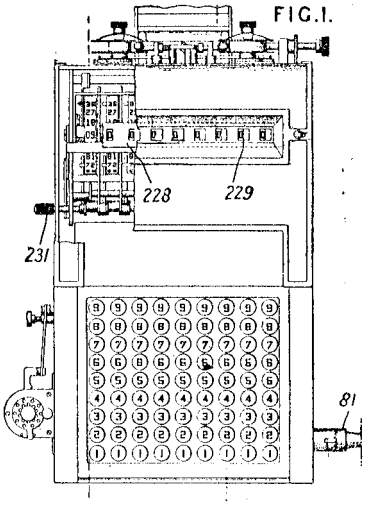

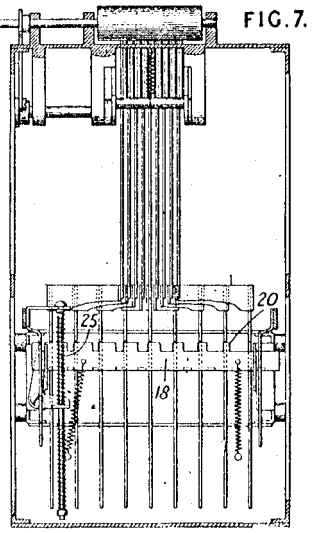

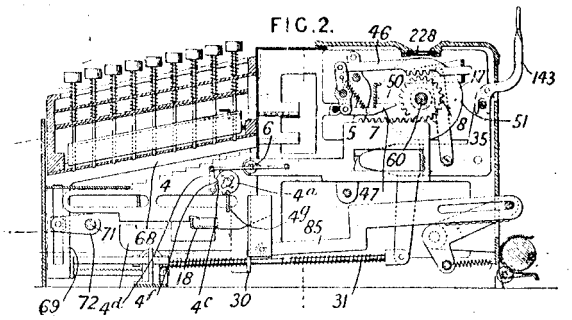

Calculating - apparatus. — A keyboard calculating and registering machine, adapted to register, indicate, and print the addition, subtraction, multiplication, or division of numbers, is shown in plan in Fig. 1, and in longitudinal section in Fig. 2. The machine has a series of sets of independently operative keys acting in connection with a movable keyboard, and a series of sliding members adapted to co-operate with the keys to communicate movement to the registering-mechanism, which includes means for transferring from one element to another certain multiples of figures. The dial-wheels 17 mounted upon the shaft 60 have black and red rows of figures, the red numerals increasing and the black numerals decreasing in one direction, and the wheels are fixed to the pinions 8. The pins 50, 51 on the dial-wheels effect carrying by engaging the catches 47, which operate the serrated members 46 of the next higher dial plate. The black or red numerals are displayed according to the position of the slide 228 beneath the apertures 229. Beneath each set of keys is the step-bar 4 which has a reciprocating horizontal movement. Each step-bar has a type-bar 85 and a rack-bar 5 adapted to co-operate between the step-bar 4 and the pinion 8 to communicate motion to the dial-wheels, the connection between the step-bar and the rack being a lost motion one. This lost motion effects the printing of the significant zeros without printing the non-significant zeros. The slide 18, Fig. 7, transversely disposed beneath the step-bars, has projections 20 of different widths. This slide is carried to the left by the bell-crank 25 until stopped by the step-bar of highest denomination operated. In the motion of the keyboard, compression of a spring begins before the keyboard reaches the limit of its advance, and in the forward movement the projection 30, Fig. 2, stores up power in the spring 31. At the end of the forward movement the rack 7 is disengaged from the pinion 8. Return movement causes upward movement of the member 35, and the disengagement of the ratchet 46 and the re-engagement of the latch member 47. A shutter mechanism for the dial-wheels is provided and can be operated manually by the knob 231. The keyboard is supported by ball bearings, and is reciprocated by the hand-

More text and a drawing omitted

Clowes T 7635/1903 Tab calc circular

7635. Clowes, T. April 2.

Calculating - apparatus; indicating informa
—A rotary disc calculating-apparatus for use

connection with betting transactions is described. The disc is printed, on one side, with "odds on," and, on the other, with "odds against," and is mounted to turn with reference to the braces E.

FIG.1.

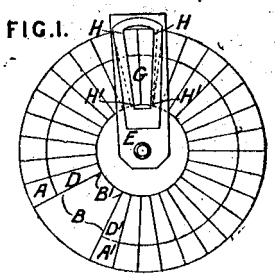

In the spaces A to A^1 round the outside are printed the odds 100 to 6, 100 to 7, &c. At the parts marked B to B^1, on the disc, and H to H^1, on the braces E, are printed the stakes. In the spaces D to D^1 are the various reckonings, arranged so as to appear through the openings G in the braces as required.

Cochran J E 18745/1909 Computing scale £sd

Weighing - apparatus. COCHRAN, J. E., 118, East Franklin Street, Elkhart, U.S.A. Aug. 9. [*Addition to* 24,005/09.] [*Classes* 106 (iv) *and* 143.]

Indicating apparatus. ...or a computing ...has a series of ...paces in which are ...s of numbers 1 ...enting pence, and ...ations correspond- ...numbers, the spaces ...ch two adjacent ...mbers and gradua- ...ing respectively a ...ation and a number ...a shilling or a ...multiple thereof. ...together with a ...set of gradua- ...indicated on the ...in the drawing. ...applied to the ...ated in a concen- ...out midway between ...and the periphery

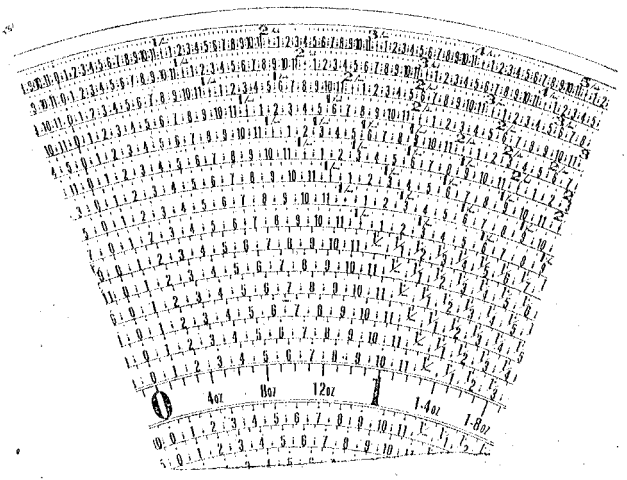

Cochran J E 24005/1910 Computing scale

24,005. Cochran, J. E. Oct. 19.

Computing-apparatus.—In a computing weighing-scale dial of the kind consisting of concentric rows of money-value graduations adapted to rotate behind a stationary price-per-pound pointer 4, all the graduations 7 are numbered by means of concentric rows of numbers 1 to 9, and the last graduation of each series, i.e. every tenth graduation, is numbered, or, as shown in Fig. 2, is replaced by a multiple of ten situated in a different concentric row. The dial is designed to make two revolutions; and a third set of money-value numerals is arranged, preferably above the second set, to indicate the higher values when larger weights are being dealt with. The outer pair of concentric numerals 2, 3 represent the weights in pounds and ounces during the first and second revolutions respectively of the dial.

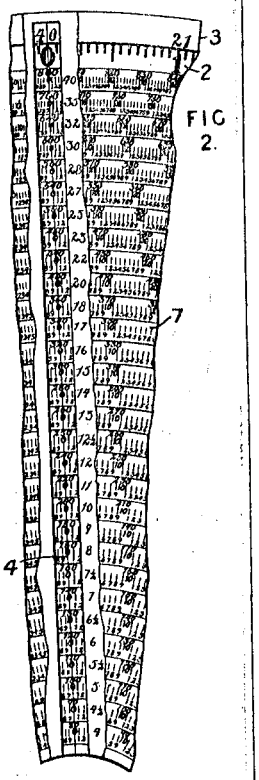

FIG 2.

Coddington & Livens 13759/1915 Wage calculator sheet

13,759. Coddington, F. J. O., and **Livens, G. H.** *Nov. 27.*

Tabular calculators; proportional calculators.— In a calculator for wages, employing square-ruled paper and a swivelling reading index-line L upon a transparent pointer N pivoted at one corner, the two sides of the square are graduated to represent hours and shillings respectively, and a second scale C D is provided for calculating percentages of wages in the case in which wages have to be divided between a gang of men. The line L is set on the scale C D to an amount which it is desired to divide up in percentages, and the percentage is read on the hours scale. As shown, the scale is set for 50 shillings, and to get 52 per cent, the vertical line 52 is taken, and its intersection with the reading-line L gives 26 shillings on the vertical shillings scale.

FIG. 1.

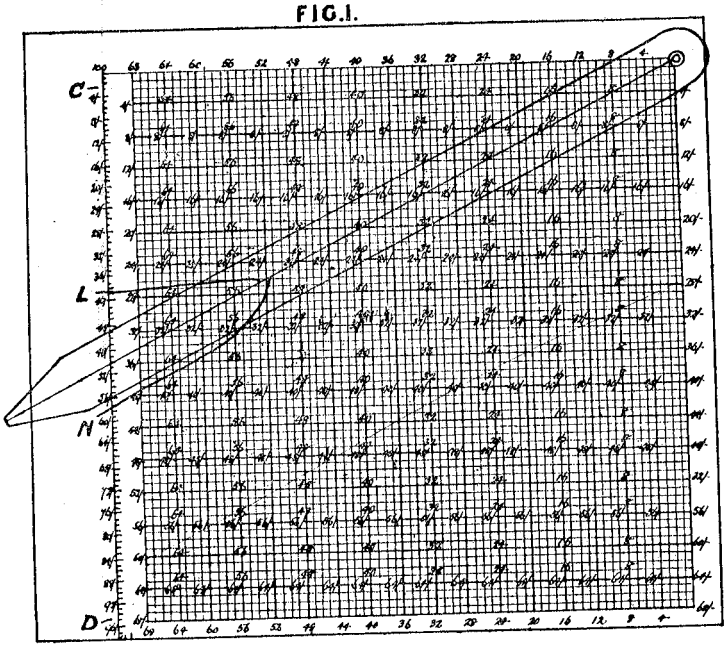

Colby C K 12664/1894 Speed calculator on watch face

12,664. Colby, C. K. June 29.

Calculating apparatus.—The centre of a watch dial is occupied with figures for converting seconds per mile in travelling into speeds of miles per hour.

P 11408 1

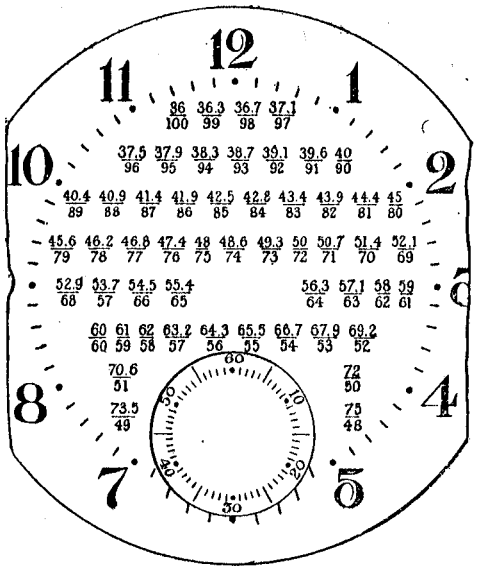

Cole H L 28360/1911 Slide rule for locomotive effort

28,360. Cole, H. L. Dec. 16.

FIG. (a).

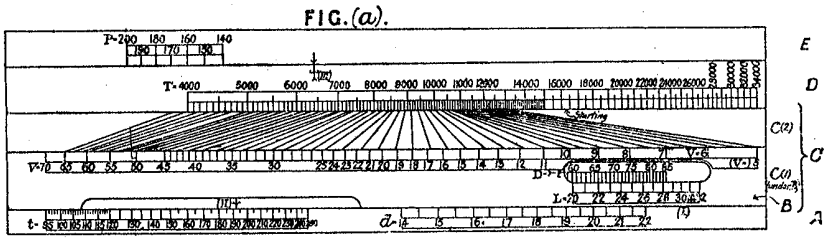

Slide-rules are graduated so that the total tractive effort exerted by a locomotive at different speeds can be computed from the following data:—(*a*) diameter of driving-wheels, (*b*) length of stroke of piston, (*c*) diameter of piston, (*d*) working pressure of boiler. The unit tractive effort, that is, that exerted per unit of mean effective pressure in the cylinders, is simultaneously indicated. Scales showing various values of the quantities (*a*), (*b*), (*c*), (*d*) above are engraved on the rule at D, L, *d*, and P, respectively, as indicated by letters against the scale numbers, while the values of the total tractive effort and the varying speeds of the locomotive are set out at T and V. The scale of unit tractive effort is engraved at *t*. The parts D, B, C^1, C^2 of the rule are relatively movable, while the scales at *d*, *t* and P are set out on the base A E of the rule.

Coleridge G J D 14645/1896 Subtract £sd

14,645. Coleridge, G. J. D. July 2.

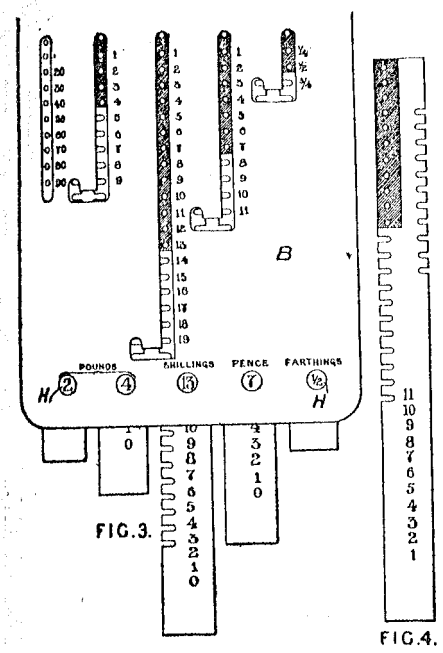

FIG.3.

FIG.4.

Calculating-apparatus.—The apparatus shown is for subtraction of sums of money up to £100, and consists of five slides, each of which (except the last) is notched, perforated, coloured, and graduated as indicated in Fig. 4. This slide shows the pence slide, the others being modified according to what they represent, while the last has no notches on its left-hand side. The frame B in which the slides work is slotted as shown with ⊥-shaped slots and perforated at H, H along its lower edge to show amounts. Suppose it is required to subtract £13 15*s.* 3¾*d.* from £24 13*s.* 7½*d.* Place a peg or pencil in the notch of the farthings slide opposite ¾. This part being uncoloured, move downwards as far as possible, slide the peg to the left in the horizontal slot, and move upwards. The sum now appearing at H is £24 13*s.* 6¾*d.* Now place the peg in the hole of the pence slide opposite 3. This part being coloured, move upwards as far as possible. The sum at H will now be £24 13*s.* 5¾*d.* Proceeding according to these two rules with each slot in turn, the final result, £10 18*s.* 3¾*d.*, will be arrived at. In the Provisional Specification a modified apparatus suitable for adding is described.

Colles G 22508/1908 Conversion scales non-log

22,508. Colles, G. Oct. 23.

Computing - scales. — In scales for converting values in one system of units into the corresponding valves in another system, graduation lines representing units of quantity, length, &c. upon two different systems of units and sub-units, retaining, however, the same relation between the actual quantities and the setting-off units, such as angle or arc, are projected from a central line on opposite sides thereof. Fig. 2 shows a scale for converting vulgar fractions of an inch into decimal fractions of an inch or the reverse, A

being the central line. Fig. 4 shows a scale for the conversion of miles and kilometres or feet and

FIG.2.

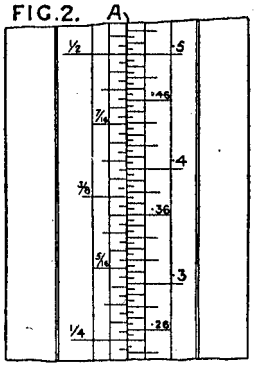

FIG.4.

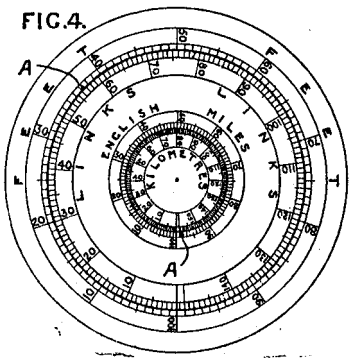

links, the central lines A being in the form of concentric circles.

Collins N 18562/1902 Tab calc on card

18,562. Collins, N. Aug. 23.

Calculating-apparatus.—On a card, shaped like that shown in the Figure, suitable scales are arranged on short arcs *d*, *e* struck from centres *b*, *c*, and the products or quotients of the numbers on the scales are placed on the card at the intersections of the radial lines. Cords *m*, *n*, or radial arms pivoted at the centres *b*, *c*, may be used to facilitate the operations, the cords fitting in notches *j* cut in the curved edges of the card.

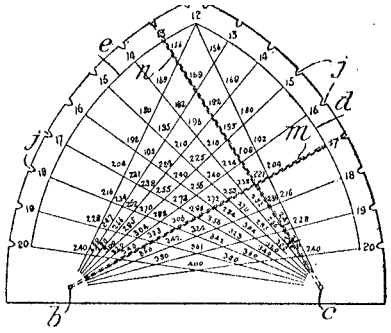

Collins A G 186/1906 Tab calc slide card

186. Collins, A. G. Jan. 2.

Calculating-apparatus; calendars.—Tables giving prices per pound &c., interest, annuity, and like tables are printed on cards or plates and carried in cases or envelopes having openings such as *a*, *e* to exhibit the corresponding values. As shown in the Figure, the prices of pounds and ounces up to sixteen at the rate displayed in the opening *e* are given to left and right of the opening *a*, the outer casing being inscribed with the numbers as shown. Any desired number of openings and sliding cards may be employed and they may be made of paper, cardboard, celluloid, ivory, gelatin, metal, or the like. A pair of cases may be hinged together, and they may be combined with calendars, slates, and the like.

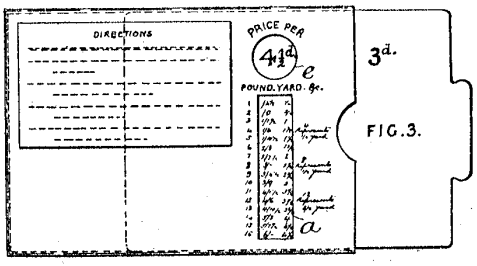

FIG. 3.

Computing Scale Co 9870/1897 Computing scale

9870. Boult, A. J., [*Computing Scale Co.*]. April 20.

FIG. 1.

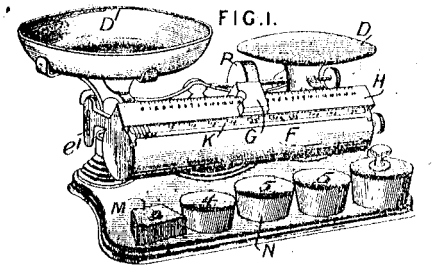

FIG. 7.

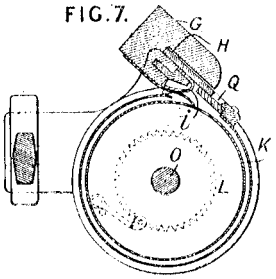

Value-indicating apparatus; sensitiveness, increasing; equi-armed balances; taring-devices. — A perspective view of an equi-armed balance is shown in Fig. 1, provided with a sliding poise G and a graduated barrel enclosed in a casing F so that the value of the weighed goods may be determined. The weighing-apparatus is of the Roberval type, with an adjustable tare-weight P mounted on the main

5

Picture from http://www.scales-and-weights.com/scales/scaleidx.htm



Connecticut Computing Machine Co 23393/1908 Print add subtract

23,393. James, R. W., [*Connecticut Computing Machine Co.*]. Nov. 2.

Calculating - apparatus. — In the printing adding and subtracting machine described in Specification No. 3761, A.D. 1905, mechanism is provided whereby the recorded items of addition and subtraction have distinguishing marks printed opposite them or are printed in different colours; alternatively a combination of the marks and colours may be used. Means are also provided to return the adjustment means automatically to the addition position, or if desired to the subtraction position. The gear-wheel 503, the shifting of which alters the function of the machine from adding to subtracting, is moved by an arm 395 rigidly mounted on a bar 54, which can be moved longitudinally by a lever W pivoted at W^1 and connected to the shaft A by a pin W^2, the shaft having a screw-thread B engaging a screwed hole in the machine frame. Secured to the shaft is a pin G which operates, through link-work H, I, J, K, a lever L, of which the distant slotted end engages a pin M upon a disk N, mounted on the shaft of the printing-wheels, and bearing type faces N^1, N^2, N^3, which, when in the printing line, print a total distinguishing sign, a minus sign, and a plus sign, respectively. When the crank C is pressed down to turn the shaft A, the lever L is so moved that the type face N^2 comes to the printing line. At the same time, the crank C causes the shaft A to move longitudinally, and through the lever W and bar 54 adjusts the wheel 503 to the subtraction position. The totals key 863 adjusts the machine for printing the totals by its connexion to a lever P, the upper end of which has a pin P^1 engaging the slot I^1 of the link I. When the key is pressed, the pin P^1 travels to the forward end of the slot and moves the link I slightly, whereby the type face N^1 is brought into the printing line. If different colours are used, say black for the addition items and red for the subtraction items, the ribbon O is mounted in guides carried by posts Q, Q^1, which at their lower ends engage the arms S, S^1 connected to a cross-bar T. The arm S^1 has a projection S^2 which rests upon a step U carried by a dependent arm *v* pivoted at v^1 to the disk N which is thus enabled to position the ribbon. In order to bring the machine back to the normal position, all the parts are spring-retracted; and if it is desired to hold the machine in the subtracting position when printing a series of negative items, the crank C may be held down by a pawl and detent, or by any other means.

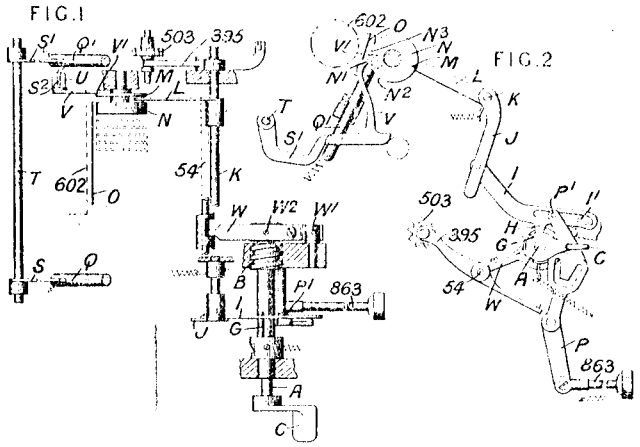

Connolly & Osborne 5168/1904 Planimeter for hides

5168. Connolly, J. J., Connolly, S. F., and **Osborne, V.** March 2.

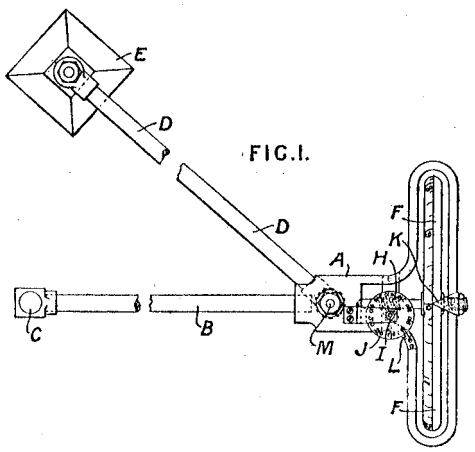

Calculating-apparatus.—A planimeter for measuring the areas of hides, skins, and other surfaces, consisting of suitable linkwork connecting a point for tracing the outline, a recording-wheel travelling on the surface, and a fixed centre of motion, is adapted to calculate the difference between the area in question and a constant area of 100 square feet, the graduations being arranged to take this into account and give a direct reading. The tracing-point C, the bar B, and the frame A carrying the spindle of the wheel F are rigidly connected. The arm D passes from the pivot M to the fixed centre of motion E, the plane of the wheel F being at right-angles to the arm B, while its spindle, the pivot M, and the tracing-point are in one plane. There is a scale upon the edge of the wheel F, with a screw and worm-wheel H, I for indicating revolutions upon the dial J, pointers K, L being provided.

Connolly & Osborne 2161/1908 Planimeter for hides

2161. Connolly, S. F., and **Osborne, V.** Jan. 30.

Calculating-apparatus.— Planimeters for hides, skins, and other surfaces, of the type described in Specification No. 5168, A.D. 1904, are provided with lifting-arrangements whereby the whole apparatus may be raised from the article measured. Fig. 3 shows a planimeter which has a circular track 6 upon which the integrating-wheel 2 always moves, and is fitted with a weight 5 and a balancing-arm 1 therefor, and with a cord 7 attached by a swivel joint to the centre 4 of the track frame, about which these arms can turn. The cord passes over pulleys 8, which may either be provided with non-reversing clutches or may be of the usual type, in which case a weight 9 is attached to the cord.

FIG. 3.

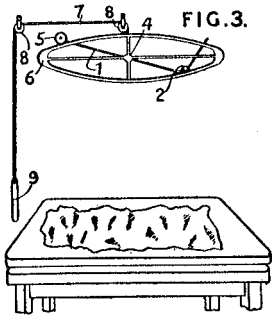

7

2217. Windley, F. W. Jan. 31.

Gauges.— Internal, external, micrometer, and like gauges are constructed with two members *a* between which may be interposed one or more blocks *d* so as to vary the distance between their working-surfaces a^1. The parts are secured together by a screwed stud *b* and nuts *c*, c^1. A non-conducting sheath *e* may be provided.

FIG. 4.

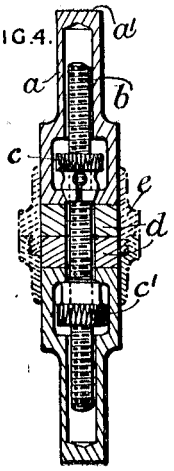

Conti J T F 15143/1912 Conversion scales £sd

15,143. Conti, J. T. F. July 1, 1911, [*Convention date*].

Computing-scales.—In apparatus comprising two or more longitudinally movable or rotary members and adapted for use in converting sums or currencies, measurements of length, weight, &c., from one system into another, one member is graduated in sub-divisions of the unit of one system and has an adjacent scale graduated in terms of the difference between the units of the two systems, while the other is graduated as usual in terms of the second unit. In the form shown in Fig. 1, the member A is divided between *a* and *b* so as to represent the sub-divisions of one shilling, while the main divisions between *a* and *c* represent the differences between the shilling and the franc in the scale adopted. The member B is graduated in francs and sub-divisions thereof. The computing-scale as set in the Figure gives the corresponding values of two shillings and any number of pence in francs, but two must be added to

FIG. 1.

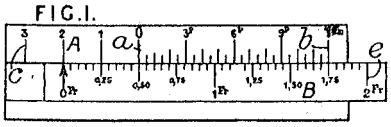

FIG. 2.

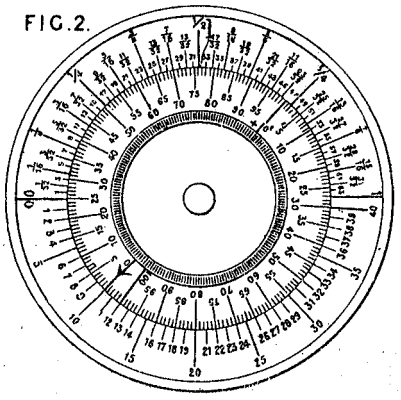

the result shown in the scale B. Thus 2*s*. 1*d*. is equivalent to (0.60 + 2), or 2.60 francs. In Fig. 2 is shown a circular computing-scale for converting, in a similar manner, measurements expressed in the standard carat into equivalents in the metrical system of carats. In another form (not shown), the rule is adapted for the conversion of French and English measurements of length.

Cooper, Bale et al 3132/1909 Abacus for teaching

3132. Cooper, A., Bale, H. J., and **Bale, Sons, & Danielsson, J.** Feb. 9.

Abacuses. — Relates to apparatus for use in a method of teaching arithmetic in which the teacher and scholar perform the operations on concrete quantities simultaneously, the operations being illustrated in symbols by the teachers. The teacher and scholar are each provided with a sheet having columns of geometrical figures *b*, *c*, *d*, Fig. 8 representing the figures 1 . . . 10, and an abacus. The teacher's abacus consists of a frame *e* having flaps or shutters *g* adapted to expose any of the squares *h*. The scholar's abacus consists of a strip of cardboard, thin metal, &c. adapted to slide in and out of a case. The operations are illustrated by means of a sheet s^1, Fig. 9, and a frame *f* which

13

carries symbol and number bearing cards and is similar to that described in Specification 8662/08, [*Class* 146, Writing-instruments &c.]. The abacuses

FIG. 8.

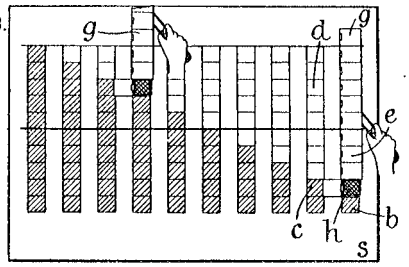

FIG. 9.

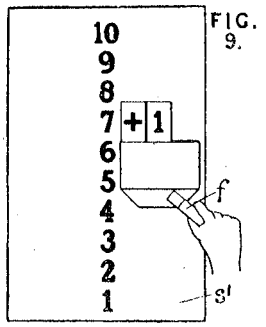

may consist of columns of concrete objects fixed to a support or of strips of geometrical figures divided by perforations. The sheets may be circular and divided radially by perforations.

Coradi G 1065/1907 Planimeter

1065. Coradi, G. Jan. 15.

Planimeters ; dials.—In a planimeter for measuring the areas of hides, leather, &c., the pivot of the measuring-arm is constrained to move in a straight groove formed in the wooden surface upon which the roller moves, and the indicating-mechanism consists of a single disk, geared to the measuring-wheel and graduated in terms of two alternative units. The plan and elevation, Figs. 2 and 3, show the pivot *c* of the measuring-arm *a* engaging the groove of the wooden base L. The frame *o*, which carries the roller R always at right-angles to and rotatable with the measuring-arm, is limited in motion by a stop which, in the limiting positions, contacts with the slide *g* carrying the pivot. Upon this frame are mounted the pivots *w* of a second frame carrying the graduated

447

See[11]

Cordingley W G 15435/1907 Small £sd adder

15,435. Cordingley, W. G. July 4.

Calculating - apparatus. —A machine for adding and subtracting, shown for money values, consists of a number of dials for farthings, pence, &c. carried by a series of hollow spindles F, F¹, F², &c. working on pillars M screwed to the base-plate and to projecting arms S of the face-plate. Each dial has holes for a stylus, and outer and inner rows of numerals, the former reading through recesses D in the circular apertures in its face-plate, and the latter at the zero bars S; the numerals are in opposite order, the rim of the apertures being numbered in similar order to the outer rows of numerals. Transfer is

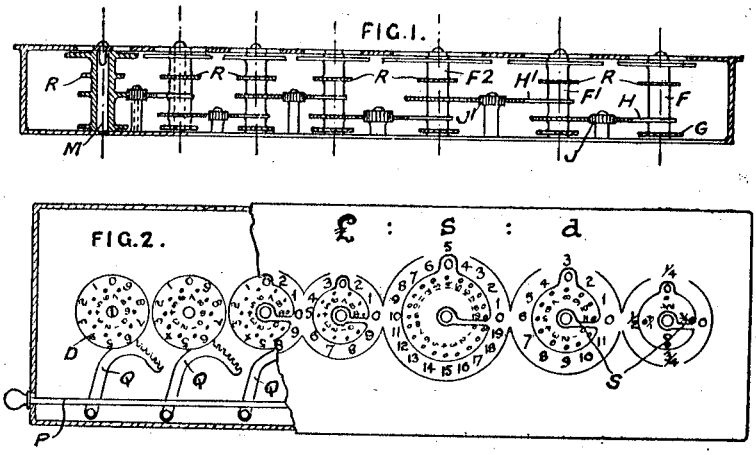

Cordt H 11650/1909 Multiplier by plates and wheels

11,650. Cordt, H. May 17.

FIG. 1.

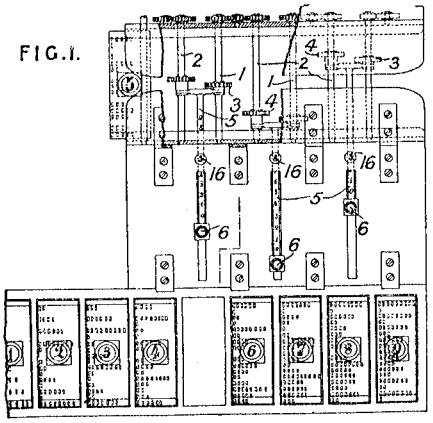

FIG. 7.

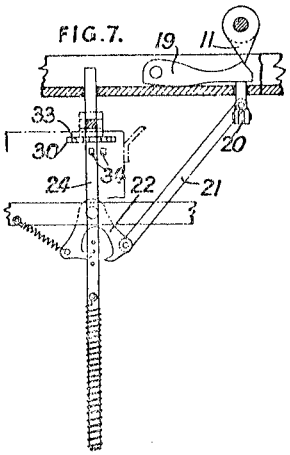

FIG. 5.

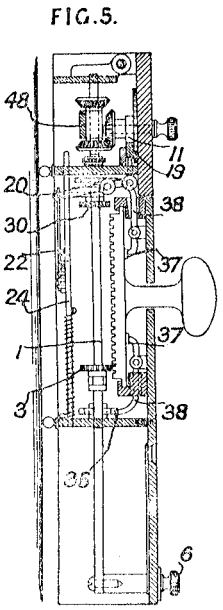

Multiplying and dividing apparatus.—The machine operates, for instance in the case of multiplication, by the passage therethrough of selected multiplying-plates corresponding in order to the digits of the multiplier, each plate being provided with series of teeth corresponding in number and arrangement to the multiplication table for the digit represented by that plate. Thus the multiplying-plate corresponding to the digit 8, Fig. 1, is provided with an uppermost row of 8 teeth corresponding to the product of 8 and 1. The second and third rows contain 1 and 6 teeth respectively, corresponding to the product of 8 and 2, and so on. The multiplicand is set in the apertures 16 by means of figured slides 5 provided with knobs 6, and the setting of any digit in the multiplicand positions two axially movable receiving-wheels 3, 4, displaced relatively to one another the distance between any two consecutive rows of teeth on a multiplying-plate, corresponding respectively to the tens and units. When the multiplicand is set, and a multiplying-plate inserted in the guideway, Figs. 1 and 5, and passed through the machine from right to left, the teeth on the plate corresponding to the product of the multiplying-factor represented by the plate and the digits of the multiplicand in succession, operate the receiving-wheels 3, 4, the wheels 3 being operated by the units teeth, and the wheels 4 by the tens teeth, in those cases in which two rows of teeth are necessary to

rotate in fixed bearings thereon. Opposite wheels bear against the belt, and a rotation of the carrying-wheel is thus produced which is a function of the angle which the plane of this wheel makes with the

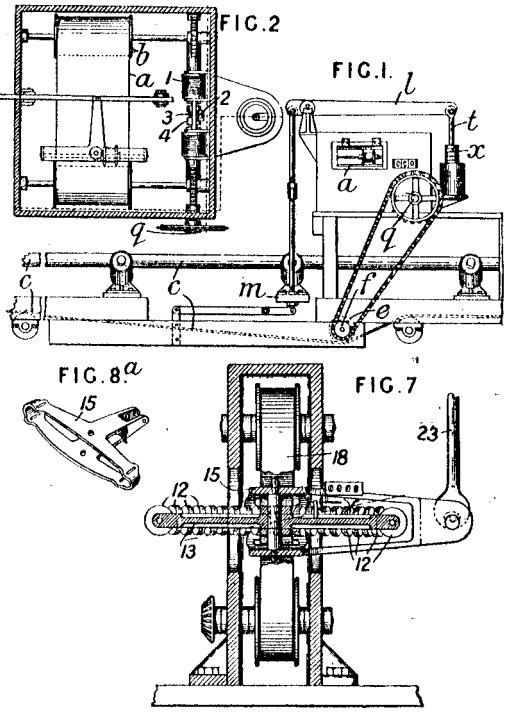

line of travel of the belt at the two points of contact. To permit the control of this angle by the weighing-lever, the carrying-wheel is mounted in a frame 15 capable of turning within limits about an horizontal axis as determined by the link 23. The rotations of the carrying-wheel are counted and fractions thereof are indicated.

Cordt H 16261/1910 ASMD Key board

16,261. Cordt, H. July 7.

Multiplying - apparatus, which is also adapted to perform division, addition, and subtraction, comprises a single bank of keys, each of which operates one of a series of toothed multiplying-rollers. The teeth on each of the multiplying-rollers are placed in rows around the rollers, and each pair of rows represents the tens and units, respectively, of the product of one of the digits 1 to 9 and the number represented by the particular key; Fig. 4 shows the multiplying - roller associated with the key 9. The 'denominational product' is transmitted by means of an operating-handle to the totalizing-counter, which is moved laterally across the machine. The depression of one of the keys *a*, Fig. 1, representing the numerals 1 to 9, actuates, by means of a rack and pinion, one of the multiplying-rollers 3, which in turn moves the corresponding series of eighteen racks 12, shown endways in Fig. 3. The multiplicand is set up by means of slides 15,

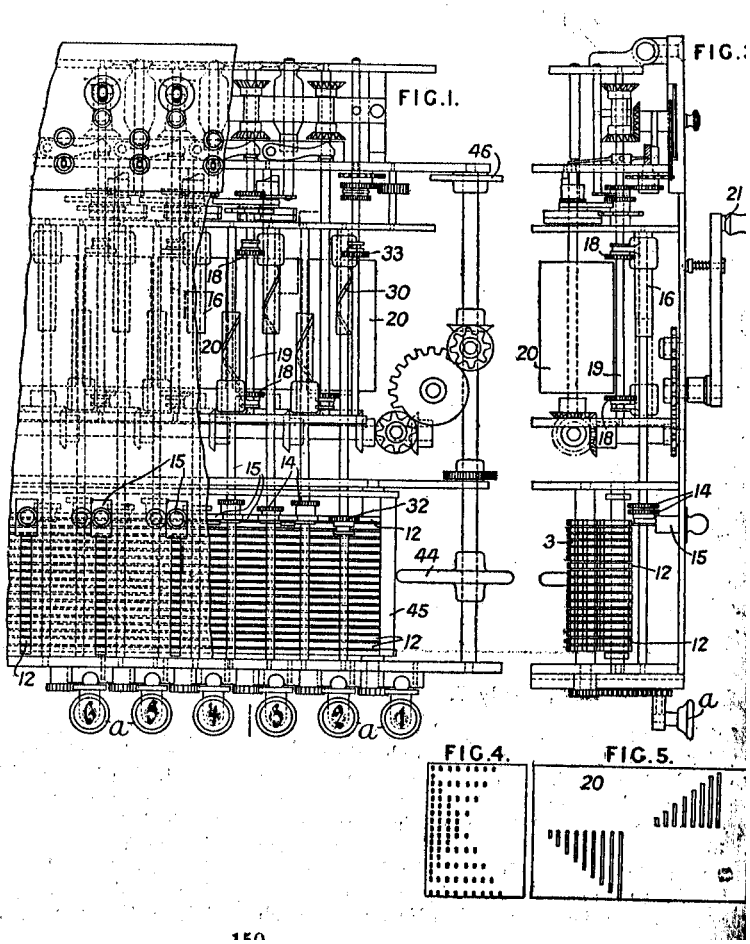

© B O B Williams Printed22/11/2023 CalcPatents Ed. 1.doc

Cossor & Flory 930/1908 Stylus adder

930. Cossor, F., and **Flory, T. W.** Jan. 14.

Calculating-apparatus.—In adding-machines operated manually by a stylus inserted in a hole of a wheel or disk, the withdrawal of the stylus is prevented from imparting a reverse movement to the disk and so causing an error in the calculation. The holes *d* in the disk *a* are accessible through a

FIG. I.

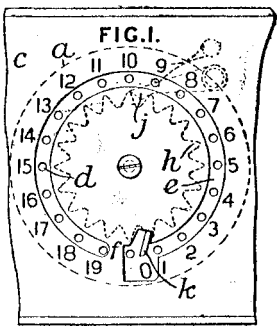

slot *e* in the dial-plate *c*, a portion *f* of the slot acting as a stop for the stylus. The disk *a* is provided with teeth *h*, with which a pawl *j* engages to prevent accidental displacement of the disk. To prevent reverse movement also, on withdrawing the stylus too rapidly, a spring non-return gate *k* is mounted between the disk and plate. When the stylus reaches the stop *f*, it cannot rebound.

Cotterell M B 19824/1898 Slide rule for batteries

19,824. Cotterell, M. B. *Nov. 23.*

Slide-rules.—The apparatus is for performing calculations in reference to secondary electric batteries, and consists of two cards A, B sliding upon one another, the upper one B being marked with a logarithmic scale b^3 of voltages, and with other data and instructions regarding certain types of batteries, the lower one A with scales a^2, a^3, the former logarithmic, of numbers of lamps and cost respectively. The scales on the lower card show through apertures in the upper card.

FIG. 4.

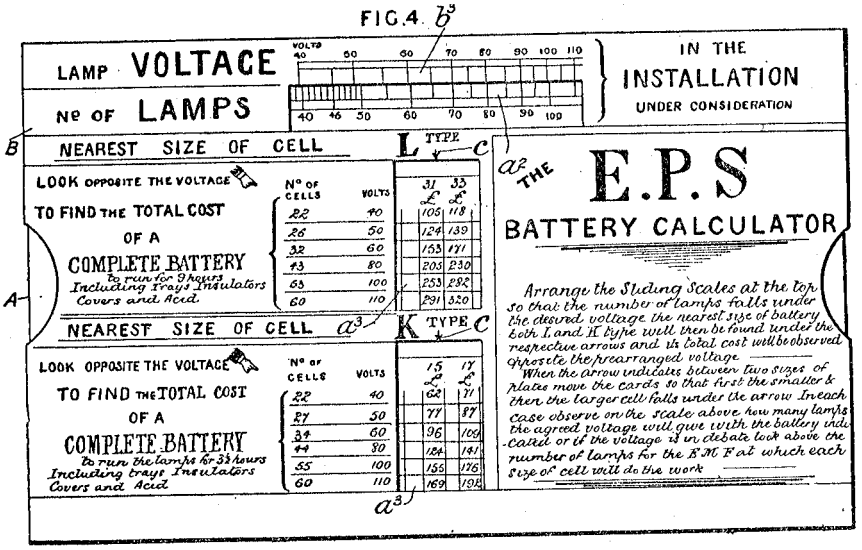

As an example of the use, if the voltage and number of lamps in a circuit is decided upon, the number of volts on the scale b^3 is brought over the number of lamps on the scale a^2. Then the nearest size of battery cell suitable is indicated under the arrow c, together with cost of working, and number of cells at the voltage desired.

Coulon G L C 2274/1877 Computing scale

2274. Newton, H. E., [*Coulon, G. L. C.*]. June 11.

FIG. 1.

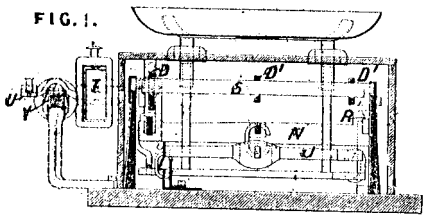

Compound-lever.—Relates to a compound-lever machine having double steelyards and to means for simultaneously indicating the price of the goods weighed. The scale pan rests by rods H upon a floating frame G which is hung at one end on the lever J fulcrumed at L and at the other end on the lever N which is fulcrumed at R. The lever J is also hung centrally on the lever N as shown. N is in turn connected by the stirrup I to a transverse lever D which is mounted on the bar S; D is bent at both ends to carry the steelyards T, U, each provided with a slider. A counterweight is carried on arms D^1, D^1, projecting from the bar S. Between the sliders is supported, by fixed brackets K, a price scale bar V of square or polygonal section having different scales on the several faces. Pointers on the sliders indicate the price of the article weighed.

Coutinho A J R 10781/1884 Adder rods and wheels

10,781. Redfern, G. F., [*Coutinho, A. J. R. d'A.*]. July 30.

Adding-machines.—Nine upright rods A are provided for working the part toothed wheel B having as many teeth as the number on the button of the rod. On the depression of one of the rods the corresponding pinion is advanced accordingly, and the rotation of its spindle is communicated by

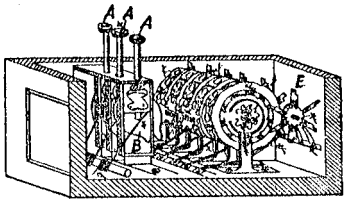

gearing to the spindle of the pinion D, which works inside the number wheels, and can be shifted to the tens, hundreds, thousands, &c., according to the column being added, by sliding its spindle longitudinally, a button being provided at the end of the spindle for this purpose. The star-wheels E are for advancing each wheel the distance of one numeral every complete revolution of the wheel next to it on the right. The wheels are set to zero by sliding the spindle of D to its initial position so as to bring D to the right of the units wheel.

© B O B Williams Printed22/11/2023 CalcPatents Ed. 1.doc

Cox E L 15101/1910 Tab calc in loose leaf book

15,101. Cox, E. L. June 23. *Drawings to Specification.*

Tabular calculators comprise a set of tables with a series of horizontal and vertical columns for the figures of the arguments, and with a series of numerals at the top left-hand corner to indicate the particular columns which are to be used together. The result of a calculation is found at the intersection of the columns. Additional tables with different sets of arguments are used in combination with the above, and all the tables are mounted on a hinge similar to those employed in a loose-leaf book.

Crabtree W S 12934/1911 Computing scales for gear wheels

12,934. **Crabtree, W. S.** May 30.

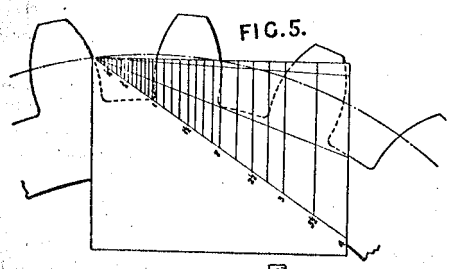

Computing - scales.— Apparatus for use in testing the pitch or for setting-out the teeth of gear-wheels consists of a plate on which are inscribed lines giving the height above and below the pitch circle of the top and bottom of

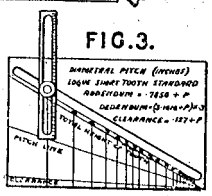

the teeth and the clearance. The plate is applied at the intersection of a tooth edge and the pitch circle, as shown in Fig. 5, wherein the pitch is measured as "2." To facilitate use, a projection may be furnished on the plate for application to the tooth, and a scale may be fitted with a clamp to engage a slot on the plate, to show the heights. Different methods of pitch measurement may be employed, and several ranges of rulings corresponding to the different methods may be provided on one plate.

Craig D I 16882/1890 Adder

16,882. Craig, D. I. Oct. 22.

FIG.2.

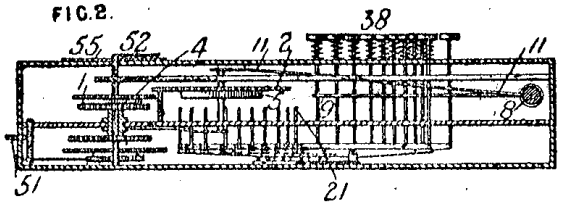

Calculating-apparatus. — Relates to adding-machines. Turning a handle shaft 51 rotates a train of wheels which wind up a spring 4 attached to a spur-wheel 1 held by a spring detent. Depressing one of ninety-nine number keys 38 raises a pin 21 into the plane of the wheel 1, and by action on an arm 9 turns a spring rock shaft 8. An arm 11 projecting from the shaft 8 depresses a wheel 2 on a spring into gear with the wheel 1, and another arm (not shown) simultaneously removes the detent from the latter wheel. The wheel 2 is then rotated till an arm strikes the stop pin 21 of the key, and an index 52 on the spindle of the wheel 1 travels round a dial 55. Complete revolutions of the wheel 1 are carried on a hundreds dial. The wheel 2 when free again flies back under the influence of a spring 5. In order to bring the pointer 52 to zero the detent of the wheel 1 is pushed aside by a special key, and the spring 4 causes rotation till a pin on the wheel is stopped by one on the key. The hundreds wheel winds up a spring which restores it to zero when a special key has depressed it below the plane of a check pawl.

Crawford E N 117982 of 1917 Tab calc for length of material

117,982. Crawford, E. N. Aug. 28, 1917.

Tabular calculators.—Relates to apparatus for showing the price of lengths of material as it is measured out, of the type in which a cylindrical chart bearing computed results is rotated by the depression of tappets spaced apart to represent units of measurement, and comprises a chart drum 13 slidably mounted on a shaft 12 and held in locking engagement with a ratchet wheel 23, fixed on the shaft, by a spring 26. The ratchet wheel is rotated, to an extent depending upon the value of the tappet 17 depressed, through a hinged plate 19, Fig. 3, and pawl-lever 20. The drum carries a pin 25 normally engaging one of a series

FIG.2.

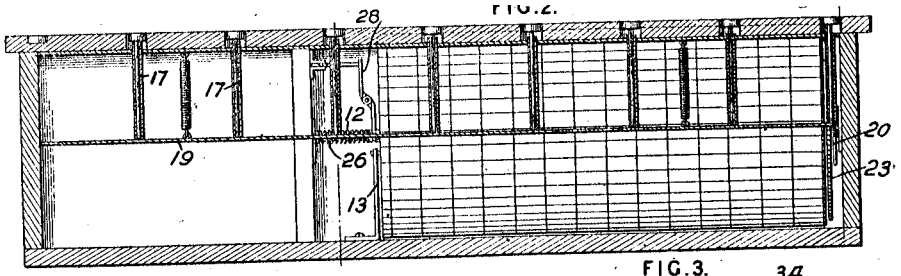

FIG.3.

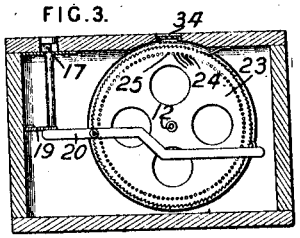

of holes 24 in the ratchet wheel, but is unlocked by means of a finger piece and a lever 28, and returned to zero position by the spring. The results are shown through a transparent fixed chart 34 marked in prices per unit length. The casing of the apparatus may form part of a shop counter.

Craufurd J J W 10314/1890 Circular slide rule for railway cuttings and curve calculation.

10,314. Craufurd, J. J. W. July 3.

FIG. 2.

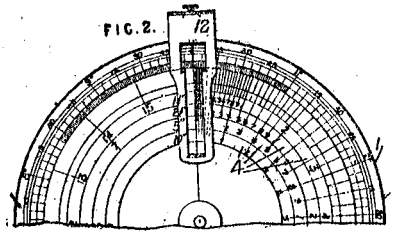

FIG. 3.

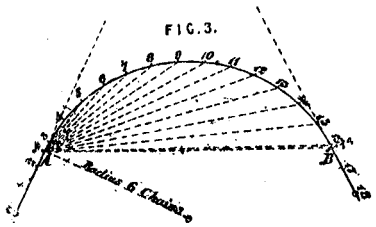

Calculating-apparatus.—The instrument, shown in Fig. 2, is constructed to determine angles required in plotting out a railway curve between two points, as shown in Fig. 3. The instrument gives the angles between the tangent at the origin and the lines to successive points of the curve. It consists of a series of concentric graduated circles, of which, on the same radial line, the outermost one 1 shows the tangential angle corresponding to arc (or really chord) lengths shown on the inner ones 4 for curves of given radii. The inner circles are drawn on cards, which can be rotated relatively to the outer circles to facilitate use in reading sums of equal chords after a fraction, as in Fig. 3, where the chord lengths advance by 1 chain after the first, which is ·4 chain. A hinged slotted reading-piece 12 is provided for the inner circles. The degree graduations on the inner circles indicate the applicability with the American degree system.

Cressey T S 1146/1858 Wages tab calc

1146. Cressey, T. S. May 22. [*Provisional protection only.*]

Calculating-apparatus.—Tables for calculating wages are printed on an endless band which is mounted on rollers in such a manner that one of the columns of figures may be brought into position at a particular part of the frame. At this part of the frame there are covered openings, generally twelve, for several days and double days of a week, nine for the hours of a day, and three for fractions of an hour. There is also an opening through which can be seen the amount of a weekly wage, which the column then in position is calculated for. The person using the apparatus turns a handle till the desired amount of weekly wages is presented at the opening, then the amount of weekly wages is read off by opening the covers representing the days, hours &c.

Cromey J H 11471/1905 Tab calc for butchers

11,471. Cromey, J. H. June 1.

Calculating-apparatus.—An appliance for ascertaining the retail prices for different parts of an article such as a side of bacon with reference to its wholesale price consists of a table *a* of numbers and a movable slide *c*. The numbers are arranged in columns, giving at the top the different prices per lb. and per cwt. at wholesale rates, and below these, the corresponding prices for the various parts and other particulars. These figures are arranged opposite the corresponding names on the slide *c*, which may also bear indications as to the approximate proportionate weights of the different parts. A sheet of glass is interposed between the printed tables and the slides, or the tables may be painted or otherwise delineated on the glass itself or on other plates or sheets.

FIG. 1.

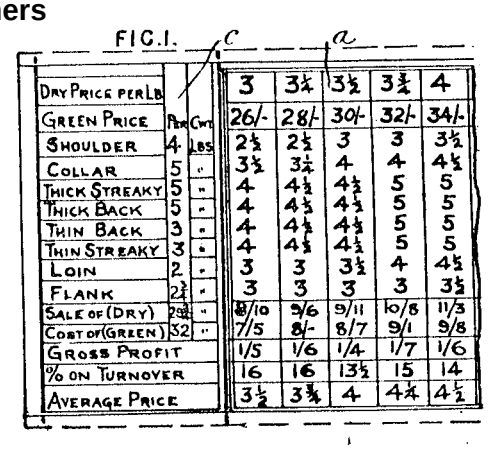

Crompton & Gallagher 128878 of 1919 Slide rule for steam

128,878. Crompton, J., and **Gallagher, W.** March 6, 1919.

FIG.1.

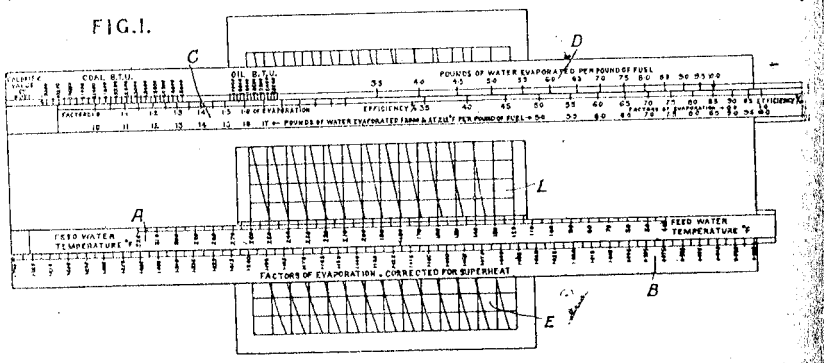

Slide-rules. — A computing-apparatus for determining the thermal efficiency of steam-generating plant from observed readings of boiler pressure, and feed-water and steam temperatures, comprises a chart E slidable vertically beneath a horizontally sliding scale A and a fixed scale B. The horizontal lines on the chart denote boiler pressures or corresponding temperatures of saturated steam, the vertical lines represent heat values of superheated steam, and the curves refer to degrees of superheat. The factor of evaporation resulting from the use of the above chart and scales is utilized to obtain the efficiency by means of the logarithmic sliding and fixed scales C, D, graduated as shown.

Crosley W 15959/1902 Slide rule chart on cone

15,969. Crosley, W. July 17.

FIG. 1.

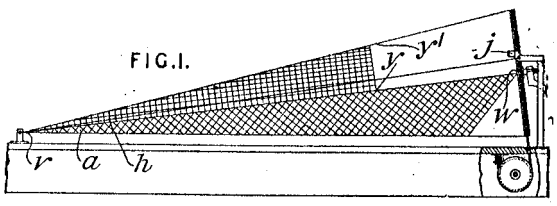

FIG. 2.

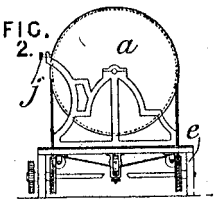

Calculating - apparatus. — A slide-rule or calculator for ascertaining at a glance the $\frac{m}{n}$th part of a number, where m and n have given values, comprises the cone a having a chart inscribed upon its surface, the straight wire or band h held close to the cone, and means for rotating the cone. Mounted on the stand e is the milled-headed screw j with a rubber or leather tip adapted to keep the cone at rest in any desired position. Band or cord and pulley gear rotate the cone. The cone chart is inscribed with the lines

Crutchley C F 112530 of 1917 Scale for tuning musical instruments

112,530. Crutchley, C. F. Feb. 1, 1917.

FIG. 3.

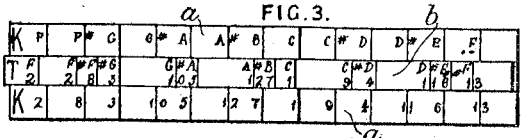

FIG. 5.

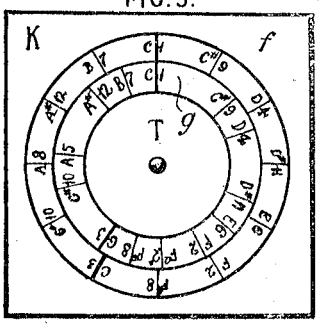

Computing-scales for use in tuning musical instruments. A sliding or rotary scale is graduated for the comparison of equal temperament and just intonations; directions for use may be given on the back. As shown in Fig. 3, a rectilinear sliding-rule has one stationary member *a* marked with equally spaced divisions representing equal temperament, and with numbers indicating the sequence for tuning, and has a second slidable member *b* marked with unequal divisions representing the perfect intervals. As shown in Fig. 5, a card *f* and pivoted disk *g* are similarly graduated.

Cunq L 1647/1858 Calculating apparatus circular slide rule for liquid flow rates

1647. Cunq, L. July 21. [*Provisional protection only.*]

Calculating - apparatus.—In a circular slide rule for computing the quantity of liquid running through an orifice of given diameter, under a given pressure in a certain time, one circle is fixed and three others are centered on it. The divisions on two of the movable circles are made to the same angular scale as those on the fixed circle, though in the opposite direction, but the divisions of the third circle are made to only half the scale of the others, the unit being half the circumference.

Cuttriss S W 8285/1889 Circular slide rule

8285. Cuttriss, S. W. May 18. *Drawings to Specification.*

Calculating-apparatus.—Consists in constructing computing-scales in the form of discs and rotary rings instead of straight rules.

Drawing from Full Cuttriss Patent
The full Patent refers to "my earlier form of the instrument. But no earlier patent found.

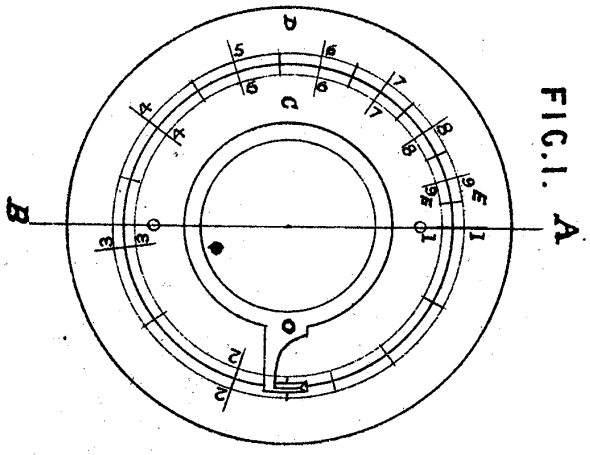

FIG. 1. A.

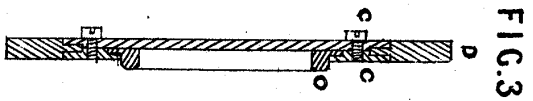

FIG. 3.

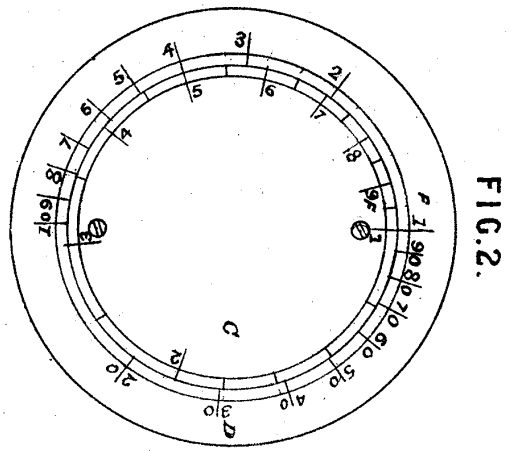

FIG. 2.

© B O B Williams Printed22/11/2023 CalcP

Daemen Schmid H 15964/1908 Broken scale slide rule on cylinder

15,964. Schmid, H. Daemen-. July 27.

Calculating-apparatus.—The cylinder *b*, Fig. 3, of a logarithmic calculating-apparatus is provided with a detachable cover or mantle *a* bearing a number of logarithmic scales, which are used in conjunction with logarithmic or other scales or tables of constants upon the cylindrical slide *c*, movable prism *e*, and sheet *i*, mounted upon rollers *g*, g_1. Pointers *l*, *l*, l_1, l_1, Fig. 2, connect the readings upon either side of the sheet *i* with those given by the cylinder *b*. The slide *c* is a framework or cage consisting of rings *t*, t_1 connected by bars *s* of various forms bearing scales and provided with coloured pointers, of which several forms are described. Graduated detachable rings *f*, f_1 are fitted on the axis of the cylinder *b* and are used in auxiliary calculations. The slide is provided with clamps in order to retain it in a definite position to the cylinder *b*. To remove or exchange the slide *c* or mantle *a*, the cylinder is turned on its hinged bearing *q* as shown in Fig. 1. An adding-machine p_1 is attached to the framework to facilitate the various kinds of calculations that may be performed with the aid of the apparatus.

FIG. 3.

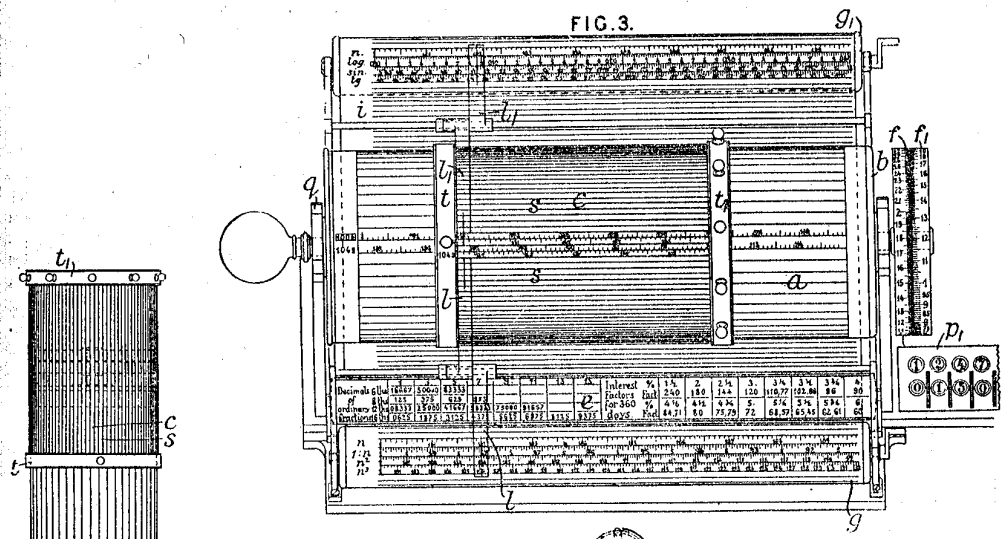

FIG. 1.

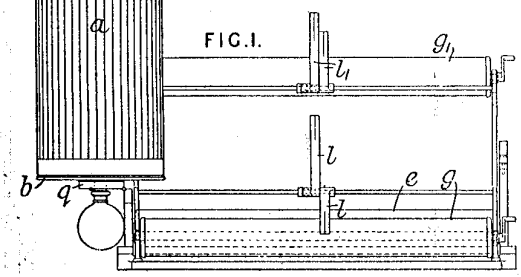

FIG. 2.

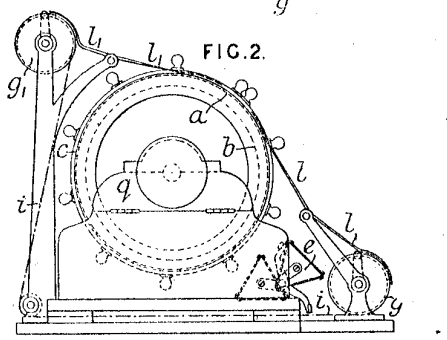

Examples are given of the use of the instrument in solving problems connected with reduction, discount, estimates of cost, powers and roots of numbers, logarithms, and the trigonometrical solution of triangles.

Daemen Schmid H 20301/1909 Thomas type

20,301. Schmid, H. Daemen-. Sept. 4.

Multiplying-apparatus; keyboards.—In calculating-machines of the Thomas and similar types, the axially-movable pinions engaging the stepped drums are set by means of a separate bank of numeral keys for the pinions of each denomination. Each pinion may be reset independently, or all may be simultaneously reset. Several forms of apparatus are described, all of which comprise a spring-driven drum carrying, around its periphery, numerals which are exposed through sight-holes in the case, to show in a straight line the figures of the number set on the machine, and operating a sliding member connected to the axially slida e

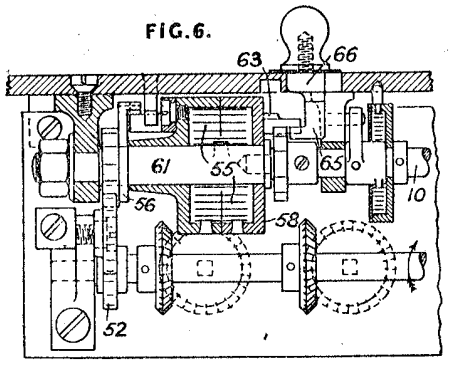

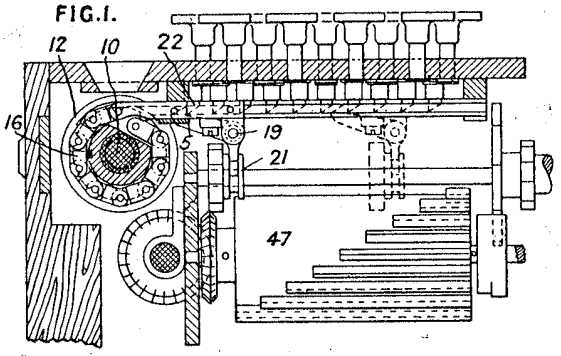

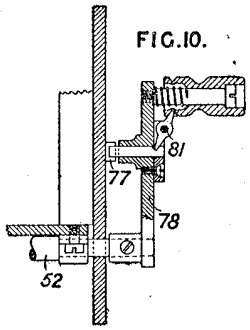

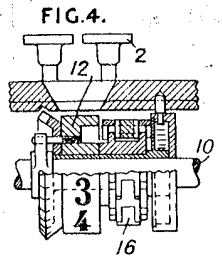

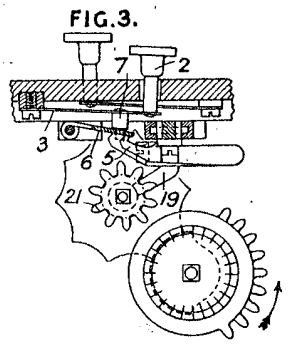

pinion, which is normally held by a stop at zero position; but, when a key is depressed, the spring moves it up to the depressed key. In the form shown in Figs. 1, 3, and 4, the spring drum 12 loose on the shaft 10, tends to slide the chain 16 along guides, but this motion is prevented by the spring-pressed hook 5 on the pinion-moving member engaging the projection 22. When a key 2 is depressed, the pivoted bar 6 is moved downwards against its spring, thereby moving the hook 5 and allowing the spring drum 12 to push the chain to the right of the figure until the hook 5 engages the pin 7 of the depressed key. As soon as the key is released, its spring 3 lifts it and the hook 5, which is held in its operated position by the pin 7 of the key. The arm 19 of the hook 5 engages and moves the axially-movable pinion 21 along its shaft, so as to cause it to engage the proper part of the stepped drum 47. In a modified construction, the pinion is moved by a member fixed on an endless band or chain driven by the spring drum 12, the hook member being released by depression of a spring-pressed tilting bar moved by the depressed key, and held, when the key is released, by notches in the tilting bar, which rises by the action of its springs and lifts the depressed key with it. In two other modifications described, the hook member is moved by a rack operated from a pinion on the spring-driven member 12, the rotation of which is controlled by a ratchet-wheel and a pawl controlled by the depressible keys. In the first of these modifications, the pawl is moved by a sliding rack with inclined teeth which are engaged by similar inclines on the keys; and in the second, the pawl is on one arm of a bell-crank actuated by a tilting bar which is rocked by the depressed key.

Resetting.—The setting-mechanisms of each denomination may be reset as desired, separately either by means of a milled head projecting from the case or by a handle on the sliding member carrying the hook 5, or simultaneously, either by a special handle or a slide, or automatically at the end of the calculation by gearing, Fig. 6, actuated by the operating-crank 78, Fig. 10. The crank 78 is fitted with a trip lever 81 rocked by the handle so as to hit or miss the stop 77 at the completion of each revolution of the shaft 52, which is geared with the shaft 61 carrying the arm 56. By means of spring pawls and stops, the arm 56 in one revolution winds up a strong spring 55 so as to set the drum 58 ready to reset the shaft 10. The resetting is prevented by a stop 66 when in the position shown in Fig. 6, which is that for "multiplication." When the stop 66 is moved to the right for "addition," or at the end of a multiplication so as to remove the stop 65 from the pawl 63, the drum 58 drives the shaft 10 and restores the whole of the setting-mechanism to zero.

Daniel LM & RM 13100/1909 Adder on typewriter

13,100. Daniel, L. M., and **Daniel, R. M.** June 5.

Adding-apparatus; attachments to typewriters.—Relates to key-set key-operated machines operated from the numeral keys of a Remington typewriter, in which the adding-mechanism is mounted on the carriage of the typewriter, the adding-wheels being brought successively opposite a reciprocating master-actuating rack provided with ratchet teeth, and actuated by the numeral keys of the typewriter. Figs. 1 and 4 are perspective views of the adding-machine attachment and totalizing mechanism respectively, and Fig. 9 is a view of the mechanism for guiding the rack.

Selecting denomination; differential mechanism.—The numeral wheels 13 of the totalizing-counter are actuated by a single rack 32 through gear-wheels 16. The rack 32 is mounted between yokes 34, pivoted to blocks 35 slidable in guide-bars 36, and is adapted to be swung forwards about its

D 2

lower end by pressing the tabulator keys whereby, through a pivoted U-shaped bar 45 and wires 42 when the detents 39 have been depressed, the rack is allowed to move forwards, the detents 39 then

FIG.1.

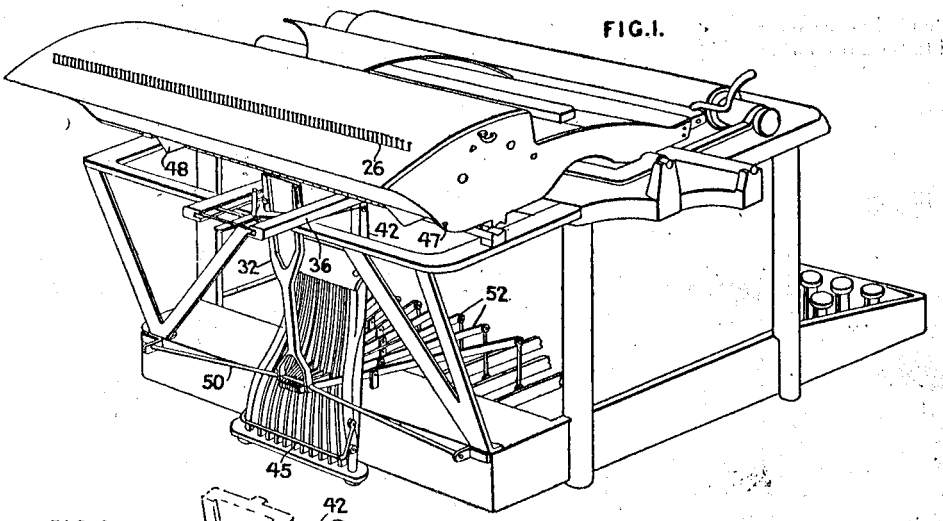

FIG.2.

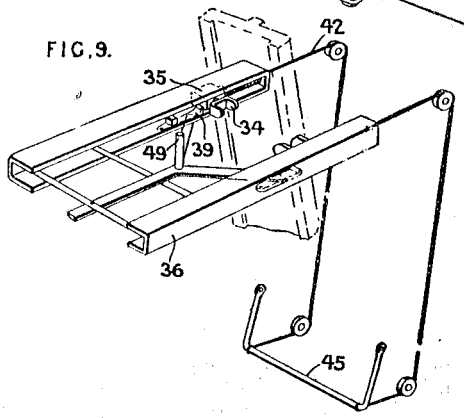

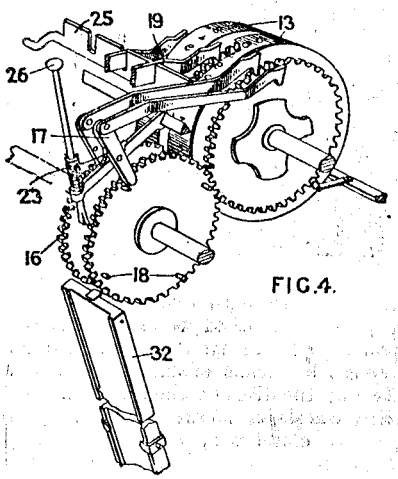

FIG.4.

locking the rack in this position. The detents have an arm 49 adapted to be depressed by trips 48, which can be positioned at different points on a bar 47 in the casing. The lower end of the rack is pivoted to a U-shaped frame 50, and rests upon the rear ends of levers 52 connected to the numeral key-levers, so that, on depression of a key, the rack is raised by an amount depending on the particular key depressed, the levers 52 being pivoted at different points in their length. The teeth of the rack are pivoted so as to act only in the upward direction.

Transfer mechanism.—Pins 18 on the gear wheels rock a carrying-lever 17 and thereby draw a pawl 19 rearwards to turn the next higher adding-wheel through one unit. Springs 23 are provided to return the carrying-levers 17 to operative position.

Zeroizing-mechanism.—The adding-wheels are reset to zero by depressing plungers 26 after the transfer pawls 19 have been raised out of gear by rocking a resetting-bar 25.

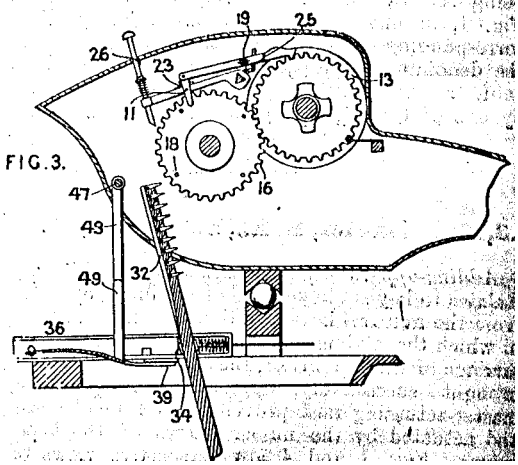

FIG.3.

© B O B Williams Printed22/11/2023 CalcPatents Ed. 1.doc

Darling J 4592/1879 Calendar on strips

4592. Darling, J. Nov. 11.

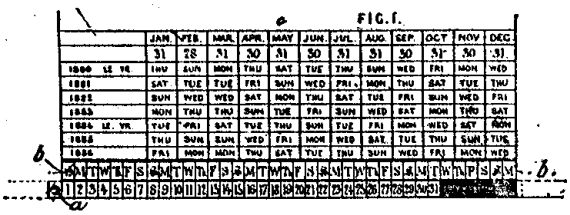

Calendars for ascertaining any date throughout any month, and for ascertaining any prospective date during any given series of years. Let into the tablet *c* is a movable strip of wood or other material *a*, numbered from 1 to 31. Above it are the initials of the days of the week as shown in the line *b*, *b*, so that by adjusting the figure 1 to the initial of the first day of the month the rest follow in due order. By means of a table giving the first days for each month for any given series of years, the strip *a* may be adjusted to give corresponding days and dates for any year. The strips *a*, *b* may be adapted to penholders &c.

Abridged also in Class *Writing-instruments &c.*

Darling J 5113/1879 Circular adder

5113. Darling, J. Dec. 13.

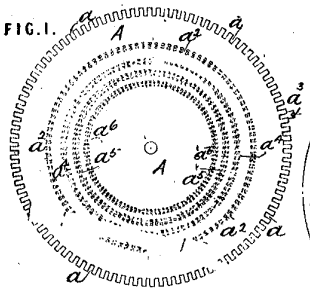

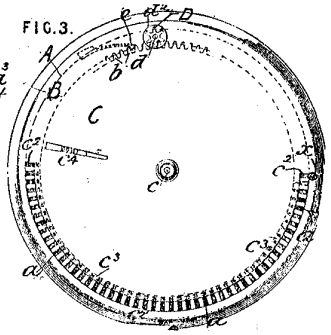

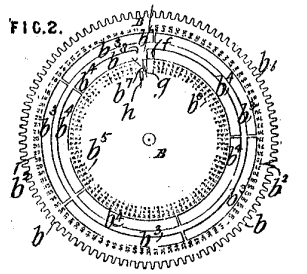

Calculating-apparatus.—The edge of the lower plate A has 100 notches a, a and the circle a^2 is divided into 100 parts, numbered from 0 to 99. The circle a^4 gives the value of a number of pence in the circle a^2, a^5 the value of 100, plus the number on a^2. The upper plate B has on its edge 100 notches b, and the circle b^2 is divided into 100 parts numbered 0 to 99, and the ring b^5 shows the value of pence from 300 to 9900. The slots b^3, b^4 allow the figures on the lower plate to be seen. The two plates are fitted in a case C in which is a slot c^4 to show results. They turn on a stud c. The plate B is steadied by a spring catch resting on its teeth. Upon a stud d is a pinion d^2 with milled head D, which may be turned for counting hundreds or for setting the machine. In the cover C is a semicircular slot c^2 divided into 50 equal parts c^3. To add numbers together a pointer is put into a notch a opposite the number c^3 and pushed round till stopped at X; the same is done successively with all the numbers to be added, when the sum will appear under the slot c^4. When the plate A has made one revolution the pin a^3, through the pinion d^2, rotates the plate B one notch showing 100 in the slot c^4, the numerals being arranged to read in their proper sequence. Up to 300 the money values are read off the circles a^4, a^5, a^6, the slots g and h being brought as required under slots c^4 and the parts b^7, b^8 coming under the slot to cover the figures not required. By reversing the motion of the machine, it may be used for subtracting. The machine may be varied by using more plates or plates differently divided, or both, to adapt it to other and more complex additions. The slot c^2 may be more or less than a semicircle.

Darnley & Richards 167699 of 1921 Tabular calculator

Abstract

A device for facilitating the learning of multiplication and division com-prising two superimposed hollow cylindrical mem-bers *a, b,* relatively rotatable, of which the inner member b is provided with two sets of tabulations g, h one for the products and the other for the multiplier and the outer member a is provided with a single set of tabulations f for the multiplicand and with a series of openings e arranged in a helical line, has the inner member extended at its left end to serve as a handle which can be gripped when the device is in use, and has the tabulations so arranged that the resultant product can be obtained by reading from left to right. When the members *a and b* are made of metal they may be rolled or bent from strips and jointed as shown at Fig. 2, the member a is freely rotatable but is prevented from movement axially by collars or ridges c formed on the projecting end portions of the member b. Caps j, k are pro-vided of which one *k* is removable so that its member *b* may serve as a holder for pens, pencils &c. The device may be employed as a ruler.

Picture BOBW collection



Davis & Son 101051 of 1916 Slide rule construction

101,051. Davis & Son, J., and **Davis, W. H.** Feb. 16, 1916.

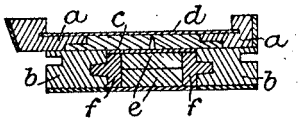

Slide-rules.—The body *a* of the rule and the centre *e* of the slide are made of mahogany, and the sides *b*, *f* of boxwood. The sides *b* are connected by a piece *c* of celluloid and a metal strip *d*. Celluloid reading-faces may be provided.

Davis & Son 115981 of 1917 Slide rule construction

115,981. Davis & Son, J., and **Davis, W. H.** Aug. 7, 1917.

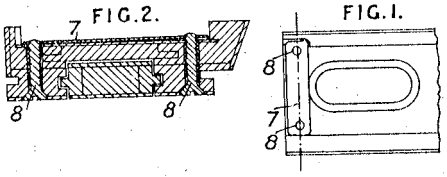

Slide-rules.—The tightness of the slide is adjusted by cross-plates 7 having inwardly-turned ends, with which engage screws 8 passing through the body of the rule.

Day A J 11767/1899 Local time disks

11,767. Day, A. J. June 6.

FIG. 7.

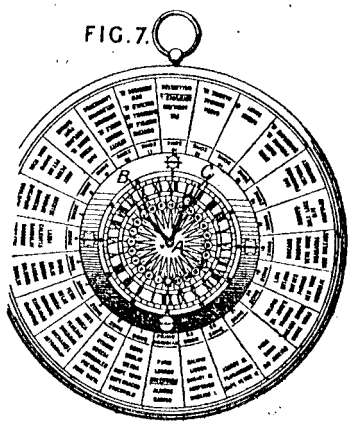

Indicating local times.—The simultaneous time in zones of fifteen degrees of longitude is indicated

Dean H 90/1866 Plotting & computing scale

A.D. 1866.

90. Dean, H. Jan. 11.

Computing - scales. — Fig. 1 shows a plotting and computing scale for surveyors and engineers. The main scale is marked only in main divisions, and short subdivided scales E are provided, screwed to crossbars *c*, which are attached to pieces sliding in grooves in the sides of the main scale. A projection *f* from one of the crossbars *c* carries a pricker, Fig. 7, consisting of a needle, held up by a spring *h* and depressed by pressure on its head. From one of the pieces sliding in the groove in one of the sides of the scale, a piece *i* projects, and carries the offset scale B, which is fastened to it by screws *l*. This scale is provided with a

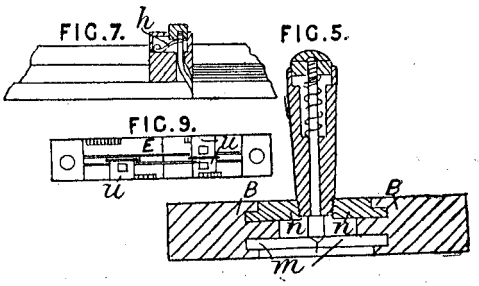

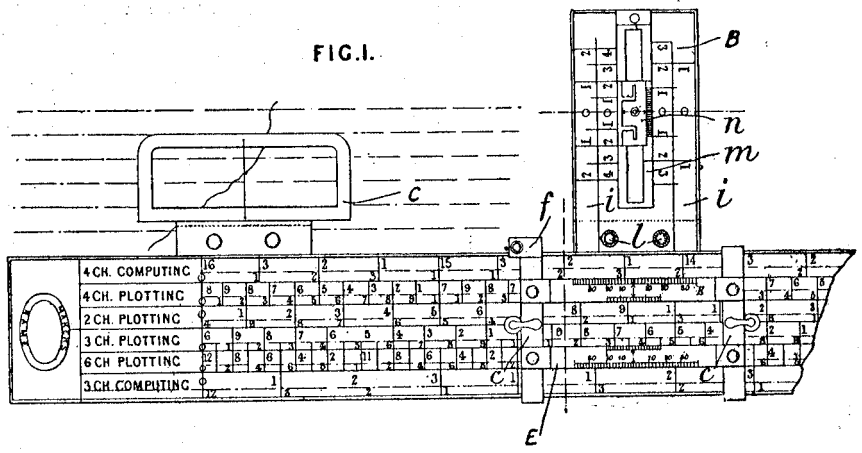

l subdivided scale *n* sliding in grooves *m* ovided with a pricker, Fig. 5, opposite the f the scale. Fig. 9 shows another form of ided scale, in which small plain hinged *u* are used to cover that part of the scale not in use. These pieces may be used on any of the scales. The computing-frame C, Fig. 1, is mounted on the main scale in the same way as the offset scale.

Dees M A 4772/1902 Computing weighing scale

4772. Dees, M. A. Feb. 25. *Drawings to Specification.*

Computing-scales.—The drum of a computing weighing-scale contains graduated cylinders for computing the value of the load weighed, but is also devised so that it can be used independently of the weighing scale proper. The cylindrical surface and the ends of the drum are graduated so that they can be used in conjunction with fixed scales for computing the value per dozen of eggs &c., or the value of definite amounts of bran &c. at a given price.

Dennis A S 15709/1900 Adder printer

15,709. Dennis, A. S. Sept. 4.

Calculating-apparatus ; counting-apparatus.—Relates to apparatus for printing columns of figures, adding them, and printing their total. One bank of keys 3, Fig. 5, only is employed, the transverse feed of the carriage 5, when any key is struck and its amount registered and printed, providing for the different denominations, units, tens, hundreds, &c. When any key 3 is struck, it depresses the bar 18 of a frame rocking on the shaft 19, and the arm 20 thrusts the spring rod 21 to the right ; a head 22 on this rod, striking a projection 23 on a vertical spindle 16, rocks it, and so operates a double pawl escapement. This escapement has two functions ; it allows the shaft 27 to turn under the action of a spring bolt 30 so as to throw the printing-hammer 26, 25 forward to take an impression, and it then returns the hammer and allows the escapement-wheel to turn one tooth. The carriage 5 runs on ball races 6, and is fixed to an endless band 12, which passes round pulleys 10 ; one pulley is driven by a coiled spring, controlled by the escapement. Each key gives a movement, proportionate to the number marked upon it, to the shaft 56 by means of projecting arms 54

388

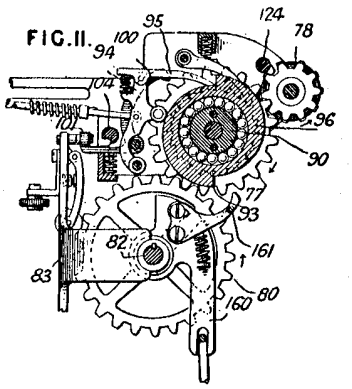

of different lengths acting on a plate 55, and thus through the section 86 actuates the adding and total-printing wheels 77, 78. The end of the shaft 56 is bevel-geared with a shaft 60 carrying a crank arm 61 which is linked to a type plate sliding in the guides 53. In this way the type required is brought under the hammer 25, and the number struck on the paper strip 51[a] by means of a

FIG. 5.

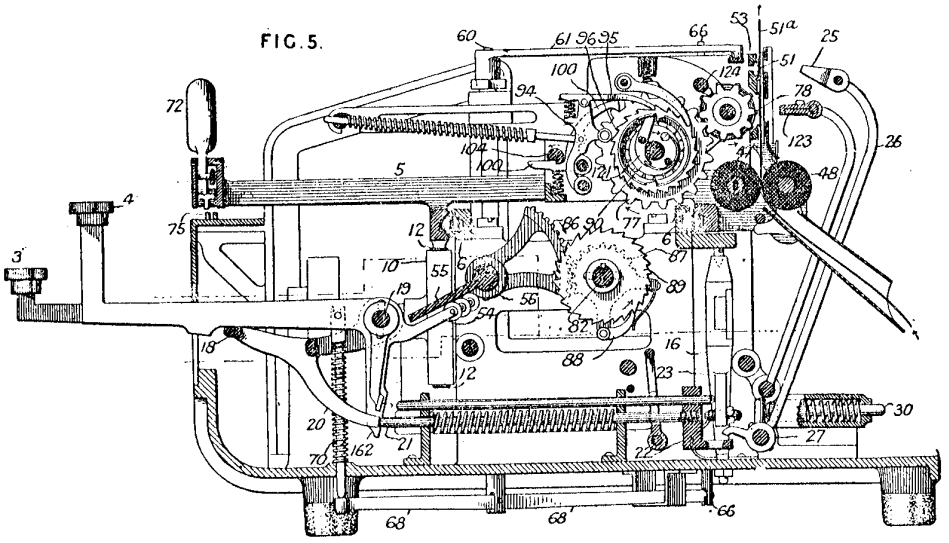

transfer strip 51. To position exactly the arm 61, each key presses down a spring rod 70, and, by means of a lever 68, throws up a spring stop-rod 66 into the path of the arm. The sector 86 acts, through the sector 87, pawl 88, and ratchet-wheel 89, to drive the shaft 82 always in one direction. A sliding bracket 83, Fig. 11, secured to the endless carriage band, moves a wheel 80 along the shaft 82, as the carriage is fed step by step, and engages it successively with the adding-wheels 77 of different denominations, and these wheels in turn set the total-printing wheels 78. A stop mechanism 160, 161 to prevent over-driving is actuated at each depression of a key by the projection 162. "Carrying" is effected by the action of cams 93 upon pawl arms 94, the pawls 95 of which engage ratchet-wheels 96 on the adding-wheels of next higher denomination. The adding-wheels, cams, and ratchets are formed as annular rings turning on ball bearings about the hubs 90. Initially the carriage 5 is set by hand in position to print the number of highest denomination, a series of pivoted spring-levers 72 adapted to engage "staggered" stops 75 being provided for the purpose. Whenever a lever 72 is operated to set the carriage, the movement actuates the feed-mechanism of the rollers 47, 48 to space the lines of figures vertically. If the carriage be accidentally set wrong, a key 4, which operates the spacing-mechanism but not the hammer 25, is used to bring it into the correct starting place. Locking-pawls 100 are provided for the adding-wheels, and are thrown successively out of action by a roller 101 as the bracket 83 brings the wheel 80 into gear with any adding-wheel. A cam shaft 104, turned by gear from an external handle, releases all the locking-pawls when the zeroizing-pawls 121 are operated by the gear to bring the adding-wheels to zero. Means are provided, however, actuated by an external push-piece, for throwing some of this gear out of action when it is desired to take a total without zeroizing. The total-printing hammer 123 is operated by a spring arm and a cam included in the gear just mentioned ; another cam, however, first allows the hammer to move transversely over all the total-wheels from which a print is to be taken, but the hammer is stopped when it comes to the wheels showing zero so as to prevent the printing of meaningless ciphers. For this purpose the hammer is connected to a transversely-moving rod 124 having a spline working in gaps at the zero point of the total-printing wheels 78. When the spline comes to a wheel which has moved from zero, it strikes the full part of the wheel and is arrested. The gear actuated from the external handle also includes means for feeding the paper a short distance down to take the imprint of the total, and then throwing it up in sight of the operator.

© B O B Williams Printed22/11/2023 CalcPatents Ed. 1.doc

Denny & Gray 6640/1895 Ship's metacentre

6640. Denny, A., and **Gray, W.** April 1.

Calculating-apparatus for ascertaining the matacentric height of a ship. The apparatus employed consists of a board A which, when in use, is placed in a vertical athwartship plane, and has near its upper edge a spirit-level B capable of adjustment by means of a micrometer screw D. Secured to the board is a grooved frame E on which slides a vertical bar F. A second bar G is pivoted to this frame at one of the lower corners, and is slotted as is the other bar F to accommodate a clamping screw H. The top and bottom and one side of the frame E and the vertical bar F are graduated in the manner shown. In using the instrument, the spirit-level is first adjusted, then a known weight W is moved across the deck through a distance *d* and the level again adjusted, difference between the readings being noted. The vertical bar F is then placed with its graduated at a point on the lower scale corresponding to the said difference on the micrometer readings. The W is multiplied by the distance *d* and the product is divided by the vessel's displacement at the at which the experiment is made. The bar G is now clamped on F at a point corresponding quotient obtained as above, and the metacentric height is read off where the bar G cuts the top or the frame E.

FIG. 1.

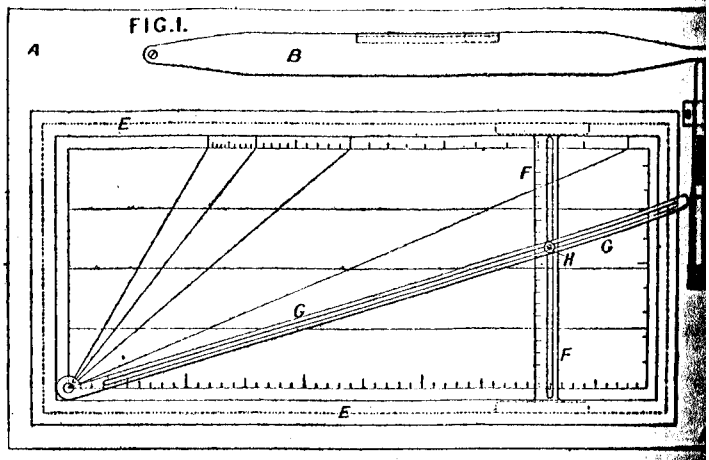

Des Jardins B M 11414/1900 Calculating type writer

11,414. Des Jardins, B. M. June 23.

Receipts, checking and recording; calculating-apparatus.—Relates to calculating or computing registers specially applicable to type-writers. The register is enclosed in a cylindrical case 1 having a straight slot or opening 14 and secured to the type-writer frame by a bracket. Six indicator bands or rings 8, representing units, tens, &c., and graduated with large characters for addition and small characters for subtraction, are confined between annular flanges 8. Each ring, except the units ring, has internal teeth 20 to engage pinions 21 on a shaft 22. Each ring, except the last, has an annular flange 23 engaging a recess in the adjacent ring and carrying a double-toothed segment 23*a* engaging one of the pinions 21. Alternate teeth on the pinions 21 are wider than the others, and the flange 23 rests on two of the wide teeth, when the pinion is elevated, so as to prevent turning of the pinion unless the narrow teeth are engaged by the segment 23*a*. The rings 3, except the first, have ten internal driving-teeth 24

[1900

to the left of the teeth 20. A pinion block 25 and locking-plug 26 may be reciprocated, but cannot turn in the casing. The block 25 is chambered at 29 to receive the pinions 21 and the operating-mechanism for the rising and falling carrying-blade 30 engaging a slot 31. The pinion shaft 22 is connected by arms 32 to the blade 30, which has slotted lugs 33, engaging an operating-pin 34, and its sides are indented to ensure alignment of the pinions with the teeth 24. Cross-bars 36 have V-shaped ears 37 to align the teeth of the pinions 20 when these are lowered. The pin 34 is carried by a rocker arm rigidly connected to a shaft 38 which telescopes in a rock-shaft 40 having slots 42 engaged by a pin 41. The locking-plug 26 has an external rib 43 to engage the teeth 24. A shaft 44, secured in place by a disc 46 and having a bearing in the right-hand end of the block 25, carries an annular driver 47 having a tooth 48 to engage any of the teeth 24. A collar 49, fast on the shaft 44, connects the several laterally-moving members together. A rod 50, connected to the head 25, is forced to the left by a spring 51. The shaft 44 telescopes in a shaft 53, to which it is connected by a pin and slots. The shaft 40 carries a rocker arm connected by a rod to the regulation carriage-shift bar of the type-writer, this bar being depressed by the ordinary key and space levers. A horizontal rod, fastened to the paper carriage, has notches at intervals corresponding with the graduations on a scale on the type-writer. An angular pivoted arm bears against the head of the rod 50 and a sleeve adjustably connected, by a set-screw, to the notched rod. The sleeve carries a pivoted tripping-lug having steps or shoulders, the lowest of which drops by gravity against the top of a fixed frame, except when a cam plate, adjustably connected to a fixed plate by a slot and screw, is encountered. The driver shaft 53 extends through a case 69, Fig. 15, and is driven by a clock-movement consisting of a gear 70, on a stud 71, and a pinion 72 on the shaft 53, and controlled by an escapement operated by the figure-key levers and the carriage-shift bar. A spring-actuated pawl 75 and a ratchet 76 are provided to enable the spring to be wound. The shaft 53 carries a wheel 68, having teeth on both sides, and a splined sleeve 77 carrying a loose stop disc 78 carrying pins 79 and 80 and stops 81, 81^a, and 81^b. A pivoted shifter 82 of bell-crank lever form is attached to the shift bar, its upper end being bifurcated. One bifurcation 82^a normally engages one of the left-hand teeth of the gear 68, while the other bifurcation 82^b engages a groove 77^a in the sleeve 77. An extension from the case 69 lies in the path of the stop-pin 80, and is connected to the disc 78 by a spring which tends to retain the disc in its normal position. Ten rock-shafts, in the bottom of the case 69, carry rocker arms pivoted to the figure-key levers by straps, cylinders, and plungers, each shaft being returned to normal position by a spiral spring. These shafts carry other rocker arms adapted to project rods into the path of the stops 81 &c. A cut-out finger, adapted to engage the gear 68, is connected to a rock-shaft, and is held in engagement by a spring and released by a cut-out key engaging a stop on the frame. In a modification, the operating-levers, carrying stops, are pivoted to a shaft under the type-writer key levers. Pins on the shaft engage recesses in the hubs of the levers, the size of each recess governing the extent of movement. An escapement shaft, arranged parallel to the operating-shaft, carries a series of radial stop-pins, and a shaft in line with it and actuating the adding-machine is operated by a motor and carries a slidably-connected escape-wheel having ten teeth on each side and normally locked by a

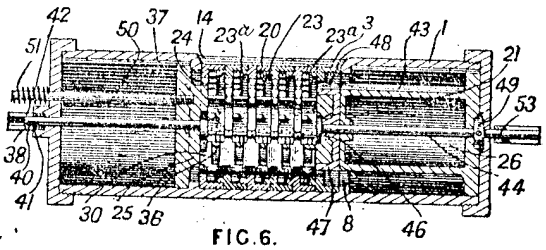

FIG.6.

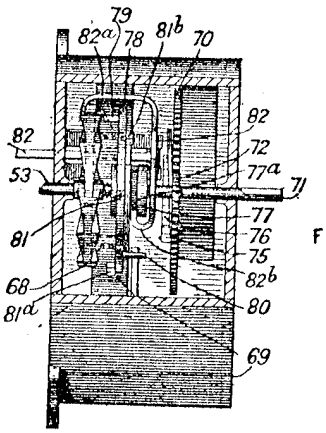

FIG.15.

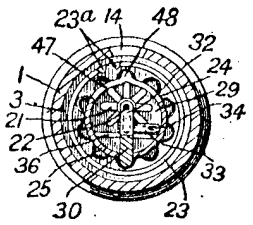

FIG.4.

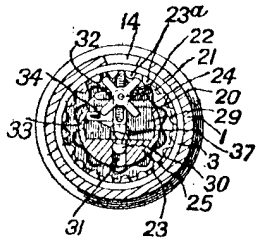

FIG.5.

© B O B Williams Printed22/11/2023 CalcPatents Ed. 1.doc

Dicas J 1259/1780 Hydrometer Chrono

DICAS.
27th June 1780.

1259. A grant unto JOHN DICAS, of Liverpool, in the county palatine of Lancaster, brandy merchant, of his new invented method of constructing the hydrometer, and also a sliding rule adapted thereto, by which the real strength and comparative value of spiritu liquors, malt worts, and wash for fermentation may be exactly ascertai , which he apprehends will be found very beneficial to the revenue and su ects; to hold to him, his exors, admors, & assigns, within England, Wales, and town of Berwick-upon-Tweed for the term of 14 years pursuant to the statute; with a clause to inroll the same within four calendar months from the date hereof. W. H. M. at Westmr, the 27th day of June, in the year above. By writ, &c.

Dicker S G S 830/1914 Statistical machine

830. Dicker, S. G. S. Jan. 12

Statistical machines. — Relates to electric systems for registering wages and costs upon counters according to passage of time, provision being made for varying the rate of actuation.

532

ording to the workman or the time of day, d for separating out and segregating various rges such as those for a job, those for nagement, and other fixed charges.

Counters actuated by electric means. — The registers employed are of the kind shown in Figs. 2 and 5, having a core 11 surrounded by a coil 12 with a spring armature 15, which is

FIG. 1.

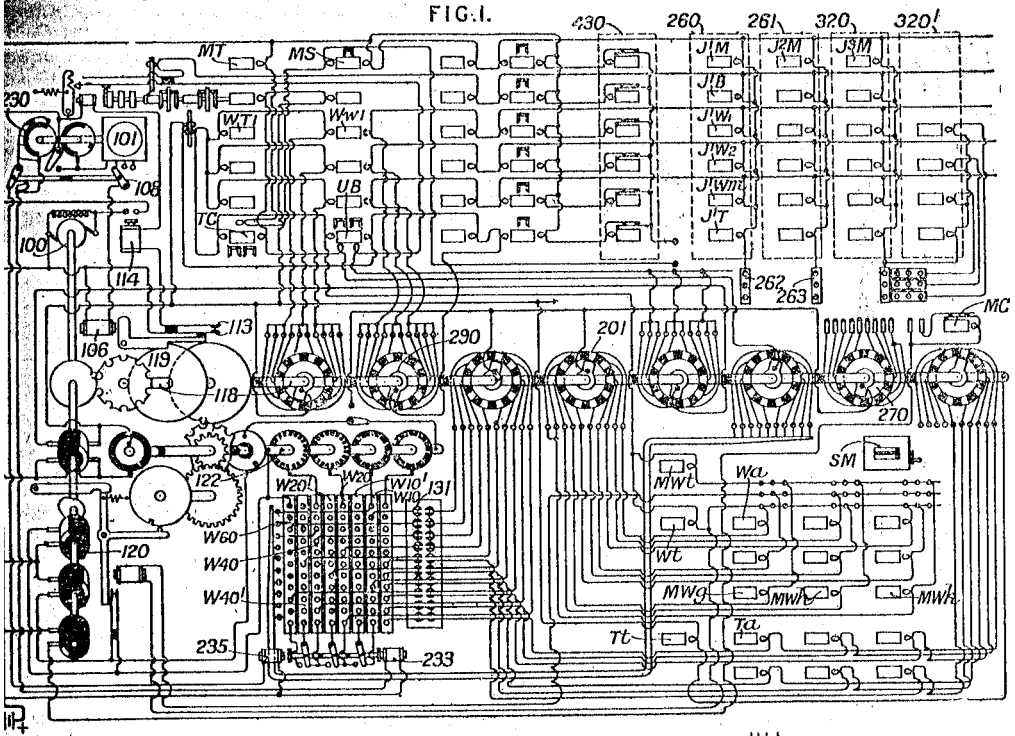

FIG. 8.

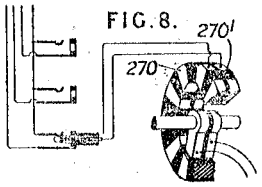

oted at 16, 17 in a fixed U-shaped yoke 14 d carries a pivoted actuating-pawl 19 driving, en lifted, a receiving-wheel 18 in gear with units pinion 41 of the numeral-wheels, ich rotate upon a spindle 31 and have linary transfer mechanism 37, 40. The vement is arrested by a stop 26, and the en-ged lower tooth 28 of the pawl prevents over-row. Upon the return stroke, the actuating-wl passes idly over the teeth. Six of these nters are mounted together in a 'bank' ovided with apertures (not shown) for cards ting the assignment of each counter, and en in position for actuation a cam 50 is rned by means of a screwdriver and depresses spring plate 52 so that locking-notches 54 ereon are removed from engagement with the units-pinions. In some of these counters o coils are provided through which at times ual currents pass in opposite directions and utralize each other, and in others mechanical icyclic gearing is employed for registering the fference or the sum of two series of actuations.

Zeroizing-mechanism.—To zeroize a register by mplete reversal of the train it is inserted with units pinion engaging a pinion 81, Fig. 6, iven by an actuating-mechanism similar to at described above, the electro-magnet of hich receives a rapid series of actuations and is in circuit a contact 83, 84 which is opened when a spring 85 drops into a notch 43 on the highest numeral-wheel 42 upon reduction of the registration to 999 &c.

Statistical machines.—Time and cost, computing. The circuit of a main driving motor 100, Fig. 1, is closed each minute by a clock 101, the contacts of which are in the circuit of a pilot magnet 106, closing contacts 113 for a motor-switch magnet 114 and thereby starting the motor. Through Geneva gearing, a reduced movement is given to a selector commutator shaft 118, a cam 119 upon which maintains the motor switch magnet contacts 113 closed until a single rotation has been completed. This action is repeated each minute. To each man is assigned a time register T*a*, receiving uniform time actuations, and a wage register W*a* actuated by time derived impulses according to a selected rate. A main impulse commutator 120 upon the motor shaft sends ten impulses per minute to a rotating shaft 122 having commutators adapted to send 60, 40, 20, and 10 impulses per hour respectively to wage-rate

Dickinson H & M 12088/12088A /1905 Adders

12,088. Dickinson, H., and **Dickinson, M.** June 9.

Calculating - apparatus; counting - apparatus.— Adding-machines, comprising a series of counting-wheels, mounted in a casing with numbered slots through which the wheels are directly actuated, are provided with printing-mechanism for recording the individual items upon a strip. The apparatus as described is adapted for dealing with money, but it may be adapted for weights or other quantities or simple numbers. The teeth of a set of wheels r, mounted on a shaft s, project through slots in the casing and are operated directly by the finger. These teeth engage slots in number wheels u, which show the total through apertures v. The wheels r also gear with wheels x, connected with type-wheels x^0, which, on the depression of a lever y as the finger reaches the end of its downward movement, print each item on a strip x^4 passing over an impression roller x^5. The type-wheels are carried by arms x^1, pivoted at x^2 and having an extension y^3, which bears against a pin y^2 on the lever y. A slot y^5 allows a spring y^4 to carry the type-wheels into contact with the strip when the key is depressed at the end of a stroke. The subsequent depression of another lever z swings the impression roller, which is carried by arms x^6, away from the type-wheels, and raises the end of a spring-controlled detent lever. The type-wheel thus released is returned to zero by a coiled spring in conjunction with a stop pin z^8. At the same time, the spring-pressed point of a pin z^5 is brought in front of the edge of the extension y^3, so that on the return of the lever z the type-wheels are brought again into gear with the wheels r. The recording-strip is fed by ratchet mechanism at the same instant. The transferring-mechanism consists of a spring-pressed pawl w with an inclined lug w^3 engaged by a pin w^2 on one wheel, which presses the bevelled end of the pawl against a tooth of the other wheel, the movement of the latter being completed by a spring lever w^4. The type-wheels may also bear corresponding numbers to appear through apertures in the casing to serve as a check. According to the Provisional Specification, the operating-wheels may be shaped at the periphery to accommodate the tip of the finger, or a thimble suitably formed at the ends to engage the projecting teeth may be used. Additional type-wheels, constantly in gear with or forming part of the operating-wheels, may be provided for printing the total. Adding devices of flat or other form without printing-mechanism are also described. The adding-wheels in these devices may be mounted on separate axes or on a common horizontal or vertical axis; when mounted on a vertical axis, the wheels are succesively smaller in size from the lowest upwards. Additional pound wheels may be geared to the first pound wheel, either as operating-wheels or as registering-wheels only.

FIG. 1.

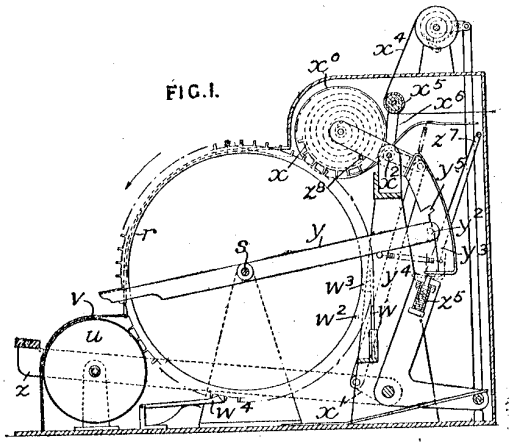

12,088A. Dickinson, H., and **Dickinson, M.** Dec. 11.

Calculating-apparatus; counting-apparatus. — In apparatus in which a series of concentric toothed counting-rings are arranged in one plane within a casing with slots through which the wheels are operated, the rings are mounted in and guided by grooved pillars e. The apparatus shown is adapted for adding together sums of money, but the invention is applicable to apparatus for dealing with weights or other quantities or simple numbers. The outer and middle rings b, c are numbered in three sections for halfpence and shillings, respectively, the zero positions being left blank, while the inner ring d is marked in pounds up to 50. The numbers are visible through apertures in the cover, and the projecting teeth through correspondingly numbered slots. The rings are operated by inserting a style between the teeth at the required number and moving it to the end of the slot. To facilitate zeroizing, certain teeth are distinctly marked and are brought to the ends of the slots. The transferring-mechanism comprises three pins k on each of the outer and middle rings, and pawls j pivoted to the casing having lugs l to be engaged by the pins and thus actuate spring-controlled levers h with spring pawls n. To prevent overdriving, the springs n engage with stops n^1 to which detent pawls o are fixed. An additional wheel g numbered in multiples of 50 may be added. The transferring-mechanism for this wheel consists of a spring-controlled pawl p, pivoted on the ring d, and adapted to be engaged by a stop p^1 fixed on the casing as shown in Fig. 6; a spring g^3 prevents overdriving. An alternative arrangement for preventing overdriving consists of a spring q, Fig. 7, fixed to the casing and having a projection q^1 to be engaged by a pin q^2 on the transferring-ring, forcing it into the path of the other teeth just as their proper movement is completed.

(*For Figures see next page.*)

12,088A.

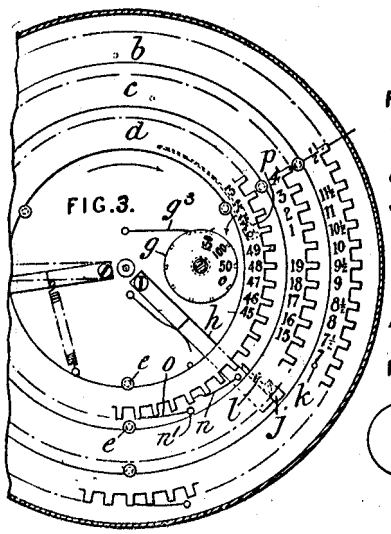

Diestelhorst T 19180/1912 Stats Punch card

19,180. Diestelhorst, [*née* Wenzel], '
Aug. 21.

Statistical machines; with printing-mecha ism; printing totals. — Cards perforated represent values of cheques, postal orde receipts, &c. are fed singly and automatical into a machine, and are engaged or penetrat by feeling-rods which control the setting type and rack bars. The values are print on a strip, and at any time the total can al be recorded on the strip. The cards are place on edge on a plate 21 and pressed towards plate 18 by weights 19, cords, and pulley When a crank handle on a shaft 2 is turne a bridge-piece 14 having teeth protrudin through slots in the plate 18 is lowered an feeds one card into position opposite a numbe of spring-pressed feeling-rods 100 which ar mounted in a frame 96 reciprocated by a ca 88 and lever 91. The ends of the rods passin through the perforations in the cards serv as stops to a number of rack-bars 103, whic are lowered by the rotation of the cams fixed on a shaft 6 and normally supporting th bars by means of the frame 23. Type bar 106 hinged to the rack-bars are thus se opposite a printing-strip passing over a rolle 113, and this roller and its supporting-fram 111[a] hinged at 110 are then rocked to tak the impression. The racks on the bars 10 engage gear-wheels connected by ratche mechanism with printing-wheels 44 which tota the values. The total can be printed on th strip at any time by operating a handle 12 which lowers the frame 111[a] and presses th roller 113 against the wheels 44. These wheel can be zeroized by rotating the shaft 49 which is grooved so as to pick up pawls on the print ing wheels. At the end of the operation of the machine, a shoe 99 previously supporting the card is withdrawn and the card falls into a box 131. The inking-ribbon 68 for the



types on the wheel 44, and the bars 106, passes from a spool around rollers 78, 77, and 76 to a winding-on spool, which is rotated at each

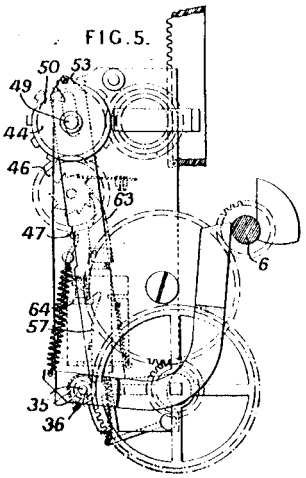

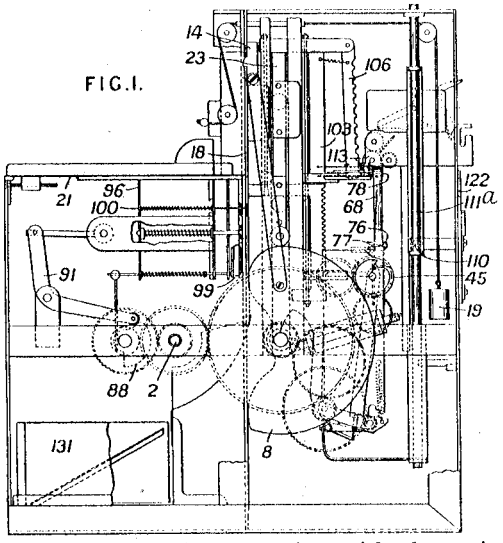

total-printing wheel to the next, a tappet 47, Fig. 5, on a gear-wheel 46 gearing with the lower wheel operates a trip lever 64, which thereupon releases a spring-controlled bar 57 carrying a pawl 63, which thus slips back over a ratchet-wheel appertaining to the higher wheel. The transfer takes place when the bar 57 is raised by the action of one of a series of tappets 36 on a shaft 35 positioned and rotated by connexion with the main shaft of the machine. The transfer bars are prevented from falling, should any of the levers 64 be released during zeroizing, by a cross-bar which is raised during the zeroizing rotation of the shaft 49 by means of pins 53. These pins rest normally in recesses in disks 50 fixed on the shaft, but when this is turned the pins ride on the circumferences of the disks.

types on the wheel 44, and the bars 106, passes from a spool around rollers 78, 77, and 76 to a winding-on spool, which is rotated at each

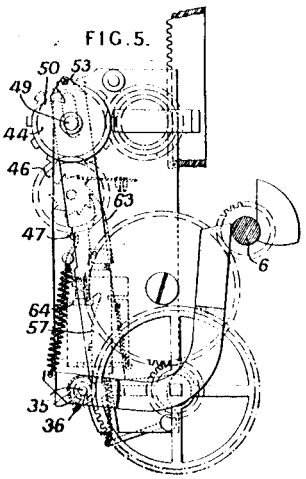

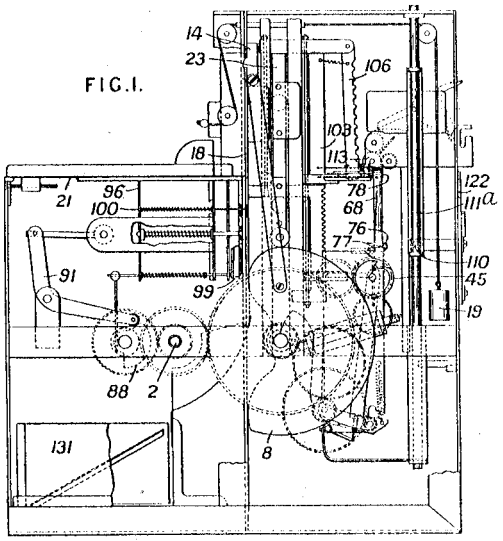

total-printing wheel to the next, a tappet 47, Fig. 5, on a gear-wheel 46 gearing with the lower wheel operates a trip lever 64, which thereupon releases a spring-controlled bar 57 carrying a pawl 63, which thus slips back over a ratchet-wheel appertaining to the higher wheel. The transfer takes place when the bar 57 is raised by the action of one of a series of tappets 36 on a shaft 35 positioned and rotated by connexion with the main shaft of the machine. The transfer bars are prevented from falling, should any of the levers 64 be released during zeroizing, by a cross-bar which is raised during the zeroizing rotation of the shaft 49 by means of pins 53. These pins rest normally in recesses in disks 50 fixed on the shaft, but when this is turned the pins ride on the circumferences of the disks.

Dodson A F 112719 of 1917 Tab calc on sheet for prices

112,719. Dodson, A. F. May 19, 1917.

Tabular calculators for the cost of goods in which the values of different quantities are tabulated at varying prices on a sheet or roll adapted to be moved by a setting-member in front of a scale of prices. The movement of the setting-member is controlled by a series of stops mounted on a differentially-set controlling-device. The sheet bearing the tabulated results is drawn from a cylinder 15, Fig. 5, pivoted at 16 and containing a spiral re-setting spring, on to a roll 24 by a wheel 35 formed with crown ratchet teeth 37 and with spur teeth to engage a wheel 34 on the shaft of the roll 24. The ratchet teeth 37 are adapted to be engaged by a pawl 38 on a hand-reciprocated slide 40, a detent 43 being provided to prevent backward movement under the influence of the resetting spring. Limitation of the movement of the slide 40 is effected by a series of stops 47, Fig. 2, formed in a block 46 carried by a frame 51 capable of movement in a guide 49 against a spring 50. The stops 47, in the example described, are four in number corresponding to a quarter, half, three-quarters, and a unit. Differential movement to position the stops is imparted

56

to the frame by knobs 54 engaging pins on the frame and moving in slots 56 of different lengths. In operation, if the value of several units and a fraction be required, the frame 51 is moved by sliding the knob 54c corresponding to the unit to the end of its slot, the member 40 is reciprocated the number of times required, the knob 54c is released, the knob 54 corresponding to the fraction is moved, and the member 40 is depressed again. The price of the commodity may then be read against the price graduation on the scale 13, Fig. 1. To re-set the sheet 58, the shaft 27 of the roll 24 is lifted in its slotted bearing by a bell-crank lever 29 thereby disengaging the wheels 34, 35 and allowing th re-setting spring to return the sheet to zero.

FIG.5.

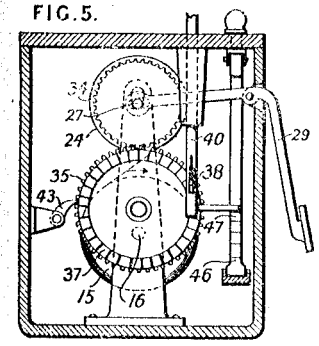

FIG.1.

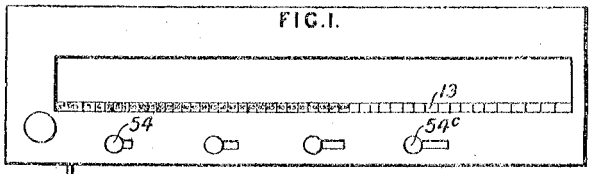

FIG.2.

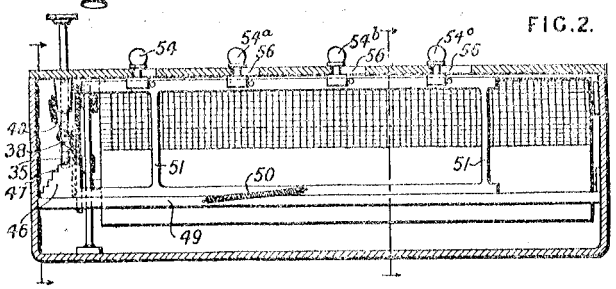

Dohm W 5142/1900 Sections of Beams

5142. Dohm, W. March 17.

Calculating-apparatus.—The apparatus is for calculating the section of beams, girders, columns, and the like under given conditions, and consists of a semicircle *a* and base *b*, forming one frame, at the centre of which is pivoted a radius arm *d*. Along the base slides the T head of a rule *g*, used for indicating purposes, and this and the radius arm may be clamped in any required position by screws. The Specification describes the arrangement of scales for I-beams, and gives various examples of their use. Other scales are provided which may be used in substitution or addition.

FIG. I.

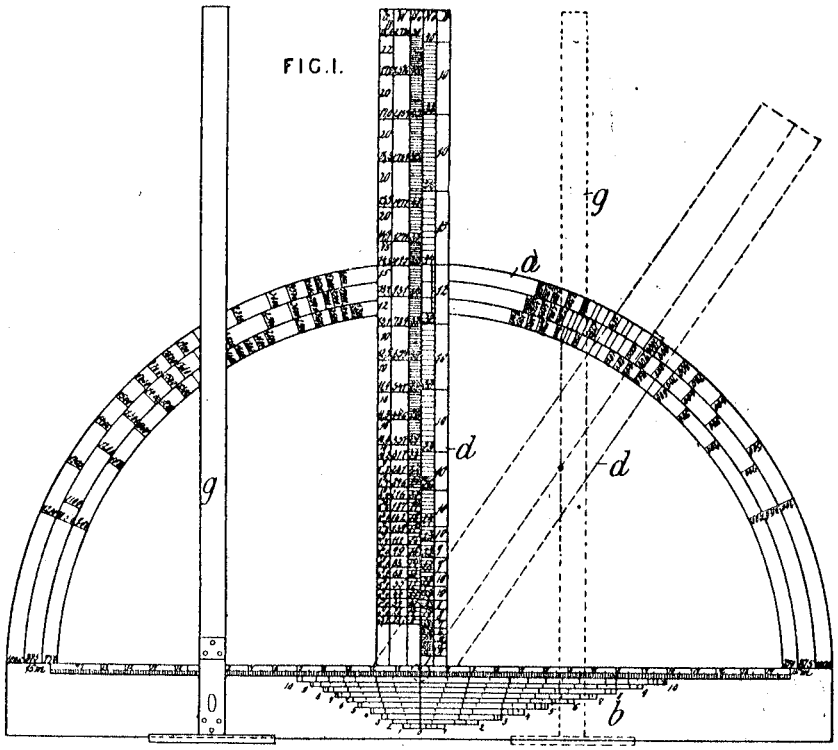

Donlevy J P L 9725/1903 Adder

9725. Donlevy, J. P. L. April 29.

FIG. 2.

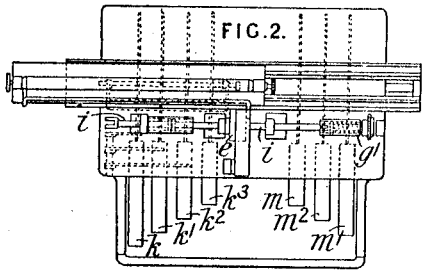

FIG. 7.

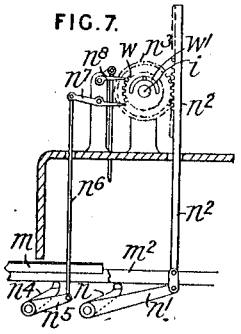

Calculating-apparatus; dials.—Relates to calculating-machines, recording-instruments, and the like, in which the letters, numerals, or other characters are brought to the required positions by the operation of a small number of finger-keys. The keys are arranged in positions corresponding with the fingers, for operation without moving the wrists. Fig. 2 shows a plan and Fig. 7 a sectional elevation of a type-writer, in which the types are on a wheel *e* on the shaft *i*. Three keys *m*, *m*¹, *m*² are shown for rotating the shaft *i* and wheel *e*, three keys *k*, *k*¹, *k*² for moving the shaft *i* longitudinally, and one key *k*³ for operating the impression mechanism only. The keys *k*, *k*¹, *k*² all act to operate the impression mechanism as well as to move the shaft *i*. The key *m*² operates a lever *n*, *n*¹ and rack *n*² to rotate a wheel *n*³ loose on the shaft *i*. Each of the keys *m*, *m*¹ operates a lever *n*⁴, *n*⁵ connected by a rod *n*⁶ to a pawl *n*⁷, adapted to engage a pinion *w* on the shaft *i* to rotate the wheel *e* one step. The keys *m*, *m*¹ move the wheel in opposite directions. The wheel *n*³ is provided with a pin projecting into a slot *w*¹ in the wheel *w*, and, when the key *m*² is depressed, it turns the wheel *w* and type-wheel through a considerable distance, say five steps. The type-wheel may be thus turned through one step in either direction by the keys *m*, *m*¹, and, if the key *m*² be depressed and then the key *m* or *m*¹, the wheel is moved four or six steps from its zero position. Two other keys operating similarly to the keys *m*, *m*¹ may be provided to move the wheel two steps in opposite directions. The keys *k*, *k*¹, *k*² operate a lever to move the shaft *i* longitudinally, against the pressure of the spring *g*¹, to bring different circumferential rows of characters into position. The keys *k*, *k*¹, *k*², *k*³ operate the impression hammer by which the paper is pressed against the type-wheel; they also operate the ink ribbon and space the paper carriage. The paper carriage runs on guides and is moved for spacing by a screw engaging split nuts. The split nuts may be moved out of engagement with the screw for the return of the carriage. The ink ribbon passes around the type-wheel on guide-rollers, and is fed by gearing connecting it to the feed-screw of the carriage. In recording and calculating machines, the keys *k*, *k*¹, *k*² may be arranged to lift shutters and expose characters brought into position, under the shutters, by the operation of the keys *m*, *m*¹, *m*² which rotate the type-wheel.

Doscher T 12314/1907 Abacus

12,314. Döscher, T. May 28.

Calculating-apparatus.—A slate, pen box, &c. is provided with an abacus which can be folded down so that there are no projecting parts. The slate frame 2, Fig. 1, is recessed to receive the abacus 3 in which are wires 5, and tubular pieces 7 between every five balls. A flange 8 upon each wire co-operates with a spiral spring 9 to enable the wire to be removed. When folded down in the frame 2, the abacus is held by a sliding bolt, press-button, &c. A pen box, Fig. 4, is fitted with an abacus in the same manner, the box being provided with a

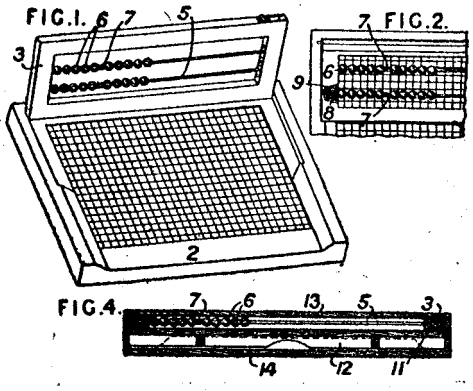

bottom 11, intermediate rim 12, and double sliding covers 13, 14.

Douglas & Appleyard 134558 of 1916 Range finder

34,558. Douglas, H. P., and **Appleyard, R.** Dec. 11, 1916.

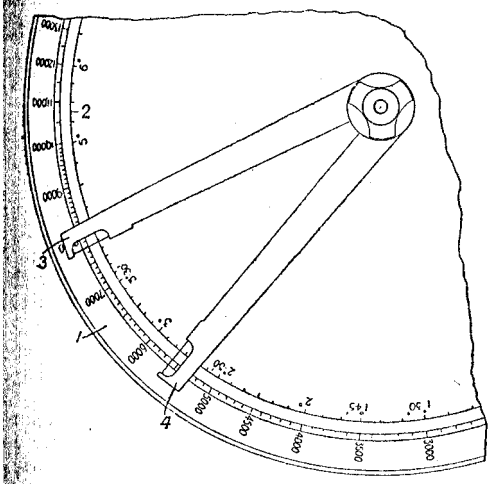

Logarithmic calculators.—Consists in apparatus for use in range-finding, for determining one side of a triangle when two angles and a side are known, comprising two logarithmic scales, one for distances and one for angles, connected by the formula $\log \frac{a}{b} = \log. \frac{\sin A}{\sin B}$, and two adjustable pointers, cursors, or the like for referring the settings from one scale to the other. The apparatus shown comprises two concentric scales 1, 2 of distances and angles respectively, and two radial arms 3, 4 capable of independent adjustment and also adapted to be clamped together and rotated as a single unit. In use, the arms are set to the angles A and B on the inner scale and clamped together; one arm is then set to the known side on the scale of distances, and the desired range is read at the other arm.

Drake W A 25180/1898 Tab calc

25,180. Drake, W. A. Nov. 29.

Calculating-apparatus.—The apparatus, of which several modifications are described, is constructed on the principle of the ready reckoner, and is suitable for the solution of problems involving percentages, such as the determination of the total amount and separate items of taxes, the calculation of interest, &c. In the form shown in Fig. 1, the amounts to be taxed are set off in a column round a cylinder 15 from, say, 100,000 to 999,000 dollars (the thousands only changing) and in parallel columns the "equalized value," the separate items, and the total amount. Pointers 21 on an adjustable bar 20 mark the position of the decimal point. By two operations it is thus possible to determine the taxes on any sum from 1 to 999,999 dollars. For example, suppose the amount were 675,921. The cylinder is turned by the milled head 23 until the number 675,000 appears under the word "Assessed" in the sight opening 19. The items are then noted from the other columns. The cylinder is next turned to show 921,000, and the decimal bar 20 is shifted to read 921·000. The other columns then show the items, and the pointers 21 the corresponding position of the decimal point. Finally, the two readings from each column are added together. The addition may be avoided by calculating the columns of items at the

given percentage, *plus* the percentage of equalization. Figs. 10 and 12 show a form of apparatus for calculating interest at a fixed rate for a number of days, months, or years. A number of cylinders 53 are mounted in a hollow cylinder 48, and can be rotated simultaneously by gear 54, 55, to bring any principal and its interest for the various periods opposite slits in the outer cylinder. Again the outer

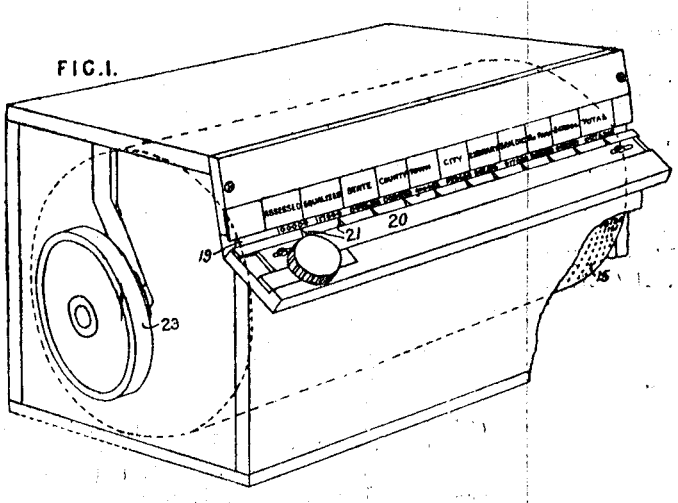

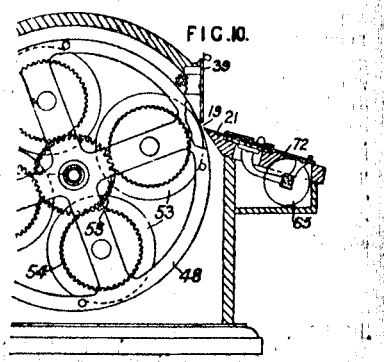

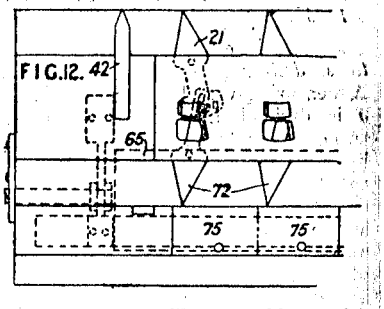

cylinder 48 can be turned to bring any cylinder 53 opposite the sight aperture 19. Shutters 39, one for each period of time, cover the sight apertures. All the decimal pointers 21, except the first 42, are marked with time periods, say, 1 to 30 days, and they can be swung on their pivots to expose concealed ciphers and so, by altering their position, multiply the results by 10 or 100. Thus, if it is desired to determine the interest on a certain principal for 7 days, the principal is brought to the sight aperture, the decimal pointer 42 adjusted, and the shutter opposite the pointer marked 7 is raised. By turning the pointer on its pivot to expose one or two ciphers, the position of the decimal point is altered to multiply the amount by 10 or 100, giving the interest for 70 and 700 days. An auxiliary cylinder 65 is provided for the units and tens of large numbers. It slides into the pointers 21, and has pointers 72 of its own connected by pins and slots with the others. Shutters 75 cover the sight aperture of the auxiliary cylinder, and are moved to expose the results as required.

Draper & Robertson 14364/1904 Multiply weights & values

14,364. Draper, C. W., and **Robertson, W. H.** June 25, A.D. 1903, [*date applied for under Patents Act, A.D. 1901*].

Calculating-apparatus; receipts, checking and recording.—Computing-machines, specially applicable for use in stores &c., for ascertaining and displaying the result of multiplying weights and values together, are provided with two or more character-plates arranged over each other, and movable relatively to bring characters thereon into position to be displayed, and a number of perforated slides crossing each other and movable

relatively to expose characters on the plates. Each character-plate 61 is movable to two or more positions, and the slides 30, 31 are arranged in two sets crossing each other between the character-plates and the face-plates 29. The machine shown in Figs. 1 and 3 is provided with a cash drawer.

FIG.1.

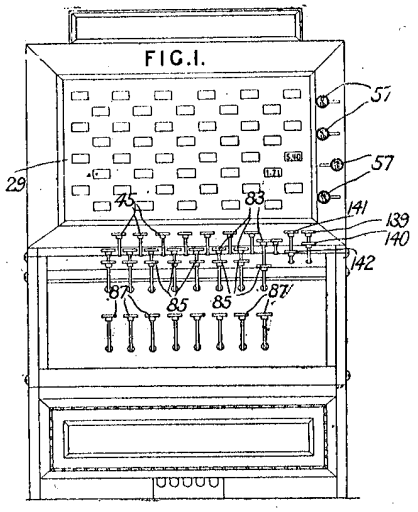

FIG.3.

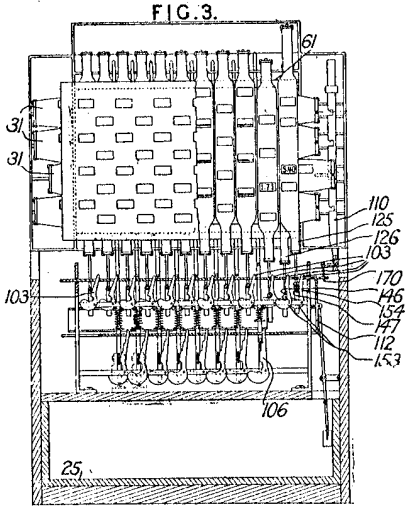

Fig. 4 shows one of the character-plates 61, one of the vertical slides 30, and the key-operating mechanism. The slides are preferably made of aluminium and the character-plates of cardboard. In the normal position, all the character-plate openings register with the openings in the face-plates. There are three numbers to each opening, one above and two below. The ten slides 30 are actuated by the ten keys 45, while each horizontal slide 31 is operated by a key 57, and the character-plates are movable vertically into one of three different positions by means of one of the three keys 83, 85, 87. To prevent the springs provided from returning the slides and plates immediately to their normal position, catch mechanisms are provided. The vertical slides are held by the dogs 103, the character-plates by the dogs 106, and the horizontal slides by the vertically-movable bar 110. To release the catch-dogs, the horizontally-reciprocating frame 112 is provided, and upon movement of this frame to the left the bell crank 170 moves the bar 110 to release any operated slide 31. A release movement is imparted to the frame 112 upon the closing of the cash drawer 25, by the means shown in Fig. 12,

FIG.12.

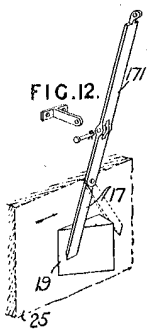

FIG.4.

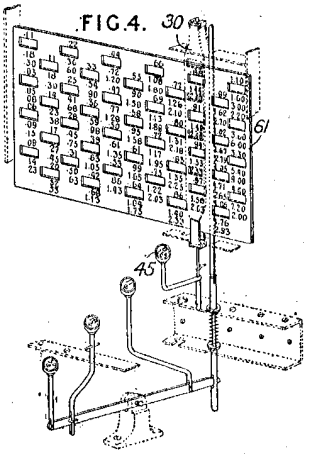

consisting of the lever 171 with its lower pivoted portion 17, and the drawer block 19. Additional mechanism co-operates with the character-plates to display the cost of ten, twenty, thirty, or forty pounds at from four to thirty cents per pound, and consists of double vertical slides 125, 126 with modified openings. The slide 125 is movable downward to two positions by the keys 139, 140, while the slide 126 is movable likewise by the keys 141, 142. Dogs 153, 154 are provided for the key-levers 146, 147, and the movement of the frame 112 acts to disengage the dogs. In a modified construction of machine, the number of pounds and price per pound are displayed at the rear, or purchasers' side, of the machine, the difference lying in the numbering on the rear sides of the character-plates, in the construction and arrangement of the rear sides of the double vertical and horizontal slides, and in the manner in which the rear face-plate is perforated. The computing-mechanism may be attached to a cash register or analogous machine.

© B O B Williams Printed22/11/2023 CalcPatents Ed. 1.doc

Drennan J 28452/1907 Stepped drum adder

28,452. Drennan, J. Dec. 27.

Calculating - apparatus; receipts, checking and recording; counting-apparatus. — In a calculating-machine, the differential operation of the counting-apparatus corresponding to the particular key depressed is brought about by the employment of a stepped hollow drum, the steps of which are adapted to engage the depressed keys. Reference is made to the provision of means for retaining and releasing depressed keys, for releasing those wrongly depressed, and when the mechanism is employed in a cash register, for setting the drum free to rotate by the opening of the cash-drawer. One of the keys A is provided for each unit of each denomination, and when the apparatus is used for calculating in any monetary system, similar units, tens, &c. banks of keys are employed for each monetary value. The required key A being depressed by means of the finger or by a lever, a handle J is operated, and a spring-controlled sector G rotates a drum C by means of a pinion F until the corresponding step on the drum engages the depressed key. The registering-wheels N, N^{I}, N^{II} are rotated to a corresponding extent through a free-wheel device M and suitable gearing. Transfer takes

Dreyfus & Levy 5779/1907 Disk adder

5779. Dreyfus, A. A. A., and **Levy, A. H. V.** March 11.

Calculating-apparatus; counting-apparatus. — A style-set disk adding-machine having a single disk is provided with means for indicating complete rotations. The base B, shown in section in Fig. 2, has a raised periphery on which numbers from 0 to 99 are marked, and the centrally pivoted disk E bears similar numbers each with its corresponding notch, as shown in Fig. 1. A radial bridge-piece M arrests the style and carries the aperture P for reading results, and is also slotted to receive an indicator O engaging with a spiral groove upon the pivoted disk, whereby one complete rotation of the disk causes the index to move through one division of the scale upon the bridge. A cardboard disk may separate the pivoted disk from the base; the base may be corrugated for strength and may have a carrying-ring S.

FIG. 1.

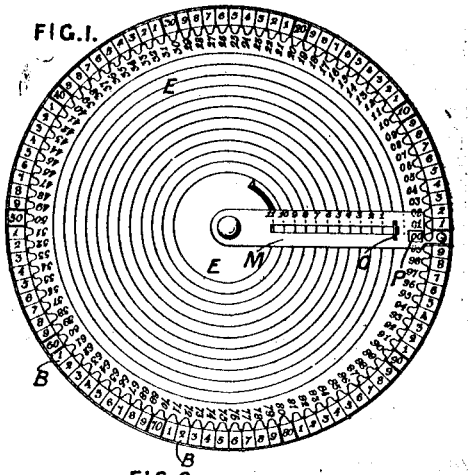

FIG. 2.

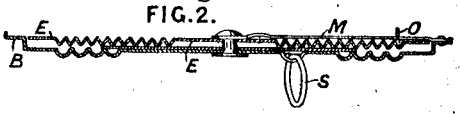

Dreyfus & Levy 621/1909 Adder £sd

A.D. 1909.

621. Dreyfus, A. A. A., and **Levy, A. H. V.** Jan. 11.

Adding and subtracting apparatus for monetary values.—Relates to disk machines for adding or subtracting a series of numbers or money values. The base-plate 1 is dish-shaped and has a series of numbers 1–100 arranged round its raised edge, corresponding with a similar series on the movable disk 3, which is notched to enable a stylus to rotate it. Pivoted upon the disk 3, and adapted to rotate with it, is an arm 12 having at its outer end a star-wheel 15 engaging one of the circular series of holes 11 in the disk 3. Upon a complete rotation of the disk, this wheel engages a plate 7 fixed to the base-plate 1, and is rotated to enter the next hole 11 so that its pointer 17 is directed to the next number of the series, thereby indicating hundreds. When adding money values, a machine of similar construction but graduated for pence, shillings, and pounds is employed, in conjunction with a machine as described above for the higher orders of pounds.

FIG. 2.

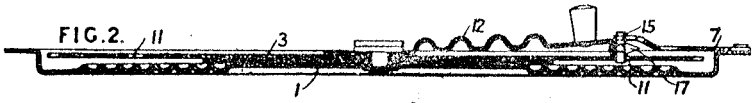

FIG. 1.

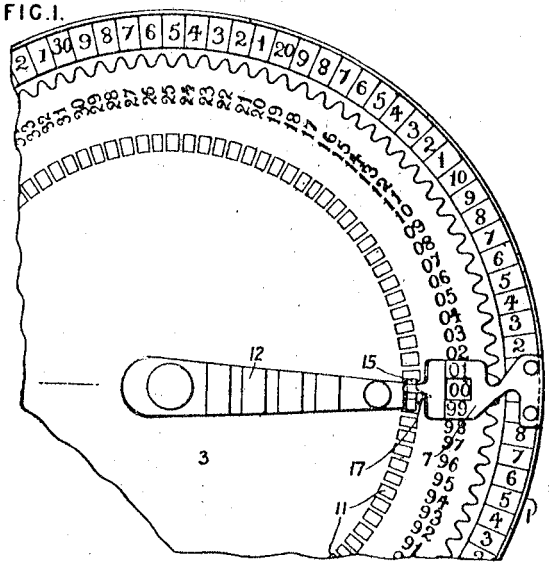

Picture and instructions courtesy Colin Labouchere



© B O

but in this case take the *lowest* figure in the bottom number. Set the machine, insert the peg opposite the notch of **23** on the outside circle, turn to the right as far as it will go—repeat this a second time. You will then have **46** in the little square; the **2** being in the tens column, put down **460**. Take the next highest number, which is **5**, and turn as before. There is a difference of **3** between **2** and **5**, you therefore turn three times from **23**—this will give **115**. The next higher number being **7**, turn the disc twice more from **23** and you will have **161**, add **00** as the **7** is in the hundreds column—**16100**. To this add the other two results, thus:

16100
460
115
16675

A few minutes' practice renders both these methods extremely easy.

DIVISION.

This is done by continued subtraction.

Example **2380 : 85**

Machine to be put at **238**. The **2** shown by the indicator and the **38** in the little square. From this subtract **85** (as already described) as many times as possible, which, in this case, is twice; write down **2** and the little square will show **68**; to this add the unit **0 = 680**, to which number the machine has to be set. Again subtract **85** as often as possible, which will be **8** times, write down **8**—total **28**, which is the correct answer.

The "ADAL" Calculator can be obtained from:

The ADAL CO.,

Manufacturers of the

"ADAL" CALCULATOR,

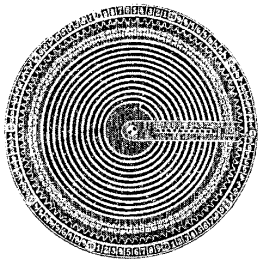

Temple Courts,
TEMPLE ROW, **BIRMINGHAM,**
England.



The ADAL Calculator.

THE BRAIN-SAVER.

This remarkable little machine, which will save its cost to yo in the very first week of its use, is worked in the easiest possibl manner.

YOU MUST FOLLOW THESE SIMPLE DIRECTIONS.

Insert your left thumb in the ring at the back and steady th calculator with your fingers.

The machine is set, when the figures **00** show in the square and the indicator is pushed to the extreme right.

To set the machine, take the enclosed peg, insert it in the note at the white dot, and run round the disc from right to left till th **00** shows in the square. Slightly raise the indicator and shift i to the extreme right of the sliding bar.

Now for ADDITION—

You can add pence, shillings, and pounds as per the following example:

£3265	14	11
8536	19	9
527004	19	11
70359	10	7
251475	12	2
£860642	17	4

First take the pence; and, the machine being set as describec begin to add by inserting the peg in the notch beside the figure on the outside plate and draw the **2** into the square. Take th next numbers in rotation—**7**, **11**, **9** and **11** and when you hav drawn these to the square it will mark **40**. Forty pence are thre and fourpence. Put down the four, carry forward the three shilling by moving the disc until it shows **03** in the little square, shift th indicator again to the extreme right and start off with the shilling column.

Your square stands at **03**, insert the peg in the **12**, **10**, **19**, **1** and **14** and in a moment you will have arrived at the shilling total—**77**; put down **17** and carry forward £**3** by moving the inne disc until it shows **03** in the little square. Shift the indicate again to the right, and begin to add up the pounds. In doing thi

Drha F 11194/1889 tab calc for interest

11,194. Drha, F. July 11. *Drawings to Specification.*

Calculating-apparatus.—The device is intended for calculating interest, and consists of a series of concentric circles, the inner ones graduated for interest and the outer ones for capital. Over the circles works a radial arm graduated in periods of time corresponding to the inner circles, and rates of interest corresponding to the outer circles. By setting the index with the proper rate of interest opposite the required capital, the interest for any time marked on the index may be read off from the interest circles. The table may be set out on a cylinder, sphere, or cone arranged to revolve beneath a fixed index.

Dring & Fage 25466/1912 Slide rule for timber

25,466. Jones, E., [*trading as* Dring & Fage], and **Weale, J. A.** Nov. 6.

FIG. 1.

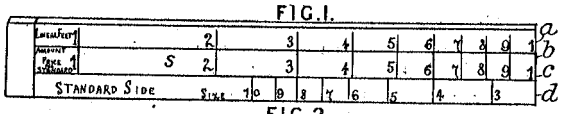

FIG. 2.

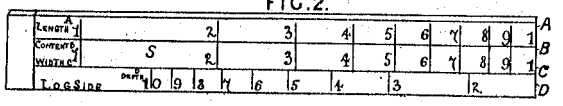

Slide-rules.—Relates to a logarithmic rule for calculating cubic contents of timber and for making computations of price according to the St. Petersburg standard. Fig. 1 shows a portion of one side of the rule, with a double-radius scale *a* for linear feet, and an inverted line *d* for size. Upon the corresponding side of the slide S is a double-radius scale *b*, *c* for amount or for price per standard. The reverse of the rule bears a double-radius scale A, Fig. 2, for length, and an inverted line D for depth. Upon the slide is a double-radius scale B, C for contents and width.

Dring & Fage 25467/1912 Tab calc for timber

25,467. Jones, E., [*trading as* Dring & Fage], and **Weale, J. A.** Nov. 6.

Tabular calculators. — A measure specially adapted for use with Hoppus' tables for ascertaining the cross-section and content of timber consists of a rule 36 inches long, every length

421

of 10 inches of which is divided into 11·30973 parts or units. The units are thus each equal to ·884 inch approximately. The 'quarter girt' string is applied to the measure and its length in units read off; this quantity is then sought for in the tables, and the cross-section and content of the timber ascertained.

Duchamp P 2436/1877 Add Subtract card scorer

2436. Lake, W. R., [*Duchamp, P.*]. June 22.

[4*d.*]

[*Provisional protection only.*]

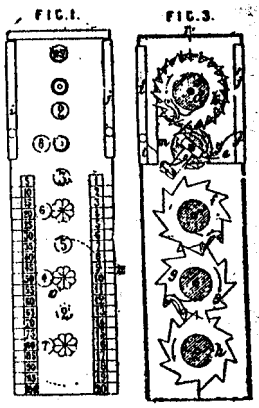

Calculating-apparatus for marking the points made in playing cards, billiards, &c., and adding and subtracting money, lengths of cloth, &c. The unit disc *e* is actuated by the cord *y*, Fig. 3, and the slide *j*, which is set to the required number on the scale 12, Fig. 1, and brought back to unity by a spiral spring. *d* is the tenths disc, (actuated by the ratchet *k*, cord *m*, and slide *i*), which moves *e* through one-tenth of a revolution. *f* is the tens, *g* the hundreds, and *h* the thousands disc. An inner circle of figures on the discs *e*, *f*, *g*, *h* may be set to, and being reversed in direction will remain at, the amount in hand. The motion is transmitted intermittently from the unit disc *e* to the discs *f*, *g*, *h* by pawls and ratchets.

Abridged also in Class *Toys &c.*

Duckham Sir A M 110984 of 1916 Proportional calculator

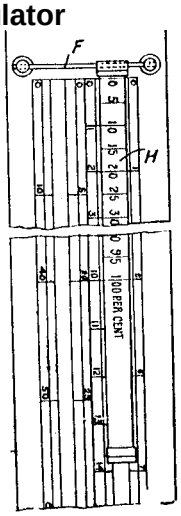

110,984. Duckham, Sir A. M. Dec. 18, 1916.

Proportional calculators of the kind in which an extensible member bearing graduations is mounted at the zero end of an evenly divided scale and adapted to be stretched alongside it. The single evenly divided scale is replaced by a number of scales having their zero marks in the same line and the extensible member H is mounted on a wire F so that it can be moved transversely across the scales.

Dudgeon H A 23858/1901 Irregular areas

23,858. Dudgeon, H. A. Nov. 25.

Calculating - apparatus.—Relates to apparatus for measuring the area of skins of leather and like articles of irregular figure. A row of hinged arms D^1, bearing back against stops D^3, holds a row of separate wheels E, arranged side by side almost in contact with a rotating roller B, and, as the leather passes between the roller and the wheels, cords E^2, wound up by the hubs of the wheels, draw weights E^3 with rollers up inclined arms E^5 which extend from a shaft C. The turning-movement of the weights about the shaft is balanced by a spring *h*, pulling a shorter arm at one end of the shaft, and an index is provided either by means of a pressure gauge 1 with a sensitive reservoir 4 under the short arm or by means of a rack-and-pinion attachment. A friction pawl P prevents the measuring-wheels from running back, until it is lifted by a handle O^2. Means are, however, provided to allow a return movement of each measuring-wheel equal to the amount of movement imparted to the rollers by the thickness of the substance measured. The number of revolutions a wheel may make is limited by a spiral groove *e* and an engaging-pin on an arm M^1.

FIG. 2.

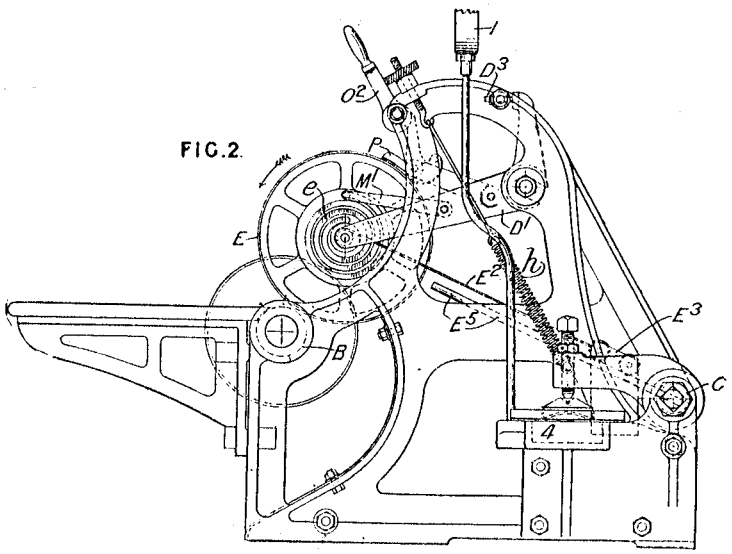

© B O B Williams Printed22/11/2023 CalcPatents Ed. 1.doc

Dudley G W 3702/1896 Adder typewriter

Dudley, G. W. Feb. 18.

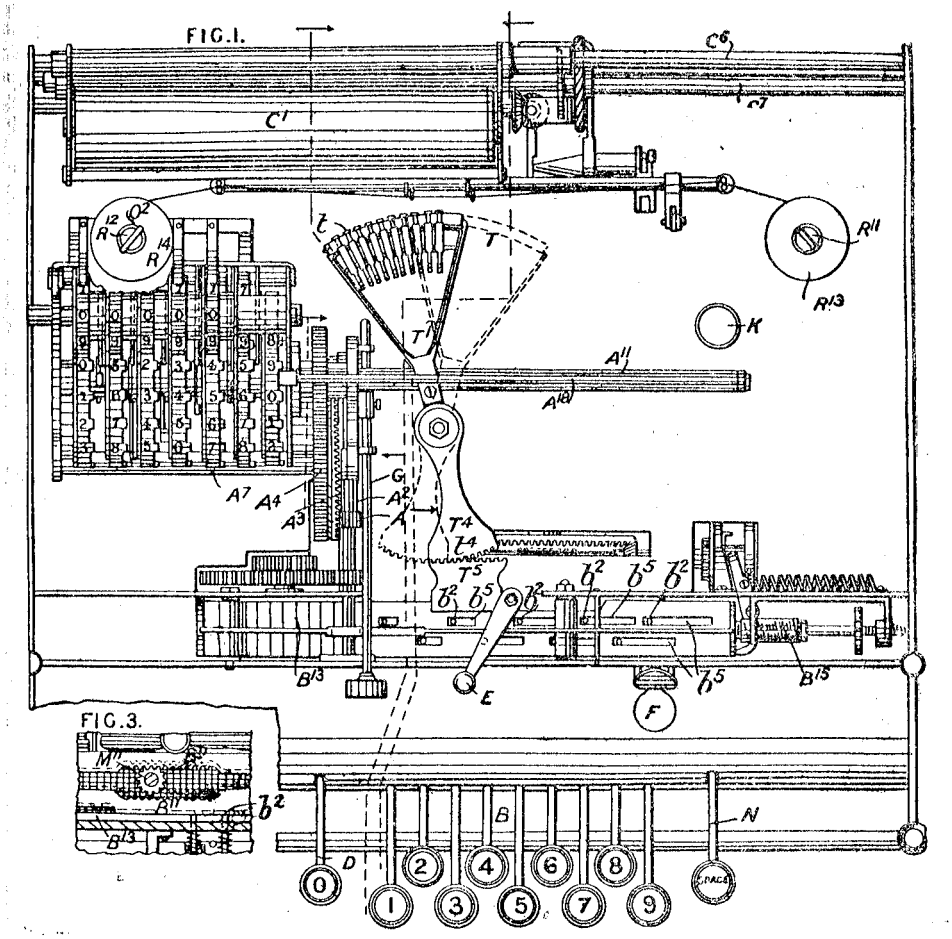

ulating-apparatus.—Relates to apparatus for performing addition or subtraction and for type-g the same. The throw of the adding-wheels and type levers is controlled by a sliding plate hich is slotted at b^5, b^5 for different lengths corresponding to the numbers on the actuating B. The movement of the plate is effected by a spring motor through a pinion M^{11}, Fig. 3, and ble rack B^{11}, the latter sliding with the plate but rising and falling in guides therein. On ng one of the keys B, a spring pin b^2 is thrown up into the corresponding slot, and the rack o bring its lower teeth into gear with the pinion and slide the plate to the left a distance rtional to the number on the key. On releasing the key the rack falls and the plate is returned. ljustable spring buffer B^{15} prevents shock and stops the parts in the correct positions. The nent of the motor is transferred, through a sleeve A^2 with a pinion A at each end, to the crown A^3 driving the adding-wheels A^7. According to which pinion is in gear the wheels are driven rd for addition or backward for subtraction. The required position is given by sliding the rod ; or in, and when printing only is to take place, a third position of the rod throws both pinions f gear, so that the wheels A^7 are not affected ; in the latter case they are locked by a detent

299

Following page of text in the patent omitted

See referenc e below

See Calculator attachment for typewriter 1896

The following article comes courtesy of Darryl Rehr, Editor of ETCetera. the journal for typewriter (and office) collectors in the United States!
© 1996 by the Early Typewriter Collectors Association. ETCetera #35 / June, 1996.
Illustration and text from "Scientific American" of **May 23, 1896**

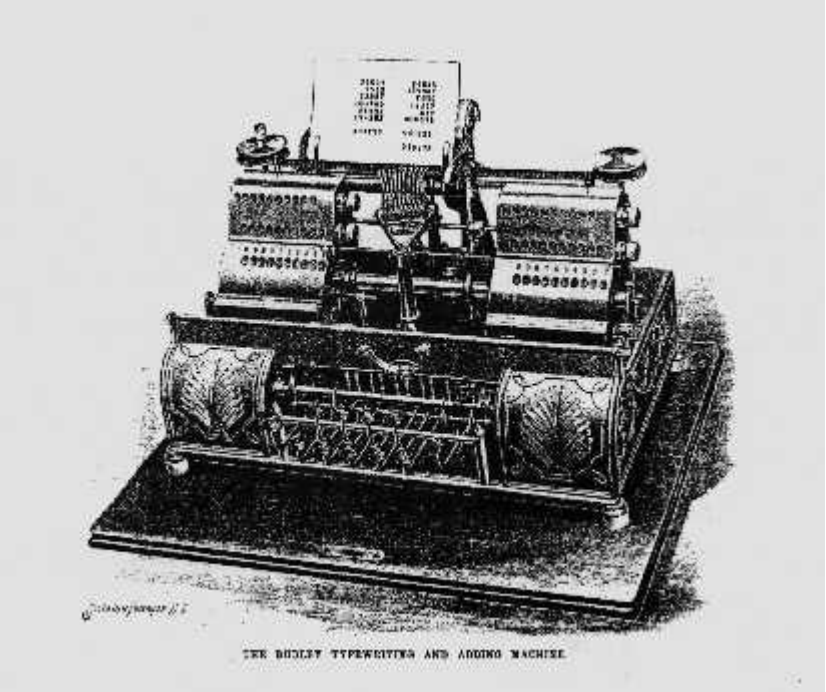

The accompanying illustration presents a machine intended to cover a substantially new field in typewriting and adding machines. It is the property of and is being manufactured by the Numerograph Manufacturing Company of Charleston, W. Va., under patents to George W. Dudley, No. 554,993 555,038 and 555,039 of February 18, 1896.

The object of the invention is to quickly and accurately add a column or columns of figures and, at the same time and by the same manipulation of the keys, to print upon a sheet of paper or a blank book these figures in the order in which they are added, so as to form a proof sheet which shall verify the correctness of the addition, and which machine, by special adjustments, may be made to print at the end of the column the sum total of the column, and to do the work in a vertically descending progression or vertically ascending progression or in a horizontal progression.

It verifies, by printing in full sight, each figure to be added at the same time the addition is made, and is so constructed that, if the proper key is struck, the result must be perfect. It works with the ease of a typewriter and its speed is only limited by the skill of the operator. It subtracts by reversing the machine as readily as it adds; in other words, the registering disks run one way as readily as the other. It carries automatically. The keys all work in the same horizontal plane and have for each figure the same dip or extent of depression. Its construction is simple, considering the variety and extent of work done, and its action in all its parts is positive. It is adapted to printing on pass books with the same facility as upon the ordinary platen and sheet. Additions can be made either to the right or to the left. It can be used to add without printing or to print without adding. Mistakes, if made, can be seen at once, and corrected as easily as mistakes upon the typewriter. The illustration represents a double machine, upon one side of which can be kept the debts and on the other the credits, and a balance can be struck by deducting the one from the other as shown in the example given.

Dufresne Z 21623/1893 Tab calc cylinders

21,623. Dufresne, Z. Nov. 13.

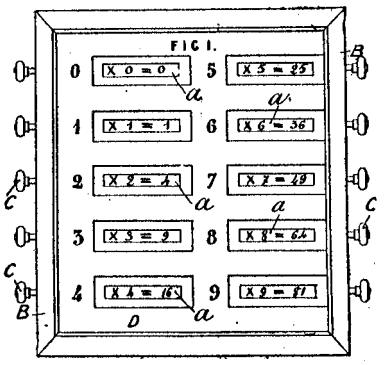

Calculating-apparatus.—The case B contains ten cylinders *a*, placed behind openings in the front D, and operated by means of knobs *c*. The cylinders *a* are each marked with signs and figures, as shown in the Figure, so that the results of multiplication can be exhibited. The apparatus may be made for use as a toy, or so as to be suitable as a calculator for office use.

Dumaresq J S 17719/1904 Gunnery device

17,719. Dumaresq, J. S. Aug. 15.

Calculating - apparatus.—An instrument for giving rapidly the rate of change of range and the deflection, to enable the line of sight of a gun or battery of guns to be kept in proper position, is shown in plan in Fig. 1 and in part sectional elevation in Fig. 2. A base plate or ring *a* carries a bar *c*, secured at its ends to pillars a^2 and kept parallel with the keel of the ship on which it is employed. The ring is graduated as shown, and has a projecting flange a^1 on which rests a graduated disc *o* which is rotated, by means of studs b^2, until a zero arrow on its surface points to the ship to be fired at. The disc *b* may be held down on the flange a^1 by plates b^1 provided at intervals. The rate of change of range (or the elevation), and the relative velocity in a direction at right-angles to the line joining the two ships (or the "deflection") are indicated on the graduated disc *b* by the pointed end of a model ship secured to a scale *f*. This scale is adjusted in a pivoted block *e* to the speed of the vessel fired at, and is placed parallel with its direction of motion. The block *e* is pivoted to a sliding block *d* which is adjusted to the speed of the vessel, on which the instrument is used, on a scale on the after end of the bar *c*. The base-ring *a* may have three points a^3 to rest on a table, a screw b^3 being used to fix the instrument on a turret or gun platform.

FIG. 1.

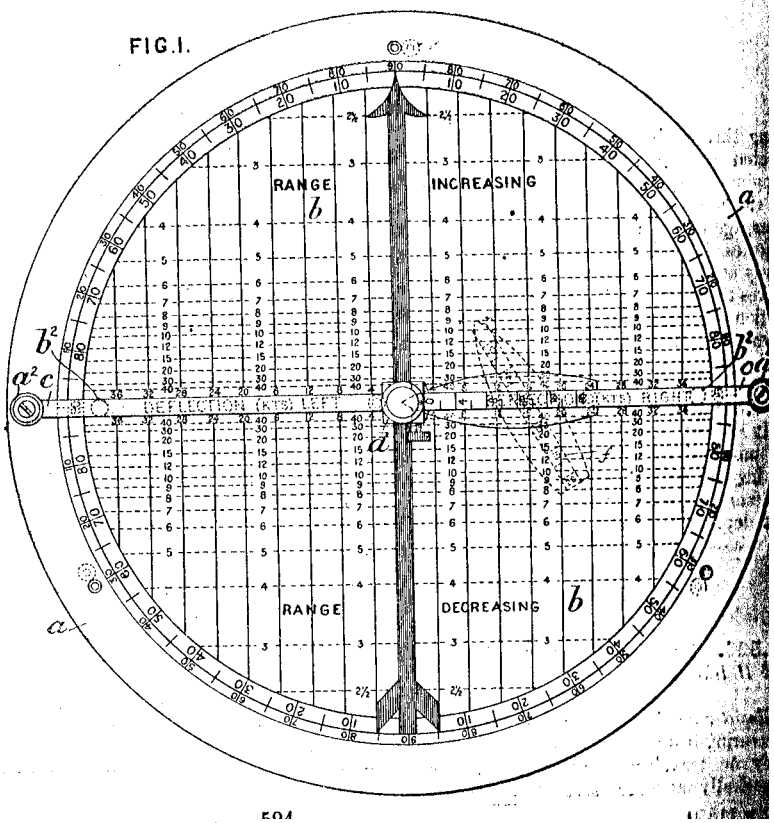

FIG. 2.

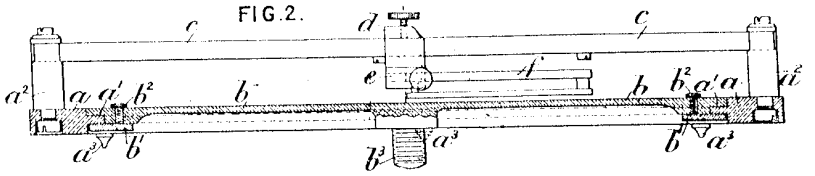

Duncan J E 1410/1898 Computing scale double cylinder

1410. Weighing-apparatus. DUNCAN, J. E., Centralia, Wisconsin, U.S.A. Jan. 18.

FIG.3.

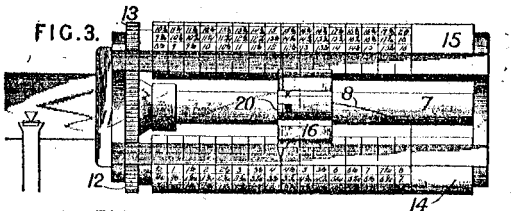

16 FIG.5.

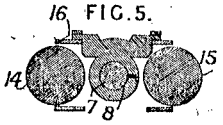

Price and value, indicating.—An apparatus for weighing and computing the value of a weighed article at different rates per unit of weight is shown in Fig. 3, and consists of a poise 20 mounted upon a cylinder 7 with a coarse-threaded screw 8, so that the movement of the poise causes its supporting-cylinder to turn and thereby rotate the computing-cylinders 14, 15 by a train of wheels 11, 12, 13. The computing-cylinders are so arranged that the weight and value can be read off directly, and in the present instance the pointer 16 indicates a weight of two pounds, while the value for any given rate, say sevenpence per pound, is indicated by the numeral opposite the figure 7 on the weight scale; the value for any other rate can be read off by inspection. The poise is formed of two separable parts, one only of which need be used for weighing, and thereby giving a different and lower value to the figures on the weight scale. By the arrangement of double computing-cylinders, a greater range of prices is obtained with a given length than could be obtained with one cylinder only.

Dunham C M 8648/1888 Tab calc rolls

8648. Dunham, C. M. June 12.

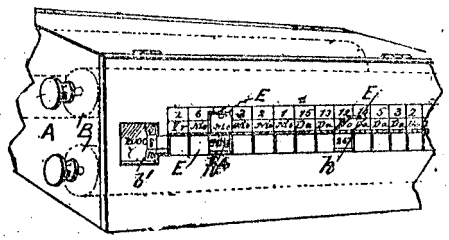

Calculating - apparatus.—Relates to an interest indicator. Sheets on rollers B in a case A are printed to read in order from left to right, principals, rate of interest, and corresponding amounts for different periods of months or days.

The principal and rate are read through an aperture b^1 in the case, and the amounts through apertures *k* are covered by flaps E, over which the periods are marked.

Dunlop H C 23886/1901 Slide rule design

23,886. Dunlop, H. C. Nov. 25.

Slide-rules.—To reduce friction, the ordinary tongue-and-groove slide is replaced by silk strands *a*, upon which the slide C runs. Fixed metal springs may be fitted for the same purpose.

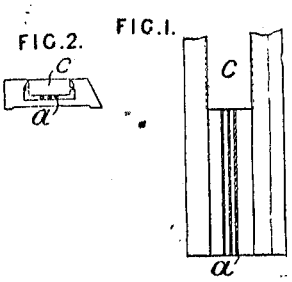

Dunlop R 124/1862 Tab calc

124. Dunlop, R. Jan. 17. [*Provisional protection only.*]

Calculating-apparatus.—A collection of leaves of paper or parchment is made into a book serving as a kind of ready-reckoner, each leaf of which is divided into a number of sections by cutting or separating them in such manner that the leaves range one above the other or otherwise range together as required. The book may be used for money calculations and for other tables such as weights and measures &c.

Dunn & Harrison 9118/1899 Computing scale

9118. Weighing-apparatus. DUNN, W.R., and HARRISON, L., both of Alton, Indiana, U.S.A. May 1.

Value - indicating apparatus.—Relates to price and weight computing apparatus, shown in elevation in Fig. 1. The platform 8 is mounted on the frame and supported by the beams 11, which are connected with the vertical rods 20. The horizontal scale beam 37 is rigidly attached to the rods, the fulcrum 38 being movable along the beam. The beam 23 is mounted on the frame; it is pivoted to the rod 20, and carries the counterbalancing and tare movable weights 29 and 30. The price beam 32 is

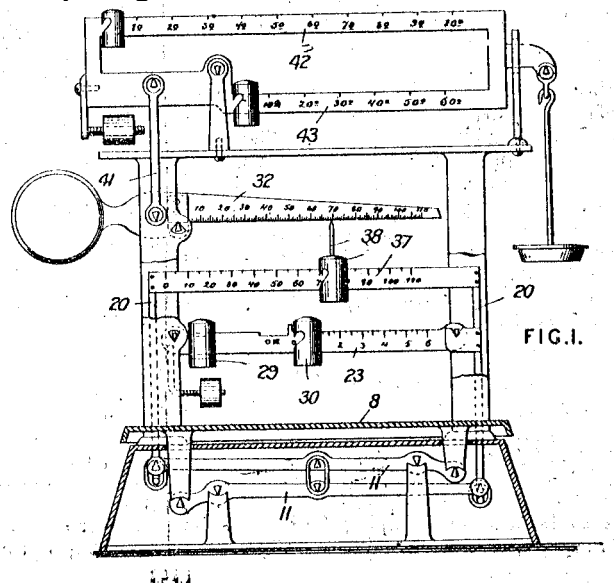

FIG.1.

Duplex Adding Machine Co 23890/1907 Adder Printer

23,890. Thompson, W. P., [*Duplex Adding Machine Co.*]. Oct. 29.

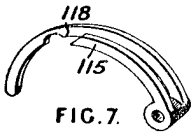

FIG. 7.

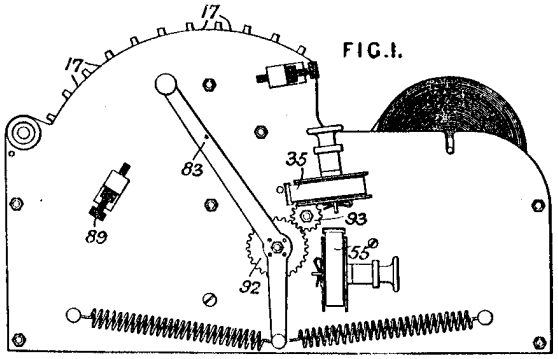

FIG. 1.

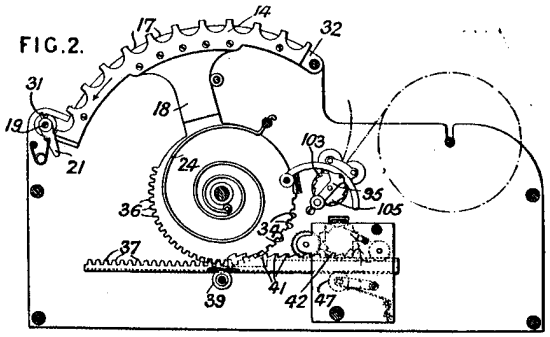

FIG. 2.

! *Calculating-apparatus.*—In multiple-bank sector-set lever-operated adding-machines, the items and totals are printed only, without indication. The operator places his finger in the selected depression 17 of the finger-piece 14 for each denomination and draws it down to the cross-bar 18; the sectors are divided by strips 32, and have a metal frame to which india-rubber finger parts are fixed. Spring pawls 21 arrest the sectors in set position, and may be disengaged for re-setting by manual rotation of the shaft 19 upon which they are fast; alternatively, there may be multiple pawls for each sector to prevent any backward movement thereof due to inexact setting. The setting action, which takes place against restoring springs 24, one for each sector, positions the item types 34, and by the toothed segment 36 actuates the racks 37 for the receiving-wheels 42 of the totalizing-counter. Those racks are provided with grooves into which the supporting and guiding rollers 39 take, and they rest at their rear end upon spring rollers 47, whereby upon their forward or re-setting movement the actuating-teeth 41 may come out of engagement with the teeth of the receiving-wheels. To print a set item or a total, the printing-lever 83 is operated to move the cylindrical platen 103 and effect the line-spacing for the paper. For this purpose the platen with its guiding-rolls is carried on pivoted slide arms 95 adapted to be rotated by the gearing 92, 93, and as this is done the ratchet-wheel 105 engages the pawl 115, Fig. 7, extending from a fixed pivot, and line-spaces the paper; an additional arm, with a recess 118, engages a pin upon the platen frame to control the extent of feed, the pawl being thrown out of gear whenever the pin leaves the recess. The handle, as shown in Fig. 1, is provided with a double spring-control, and may be operated in either direction within the limits of adjustable stops 89. The forward movement prints an item from the item types 34, the rearward movement a total from the types borne by the adding-wheels. Manually or automatically operated inking-ribbons 35, 55 are provided. The framework is so constructed that the totalizing-counter may be removed without displacing the other parts.

Durand A N 3175/1880 ASMD

3175. Durand, A. N. Aug. 3.

[*Provisional protection only.*]

Calculating-machine and teaching-appliance for adding, subtracting, multiplying, and dividing. A number of barrels loose on an axle are twice numbered in reverse order from 1 to 9. One series serves for addition and multiplication, and the other for subtraction and division, the series required being exhibited through openings controlled by a slide. The barrels carry wheels which gear with others turning loosely on fixed axles and having attached to them, by springs, ratchets operated by pins on the preceding barrel to partially carry forward the tens. The operation is completed by cams or tappets actuated by the gearing. The machine is driven by a shaft on which are keyed a crank plate and nine wheels, the latter carrying from one to nine teeth. In front of these are grooves on which runs a carriage carrying a wheel which can

1

be brought into gear with any of the nine wheels. It is moved by gearing and arrested in front of the required wheel by a detent actuated by a key. There are nine keys. In front of the movable gear wheel and engaging with it is a long pinion with which gears a movable one which can be placed opposite either of the barrel wheels by a knob furnished with an index outside the case. The movable gear-wheel slides on a square bar the rotation of which can be communicated to the units wheel. The barrels are brought to zero by pinions on a shaft turned by a button. These pinions act on part of the width of the barrel wheels, and of these some teeth are cut away so that they shall not pass the zero. The pinions are also notched at one part to allow the barrel teeth to pass when in use. To add say 7 to 5, the machine being at zero, the movable pinion is placed opposite the units barrel, the key numbered 5 pressed and the crank plate turned. The movable wheel is moved opposite the 5 toothed crank-shaft wheel and the barrel turned 5 units ; the key 7 is then pressed and the operation repeated, when 2 will appear on the units and 1 on the tens wheel. To subtract, the barrels are set to the larger number and by similar action other numbers deducted. For multiplying, the multiplicand is brought to the openings, its corresponding key pressed, and the crank turned the number of times indicated by the multiplier. To divide, a partial dividend is formed commencing from the left ; this is subtracted as many times as possible from the preceding by entering in the quotient the number of subtractions.

Abridged also in Class *Writing-instruments &c.*

Duschanek K 3828/1883 Calculating apparatus

3828. Lake, W. R., [*Duschanek, K.*]. Aug. 4.

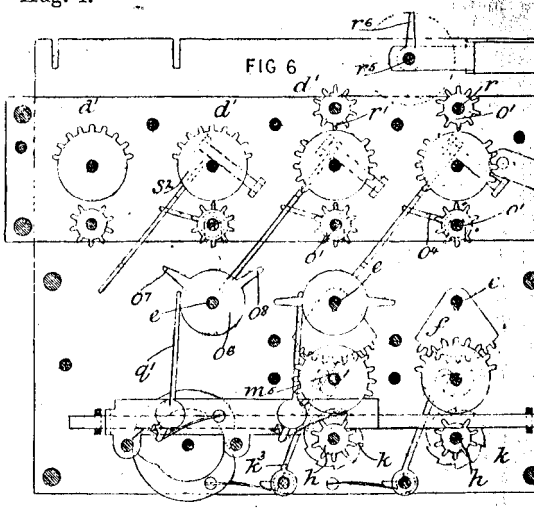

Calculating-apparatus.—The vertical shafts *e*, *e* carry toothed sectors *f* with nine teeth of gradually-increasing vertical length. The sectors are adjustable vertically by rotating the shafts *h* which gear with bevel-wheels and a rack and are also provided with ratchet-wheels *k*, *k* held in position by pawls. Discs with numbers 1 to 0 are mounted on the shafts *h* under apertures in the top plate, through which the numbers are run to indicate the number of teeth on the sector which will engage with the teeth of a corresponding wheel o^1. The number to be added or multiplied is made to appear on the dials corresponding to the sectors *f* (two only being shown in Fig. 6), and then by revolving the shafts *e* the required number of times the result appears on dials corresponding to the wheels o^1. The wheels o^1 with their spindles and dials are carried by a frame d^1 and can be shifted one or more points to the left or right when required to multiply or divide by tens. The intercalation of the tens in products is provided for by pins o^4 which, at every revolution of the shafts *o*, raise levers whereby drums o^6, provided with two arms o^7, o^8 are raised, and one or other of the arms gears with the corresponding toothed wheel of the next cipher disc and advances or moves it back one tooth. A lever q^1 pressed by a spring maintains the drum in a raised position until the intercalation is completed. The number of revolutions made by the operating crank handle to bring the units, tens, or other numbers in position are shown by dials on the shafts *r*. The pin r^6, on the shaft r^5 which is in gear with the crank handle, at each revolution moves one of the wheels r^1 one tooth. The discs on the shafts *o* are set at zero by rotating a crank, and thereby the partially-toothed wheels s^2, which gear with wheels having one of ten teeth missing. The discs corresponding to the shafts *r* are also set to zero by the same means. The toothed sectors *f* are made to drop to zero by cams m^5 which release the pawls k^3.

Eagles J 3937/1895 Helical Slide Rule.

3937. Eagles, J. Feb. 23.

Slide rules.— The logarithmic scale *a* is marked helically around a cylinder *b*, the scale of equal parts being formed by the line *h–h* cutting the lines of the helix and its subdivisions by a scale *c*. Over the cylinder *b* slides a transparent cylinder *d* with index marks *e*, *k* on which may, if desired, be marked subdivision scales *s*, *t* instead of *c*. On the cylinder *d* slides the transparent collar *g* with index *f*.

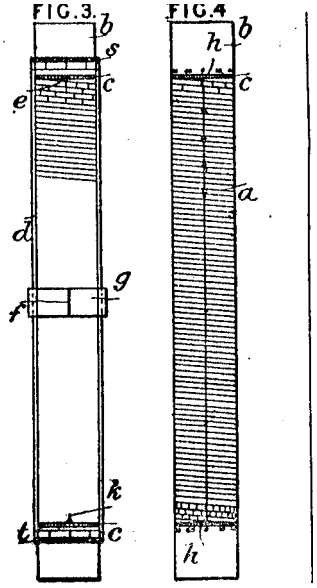

21

Eastwood W 120980 of 1917 Slide rule pedometer volumeter barometer

120,980. Eastwood, W. Nov. 29, 1917.

FIG.1.

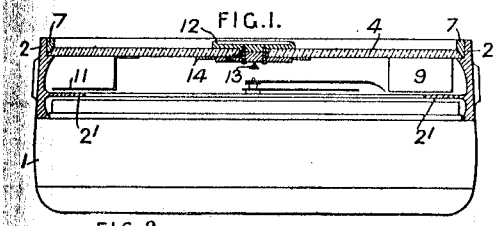

FIG.2.

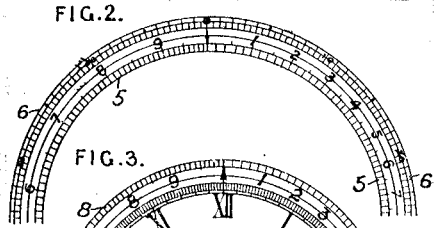

FIG.3.

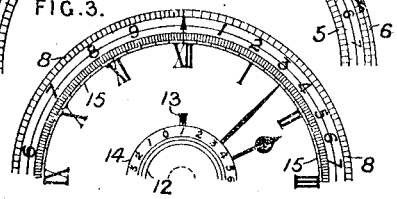

Slide-rules.—A circular logarithmic slide-rule is combined with a watch, pedometer, volumeter, aneroid barometer, or other portable instrument. In Figs. 1, 2, and 3, the watch case 1 is shown provided with a revoluble bezel 2 in which a glass 4 is revolubly carried and retained by a split-ring 7. A shelf 2¹ on the bezel carries a logarithmic scale 5 and an equally divided scale 6. The glass 4 carries a lens 9 marked with a radial cursor-line, and a wire pointer 11 or flat piece of glass with a second cursor line. A revoluble button 12 carries a finger 13 which protrudes beyond a digit scale 14 attached to the glass 4, which scale is used to determine the decimal point. Instead of fixing the lens 9 and pointer 11 to the glass 4, the finger 13 may be lengthened to carry them and the scale 14 dispensed with. Fig. 3 shows the dial which carries a logarithmic scale 8 and a minute scale 15, the minutes being divided into fifths. The scale 15 may be utilized instead of the scale 6, which is then dispensed with. Various modifications describe alternate methods of mounting the bezels, cursors, and scales, among which are adaptations to a watch of the "hunter" type or the back of an ordinary watch and to an aneroid barometer. When applied to the back of a watch or to a hunter watch, the lens 9 is carried by levers which fold within the

FIG.18.

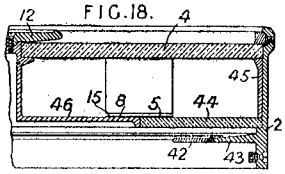

FIG.10.

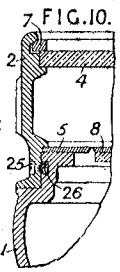

case. In one form of bezel mounting, Fig. 10, a split-ring 26 slidable in a groove in the case 1 can be tightened against the bezel by three screens 25. The split retaining-ring is formed with a bezel engaging a bevel in the bezel 2. In another form, the ring 26 fits partly into a groove in the case and a groove in the bezel, and is forced by screws wholly into the groove in the case when it is desired to remove the bevel. The application to a barometer is shown in Fig. 18. The usual barometer scales 42, 43 are carried by a revoluble bezel 2 and are viewed through an annular glass 44 retained by a ring 45 which supports the glass 4, in turn retained by a split-ring 7. The logarithmic scale 5 is carried by the glass 44, while logarithmic and equally divided scales 8, 15 are carried by a rotatable disk 46 moved by the button 12.

Eberhardt H 3363/1904 Adder printer

3363. Eberhardt, H. Feb. 10.

Calculating-apparatus.—A machine is shown by means of which numbers can be added together in the order in which they are spoken or expressed, from left to right, and at the same time printed on a strip. The keys *r*, with their types *p*, are mounted on sector-shaped pieces *o*, in such a way that any particular key upon any one of the sectors may be pulled forward, so as to project

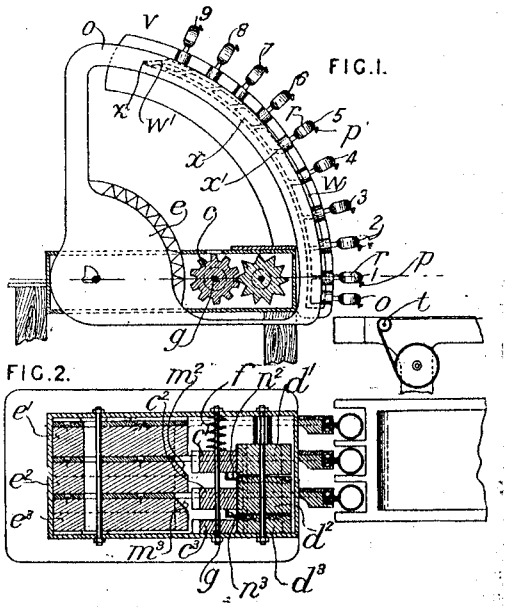

slightly beyond the others, as shown at 2, and at the same time, the sector, guided by the pin *z* sliding in the groove w^1 in the fixed plate *v*, carries the toothed segment *e* into engagement with the numbered wheel *c*. During the downward stroke, the pin *z* slides in the groove *w*, and at the end of the stroke the type prints the number on the band of paper *t*. On the return movement, the sector is pushed inwards so as to disengage the toothed segment *e* from the wheel *c*, the pin *z* passing through one of the horizontal grooves x^1, and along the groove *x*. The number wheels c^1, c^2 are capable of sliding along the shaft *g*, under the action of the bevel surfaces m^2, m^3 of the segments e^2, e^3, and the spring *f*, so that when the segment e^2 is operated to engage with the tens wheel c^2, the unit wheel c^1 is displaced so that the pin n^2 is out of engagement with the carrying-over wheel d^1. Similarly, when the segment e^3 is operated, both wheels c^1, c^2 are displaced.

Eberhardt H 10264/1904 Adder addiator type

10,264. Eberhardt, H. May 4.

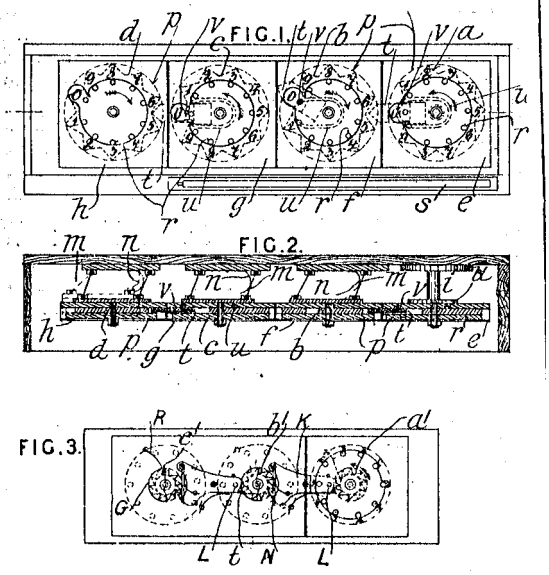

Calculating-apparatus.—An adding-machine has one wheel for each column of figures. In one arrangement, Figs. 1 and 2, the counting-wheels *a*, *b*, *c*, *d* are mounted in boxes *e*, *f*, *g*, *h* open on adjacent sides, the box *e* being fixed to a pillar *i*, whereas the other boxes are supported by pieces *m* pivoted to the boxes and to the case, and are retained in position normally by springs *n*. Discs *p* fixed to the wheels have the numerals marked on them in positions corresponding to the teeth of the wheel, and also to the holes *r* arranged circularly on the discs. Each wheel, except that at the left-hand end, carries a tooth *t* sliding in a groove and having a pin *v* which works in an elliptical groove *u* in the bottom of the box, so that, when the wheel is revolved, the tooth moves inwards and outwards so as to turn the next wheel the space of one tooth in each revolution. The top of each box is provided with a nearly circular aperture round which the numerals are marked on the box. The wheel *a* records units, the others tens, hundreds, and thousands. A stick *s* is inserted in the hole in the wheel opposite the required figure in the proper box, and the wheel is revolved till the stick meets the stop. This is done for each figure of the numbers to be added. The pressure on any one of the wheels *b*, *c*, *d* when the stick is inserted causes the box to be displaced, so that the wheel is only connected with that on the left-hand side. The sum of the numbers is read off from the figures appearing through the apertures in the boxes. In the form shown in Fig. 3, all the boxes are fixed, and the number discs have ratchet-wheels a^1, b^1, c^1 attached to them, and also discs G, each carrying a driver *t* which once in each revolution displaces a spring-lever K by means of a pin L. The lever moves the next ratchet-wheel, by means of a spring-pawl N, through the space of one tooth. A second spring-pawl R prevents reverse movement. In this case, all the wheels revolve in the same direction.

Eckelmann M 12084/1906 Disk adder

12,084. Eckelmann, M. May 23.

Calculating-apparatus ; counting-apparatus.—In an adding-machine a number of superposed disks of decreasing radii, each corresponding to one denomination, have ratchet teeth cut upon their edges for engagement by the actuating-pawls, which are all mounted upon a single setting and operating lever movable over graduated scales to give the differential actuation. The transfer mechanism is of the moving-pawl type, and stops on the framework are brought into the path of others on the disks for zeroizing. Each of the disks 3 . . . 6 is loosely pivoted centrally and bears numerals visible through windows 32, the adding-disks being separated by other fixed disks 11 which have gaps 46 along a radial line to allow the transfer pawl 44 of the lower outer adding-disk to be momentarily spring-pressed into gear with and advance the next higher disk by means of its ratchet teeth. The operating-lever 44 is loosely pivoted at the centre of the disks, and has index plates 42, 242, one of which is brought to the required numeral on one of the scales during the setting stroke and the lever then returned

FIG.I.

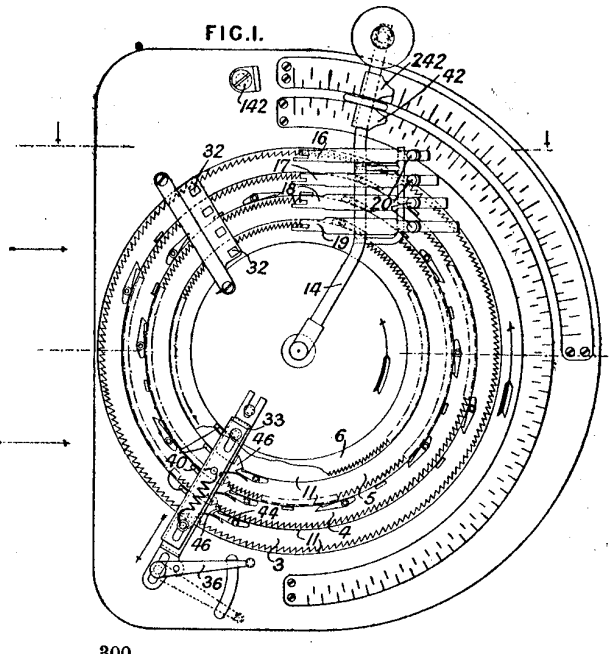

Eckelmann M 14250/1907 Disk adder

14,250. Eckelmann, M. June 20.

FIG.6.

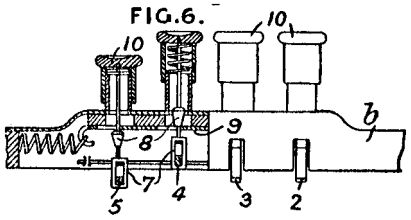

Calculating-apparatus; counting-apparatus.—In apparatus of the type described in Specification

No. 12,084, A.D. 1906, plunger keys with an interlocking slide are provided for (1) depressing and keeping down the actuating-pawl of any desired denomination, and also for releasing a depressed

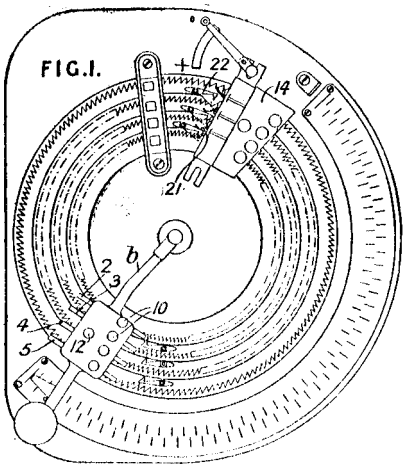

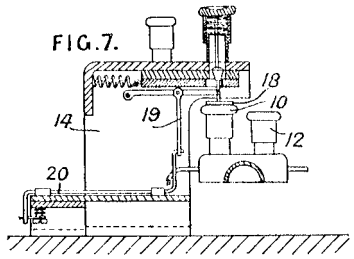

pawl ; and (2) displacing and thereby rendering ineffective the spring which ensures the engagement of the transfer pawl at the transfer point. (1) The actuating-pawls 2 . . . 5 upon the hand-lever *b* are depressed by the keys 10, Fig. 6, which have each a cone 8 whereby the slotted spring-held slide 9 is displaced during depression, and eventually snaps over the head of the cone and holds the key down. Depression of any other key or of a special release key 12 also moves the slide and restores any key already depressed. The pivoted actuating-pawls pass through stirrups upon the key stems. (2) A similar arrangement of plunger keys is mounted upon the bracket 14 which carries the springs 21 for pressing the travelling-pawls 22 into momentary engagement with the teeth of the higher wheel as they pass the transfer gaps, and these keys operate link-work 19, 20 adapted to displace the springs and prevent the occurrence of a transfer. These keys may also have plates 18 for depressing the corresponding keys upon the hand-lever.

Edmonds H H 12714/1905 Trig problems

12,714. Edmonds, H. H. June 20.

Calculating - apparatus. — By means of a plane surface and a movable radius bar, both provided with a number of scales of natural trigonometrical functions, various problems in plane and spherical trigonometry may be solved, the application to nautical astronomy being particularly described. The surface A is of metal or celluloid and rectangular form, with a square marked upon it and divided up by lines H, J which start from natural cosine graduations along the base and left side C, D, the vertical lines being produced to meet the upper edge E. With radius equal to the side of the square and centre at the lower left corner, an arc G is struck and graduated in time and arc. Other scales are: squares of numbers Q, cotangents E, tangents F, cosines, and tangents upon the sliding piece K, and sines N beneath it, a parallel fixed scale of tangents, and a uniform scale P of which the unit is conveniently 0·3056 inch to suit the ex-meridian problem. The radius R is of celluloid or other transparent material graduated upon its lower surface, and readings are taken along the median line. It has two centres S, T of motion and graduation, one or the other of which is placed over the peg M, and two handles V, and bears scales of sines, cosines, and versines. The accessories include a marker U for the radius, and three transparent plates X, Y, Z of use respectively as an intersection marker, a means for carrying on graduations from an edge, and a proportional-part instrument. Examples are given of the application to the following problems: azimuth at rising or greatest elongation, altitude azimuth, time azimuth, ex-meridian, hour angle at rising, hour angle from altitude.

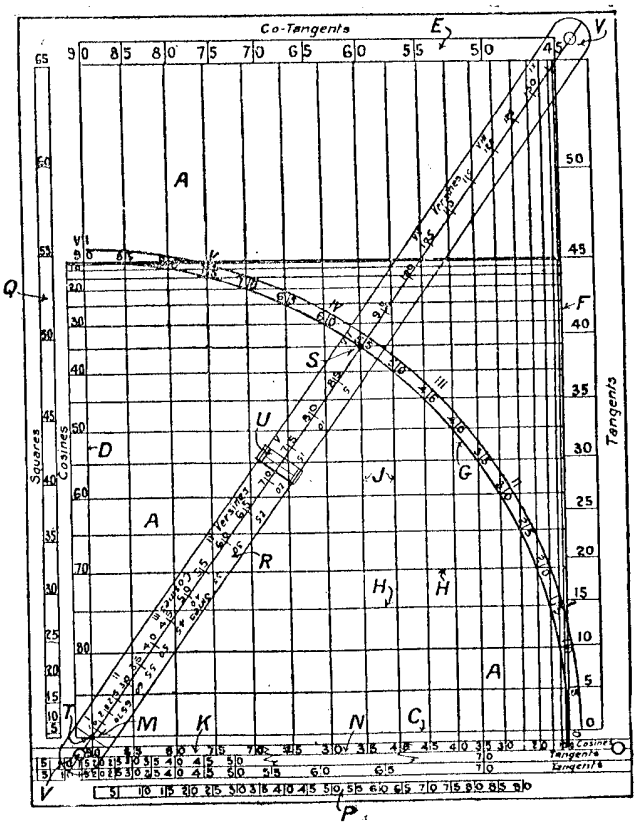

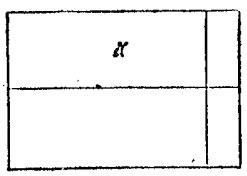

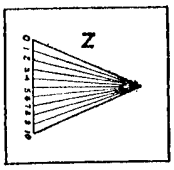

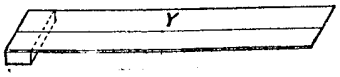

Edmondson J 16/1883 Calculating apparatus

A.D. 1883.

16. Edmondson, J. Jan 1.

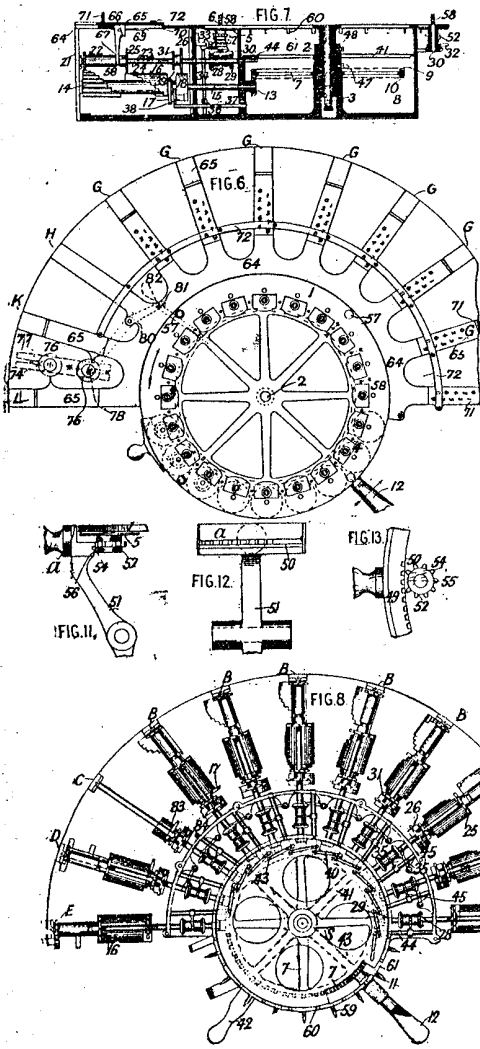

Calculating-apparatus.—A circular plate, free to revolve on a stud, has apertures through which numbers are seen. The said numbers are on discs mounted on spindles. The circular plate 1 revolves on a spindle 2 rotating in a boss 8 and resting on a footstep 3, Fig. 7. The figures on the discs 5, mounted on spindles 6, are seen through openings in the plate 1. Between the openings are holes for pins to mark the decimal point. A driving bevel-wheel 7 has teeth on its upper and under surfaces which gear with a pinion connected with the operating-handle 12 and the bevel pinions 13 operating the calculating-drivers 14; these have teeth which form steps, on which are respectively 0, 1, 2, 3, 4, 5, 6, 7, 8, 9 teeth. The drivers A and E are set to operate simultaneously the pinions gearing into them, and each of the remaining drivers is set to operate its pinion about one tooth later than the one to the right of it. The same remarks apply to the secondary carrying-teeth. On the shafts 15 of the stepped drivers 14 are their corresponding stepped stops 16. On each shaft 15 (except the first and eleventh) from right to left is a secondary carrying-tooth 17 and its stops 18 loose on the shaft. They have pins to clutch them to the stop 16. Each driver 14 actuates a pinion 21 on a keyed tube 22 sliding on a shaft 23. The tube carries a star-wheel 25 gearing with the stop 16 to lock its shaft 23 in position except when actuated by the driver 14 or tooth 17, or when locked by the star-wheel 26 working on the stop 18. There is also a period of the driver's revolution when the shaft 23 is locked by both the star-wheels. It carries bevel-wheels 28, 29 to drive through wheels 30 the discs 5. The wheels 28, 29 are loose on the shaft and are clutched to it according to the direction to be given to the disc 5, which carries the numbers required by the notation for which the machine is constructed. The one described is for decimal notation. The wheels 25, 26, 28, 29, and 30, and pinions 21 and 31, have the same number of teeth as there are numbers on the disc 5 or multiples of that number; the numbers are so placed on the disc 5 that when the shaft 23 is locked one number appears through the aperture in the top plate 1. On the spindle 6 is the primary carrying-tooth 32 which actuates the lever 33 on its fulcrum 34. Its outer arm actuates the pin 36 on the shaft 37 at the end of which is a clip 38 fitting the groove 39 of the stop 18 and tooth 17. The alteration from multiplication to division and from addition to subtraction and *vice versâ* is made by means of slots 40 in a plate 41, Fig. 8, operated by a handle 42, whereby the slots 40, through the pins 43, impart endwise motion to the shafts 44 and the wheels 28 and 29 moved, respectively, into or out of gear with the wheel 30. The plate 41 works freely on the boss. There is a spacing collar 47 for the wheel 7 and plate 41, which latter is kept in place by a collar 48. The erasing is effected by a toothed rack ending in a stop 50 mounted on a lever 51, Figs. 11, 12, and 13. The teeth of the rack gear with pinions 52 on the spindle 6 of the

Text omitted

© B O B Williams Printed22/11/2023 CalcPatents Ed. 1.doc

Edwards R W K 16042/1903 Calc area

16,042. Edwards, R. W. K. July 21.

Calculating-apparatus. — Radiating graduated lines L are drawn at a given angular distance apart on a transparent sheet which is placed over any figure the area of which is required. The intersections of the boundary of the figure with the radiating lines are read off, and from the data thus obtained the area can be calculated in a simple way. The graduation numbers on each line are made to vary with the square of the distance from the origin O.

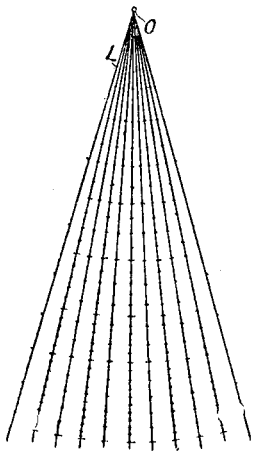

Ehrich P A 21915/1913 Abacus for teaching

21,915. Ehrich, P. Sept. 29.

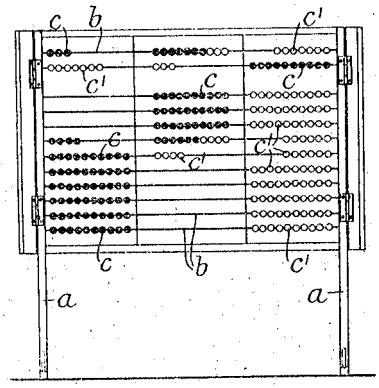

Abacuses.—An apparatus for teaching problems in arithmetic comprises a frame *a* having

507

Eicheus F W 518/1879 Navigation

518. Brewer, E. G., [*Eicheus, F. W.*]. Feb. 10.

Calculating-apparatus for navigation &c. A globe which is free to move in any direction is marked with the equator, poles, equinoxes, &c., and also with the constellations. At the top of the stand 3, Fig. 1, is pivoted a curved arm, the upper part carrying a small cup, which retains the globe in position. The upper part of the graduated circle 2 represents the true horizon of the place; it is provided with a spring and set-screw. The half meridian circle is joined at right angles to the horizon circle. At the middle point (the zero) of the half circle is a pivot round which turns a quarter circle of the same radius, representing the vertical of the star. At its lower extremity the quarter circle slides against the horizon circle, to which it can be fixed by a set-screw. In Fig. 6, the horizontal circle *c*, *c* rests on a support *b*, *b*, and the globe *f* turns on an axis coinciding with that of the earth. A half circle, a little larger than the one carrying the globe to which it is fixed, has in the middle a pivot coinciding with the vertical of the place, and round this pivot two quadrants *a* turn. They are divided from 0° to 86°. This apparatus may be arranged to give angles and arcs to nearly 2°. In this case it will be composed of a globe, a metro-globe consisting of a horizontal circle, a half meridian, a vertical, and a support, but to this must be added pieces to ensure the exact passage of the meridian line through the pole and resting points, allowing slow movements to be given to the metro-globe by means of screws. The system may be applied to celestial globes for school instruction.

FIG. 1.

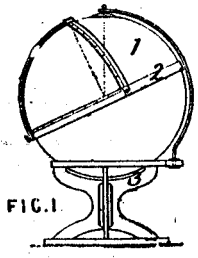

FIG. 6.

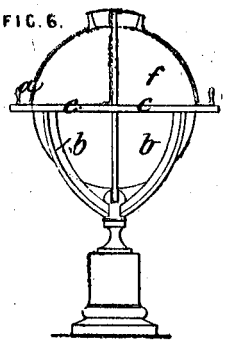

Abridged also in Classes *Philosophical instruments; Writing-instruments &c.*

Ellis H 28253/1908 Adding typewriter

28,253. Ellis, H. Dec. 28.

FIG. 3.

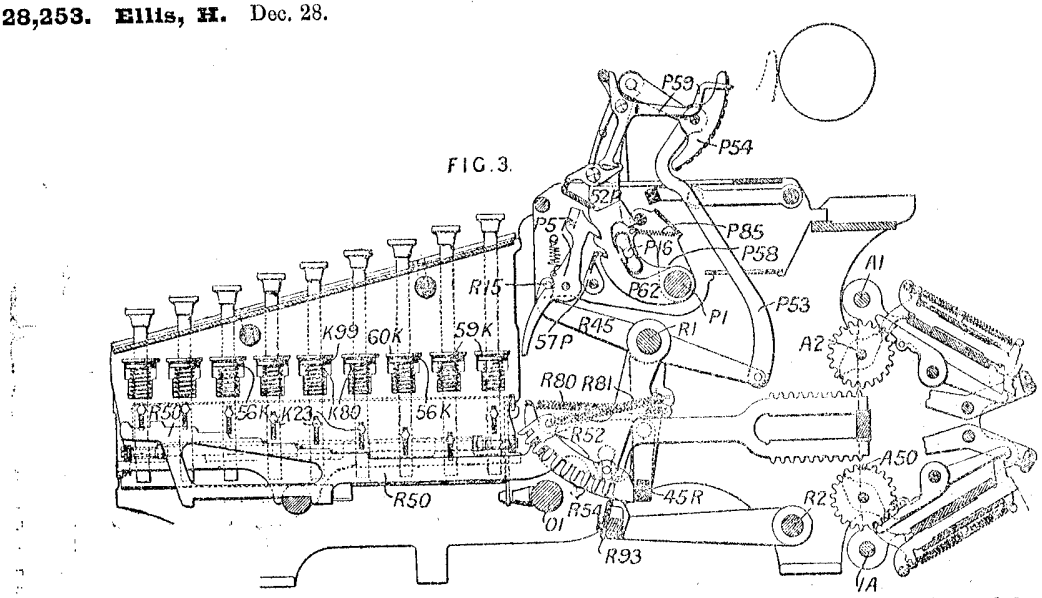

Calculating - apparatus.—Combined typewriters and recording adding-machines, of the kind described in Specification No. 20,422, A.D. 1903, in which both departments of the machine print by means of the same platen, which is that of the usual typewriter carriage, are modified for the purpose of dealing with book-keeping accounts by the addition of a second totalizer below the rack-bars, together with a bank of special keys for controlling the operation of the machine. The adding-machine is of the multiple-bank, key-set, handle-operated type wherein the set keys act as stops for the released rack-bars, which are returned to position while in engagement with a totalizing-counter

937

Elliott-Fisher 5206/1907 Adder on type writer £ sd

the air when pumped in passing between the block *h* and cup *f*. The pressure of the air in the tyre forces the piston out to an extent governed by the spring *i*, the rod *c* being graduated to indicate the pressure against the edge of the conical projection *d* on the plug *b*. A flange *j* prevents the piston from entering the tyre. A cover *k* is secured to the gauge by a nut *l*.

5206. Smith, J. A., and **Elliott-Fisher Co.** March 4.

FIG.1.

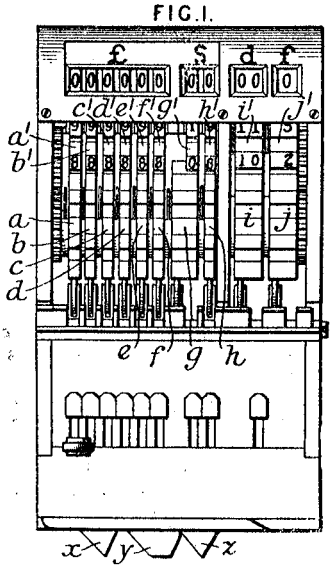

Calculating-apparatus; counting-apparatus.—The totalizing-counter of the adding attachment for a typewriter described in Specification No. 18,341, A.D. 1905, is modified to enable it to register English monetary values. For this purpose, improvements are introduced in: (1) the arrangement of numeral wheels and means for actuating them; (2) the transfer mechanism; and (3) the zeroizing-mechanism with the associated controlling-devices therefor. (1) The master actuating-wheel 4^a gears in turn with each of the receiving-wheels *a* . . . *j*, Fig. 1, which are uniform as to pitch and number of teeth and gear with their respective numeral wheels a^1 . . . j^1, of which the six pounds-wheels and two shillings-wheels upon the left have each ten teeth and revolve at the same rate as their receiving-wheels, whereas the two pence and farthings wheels upon the right are twelve-toothed wheels of equal pitch and therefore do not complete a turn for one revolution of their receiving-wheels. The receiving-wheels are upon a common shaft 3, Figs. 8 and 10, while the numeral wheels are upon two shafts 5, 6, each vertically above the lower shaft but at different distances therefrom to allow for the greater diameter of the pence and farthings wheels. The numeral keyboard contains keys from 1 to 11, and additional spacing-trips *x*, *y*, *z* are added for regulating the spaces according to the arrangement of the counter. (2) Transfer is arranged to take place three times per revolution in the case of the farthings-wheel and five times in the

FIG.8.

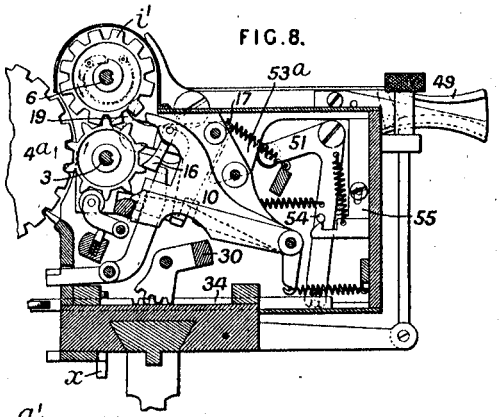

FIG.10.

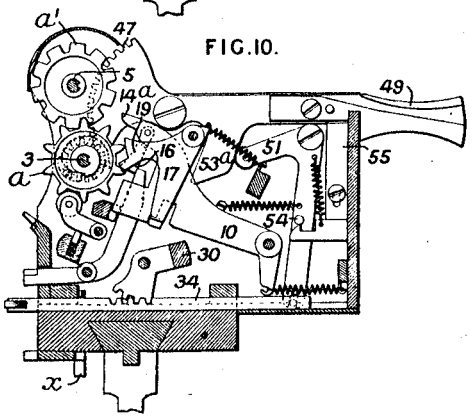

case of the tens-of-shillings wheel, and the transfer teeth are placed upon the numeral wheels, but for other denominations upon the receiving-wheels. The mechanism is of the independently-restored type described in the above Specification, wherein the transfer tooth forces backwards a projection 19 upon a pivoted spring-controlled locking-dog 17, and the transfer lever 10 then moves downwards so as to actuate the higher wheel by means of a pawl 16 previously positively put into engagement, and to prevent its overthrow by contact of the upper arm 14^a, both the locking-dogs and levers being subsequently restored by a yoke 30 which is rocked when the carriage on its return movement presses in the rack 34. The different position of the transfer teeth of the pence and farthings denominations necessitates the form of locking-dog shown in Fig. 8. (3) Zeroizing is effected by rotating each of the spindles 3, 6 through a little more than a revolution, for which purpose a handle and sector 49, 47 are provided, the two spindles are intergeared, and the eight receiving-wheels on the left together with the pence and farthings numeral wheels have spring pawls whereby cams fast upon the rotated spindles carry them round in the normal

Elsdon C H 11034/1898 Calendar tab calc discs

11,034. Elsdon, C. H. May 14.

Calendars; calculating-apparatus.—Three discs 1, 2, 3 turn on a common centre. The disc 2 is marked on the edge with the days of the week repeated five times, and the disc 1 with the months properly spaced so as to show the first day of each month throughout a year when correctly set for any month. At the back of the disc 1 are marked columns of centuries beneath which are slots showing the individual parts of the centuries placed in columns at the back of the disc 2. By means of this arrangement the discs 1 and 2 are adjusted for any year. On the disc 3 is a monthly calendar as shown, which can be adjusted for any month by bringing the number 1 below that month and its first day of the week shown on the other discs. Letters and numbers in dotted lines provide for leap-years.

FIG. I.

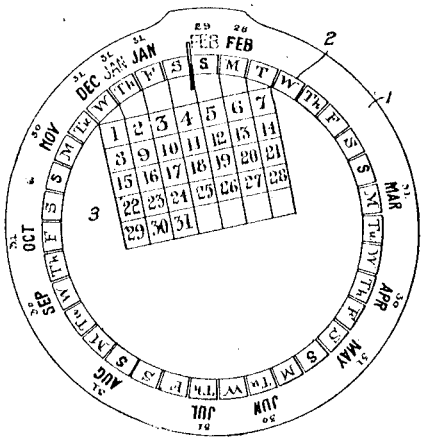

Empire Cash Register & Collins N 10904/1900 Cash Register

10,904. Empire Cash Register and **Collins, N.** June 15.

Receipts, checking and recording; calculating - apparatus.—Relates to improvements on the cash register described in Specification No. 25,241, A.D. 1897, means being provided to furnish printed records of each individual amount of cash received and the aggregates of the several amounts recorded as well as a record of the time at which each transaction is registered. Three spring - rotated stud barrels 2, Fig. 2, corresponding to pounds, shillings, and pence, are geared directly with corresponding type - wheels through gear-wheels 10, 11, and 12, the wheels 12 being fast on the type-wheel shafts, which are concentric. Each key lever 17 of one bank is pivoted on a cross-rod 16, and when depressed raises a cross-bar 18 carried by arms 19, also pivoted to the rod 16 and carrying a cam 20 operating a stud on a detent lever 21 pivoted loosely on a shaft 22 and having a lug 23 to engage a stud 24 on the barrel 2, and thus retain it in zero position. The key lever operates a detent 26 adapted to be brought into the path of one of the studs 25 on the barrel. The detent is preferably carried by a pair of plates 27 pivoted on the rod 16, straddling the lever, connected by studs 28 and 29, and pressed upwards by a spring 30. The barrels are geared to concentric shafts 32, for adjusting

FIG.4

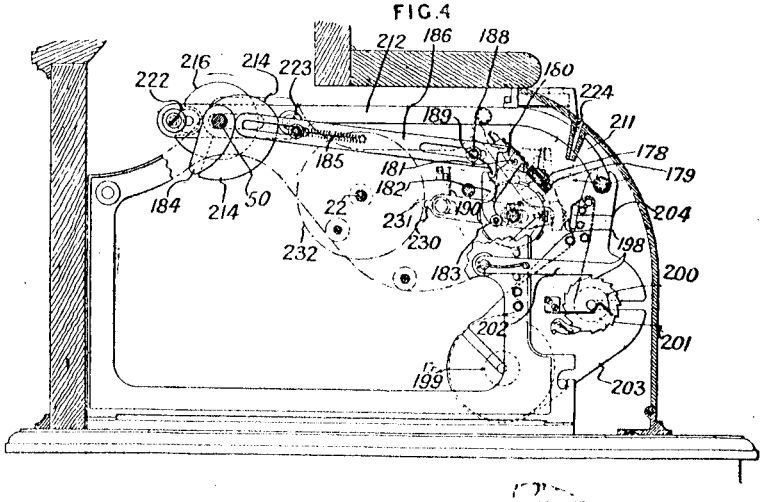

FIG.2.

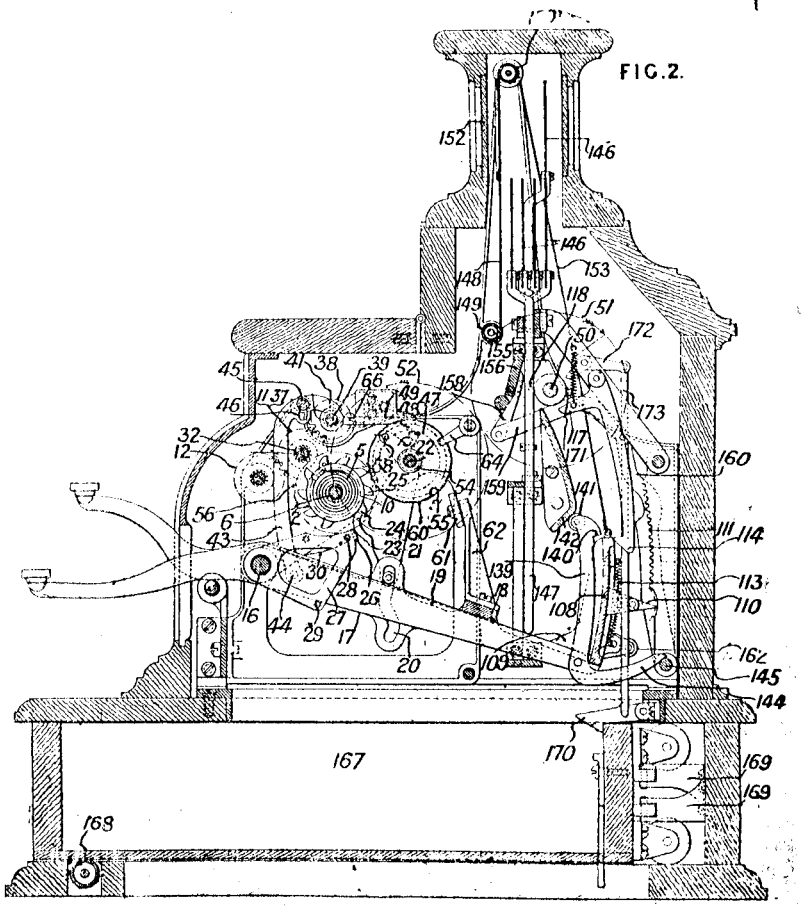

Enberg J C 19145/1914 Machine multiply by partial products

19,145. Enberg, J. C. Aug. 28, 1913, [*Convention date*].

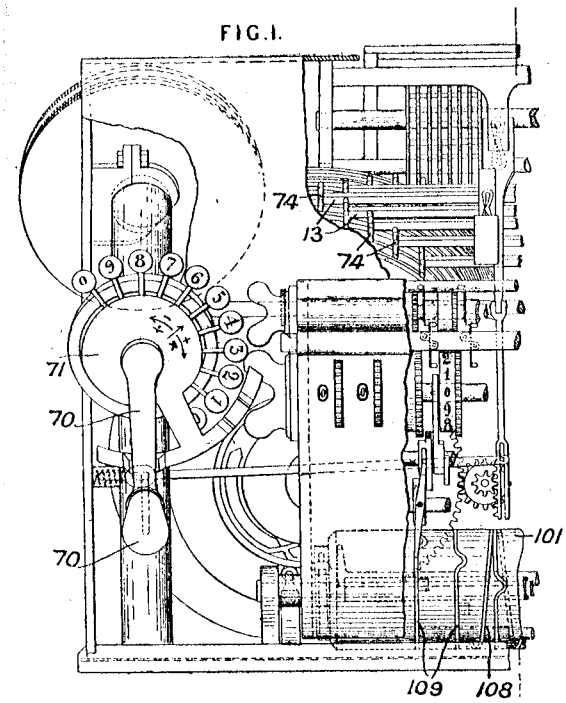

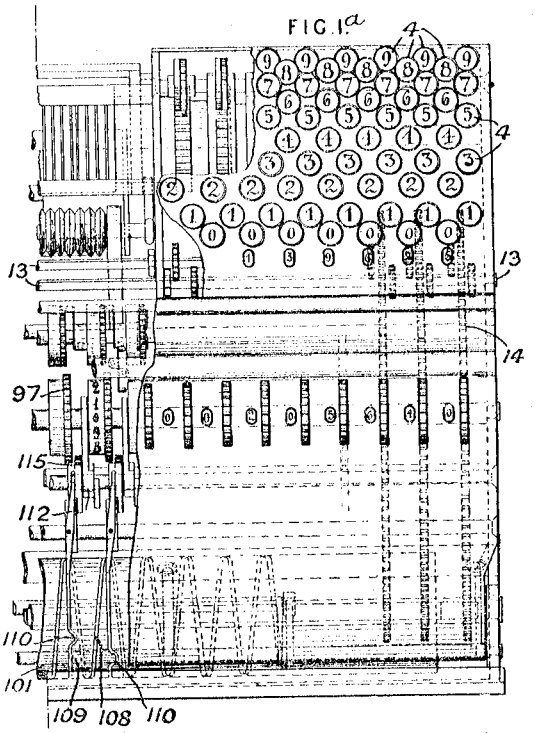

Multiplying and dividing apparatus.—A machine of the type employing calculators provided with representations of the partial products, has the calculators arranged in pairs, one representing units and one tens for each product, the representations being capable of acting in a positive or negative sense so that for numbers with a digit above 5 the representation may be the succeeding multiple of ten less the difference. In the construction described, the representations take the form of teeth upon cylinders, the units and tens being on opposite sides of the cylinders and the inclination of the teeth varying according to whether their effect is to be additive or subtractive. These calculators mesh with toothed wheels which transmit their motion to totalizers mounted upon a carriage which is given a lateral movement after

© B O B Williams Printed22/11/2023 CalcPatents Ed. 1.doc

each operation of the machine. The result and nature of the operation are recorded by printing - mechanism. The calculators 33, Figs. 2 and 3, are mounted so as to be radially movable in the cylinder and are returned by a circumferential slack spring 41, double arms 53, conveniently staggered and mounted in the cylinder being selectively rotated from a

FIG.2.

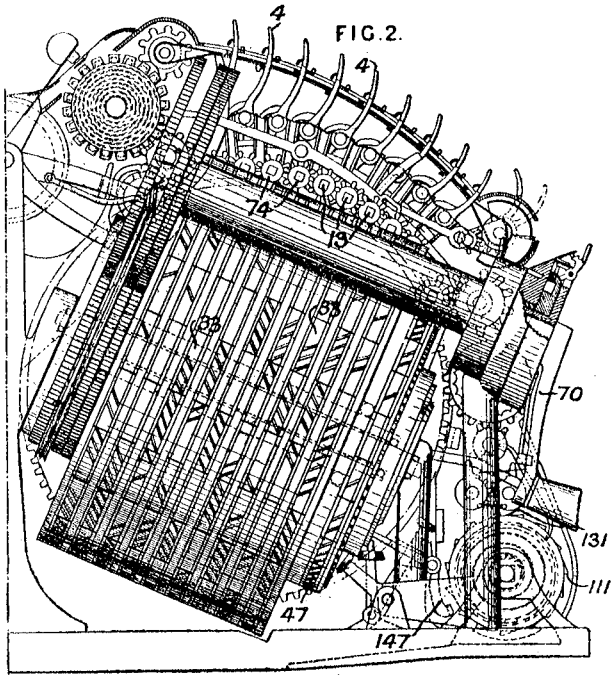

FIG.40.

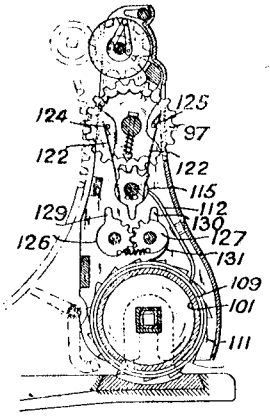

multiplier or divisor keyboard 71, Fig. 1, to project the required calculators. A similar calculator ring 47, Fig. 2, is provided at the end of the main cylinder to operate an indicator for the multiplier or divisor or the number of operations in the case of addition or subtraction, but the calculator is moved out at only one side at a time so as to be operable independently of the direction of movement of the operating-handle 70, Fig. 1, indications being provided for the requisite direction of movement according to the operation performed.

Keyboards.—The multiplicand or dividend is set upon a keyboard 4, Figs. 1[a] and 2, the keys of which are arranged in staggered relation, and cause an axial movement of corresponding pinions, which are mounted upon square shafts 13 carrying at their front ends the pinions 74 which gear with the calculators. This axial movement brings the square shafts into driving connexion with spur-wheels 14, which engage the pinions 97, Figs. 1[a] and 40, of the result-totalizer mounted in the register carriage. A spring band with sufficient sag for the depression of one key only of a bank at a time governs the keys. This mechanism is described in detail in Specification 19,146/14.

Totalizing-counters. — The register carriage comprises a fixed part and a movable part, the latter part comprising a drum 101 provided with a helical groove 108 for moving the carriage and a groove 109 for effecting the transfer. The carriage is also tilted by means of a cam to bring the register wheels 97 out of gear with

FIG.3.

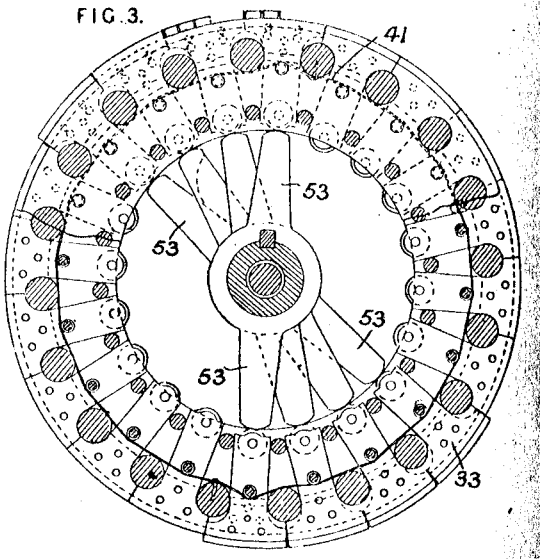

the wheels 14 during the movement of the carriage and during the resetting of the apparatus to change from one kind of operation to another. The carriage is held stationary during the first half-revolution of the carriage for registering the projected unit calculators and is then moved longitudinally through one step to register the tens during the remaining half-revolution of the carriage. This is effected by giving a rotation

to the drum 101 by cam mechanism mounted upon the calculating-cylinder; when movement is to be given to the drum, a lever 147 is moved by the control cam mechanism to engage the helical groove in the drum and thus cause it to move the drum axially during its return rotation under spring action. The control of these drum movements is effected by cam mechanism set by the operating-handle according to the operation to be performed.

Printing-mechanism is arranged to give a record of the factors and result as well as the nature of the operation performed and the position of the decimal point.

Transfer mechanism.—This drum has a number of circular grooves 109, Figs. 1[a] and 40, provided with staggered bulges 110 in which engage levers 112 whose other ends are attached to sectors 115 which are axially movable to engage the register wheels 97 of the next denomination. At transfer of any denomination in either direction, pins 124 or 125 engage barbed spring arms 122 and move the sector 115 through one tooth; the sector is then moved axially by the bulge 110 and lever 112 to engage the next register wheel, and the actual transfer is effected through the engagement with a tail on the sector of one or other of similar tails 129, 130 on sectors 126, 127 which are rotated by the engagement with teeth 111 upon the drum of a spring 131 carried by the sector 127. The staggered arrangement of the bulges causes a transfer *seriatim*. In a modified construction the spring arms are replaced by a single tooth engaging a jockey pinion in gear with the toothed sectors.

Enberg J C 19146/1914 Adder cash register

19,146. Enberg, J. C. Aug. 28, 1913, [*Convention date*].

Adding-apparatus and cash registers with operating-means.—The key-levers have pivoted thereto transversely rocking frames 8 with cross-plates 9 provided with transverse slots 10; these slots are engaged by lower projections on the levers and thus move a selected pinion 12 into engagement with a transmitting-member 14, by means of which the motion given to the corresponding square shaft 13 is transmitted to the totalizer.

Keyboard interlocks.—A steel spring or the like 16 passes over the key shafts 6 and is engaged by horns 15 on key-levers; the length of the spring is such that only one key can be depressed at a time and that the depression of another key raises the one previously depressed. Spring snaps 17 hold the keys depressed until released.

Indicators; displaying items; item-printing mechanism.—The Specification as open to inspection under Section 91 (3) (*a*) comprises also a band 25 connected at one end to an indicator 21 and at the other to an item-printing shaft 50, and carrying stops 27 adapted to be moved differentially by the key-levers. This subject-matter does not appear in the Specification as accepted.

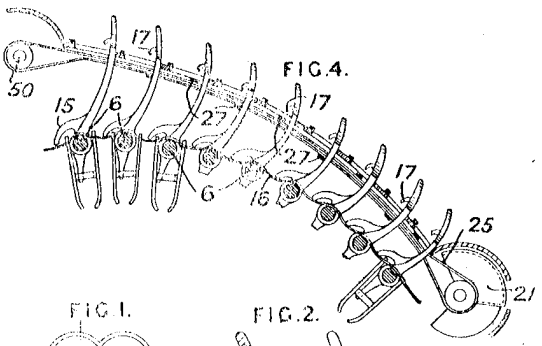

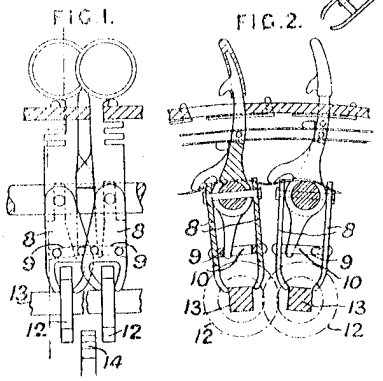

English T 12596/1905 Calc by parallel lines

12,596. English, T. June 17.

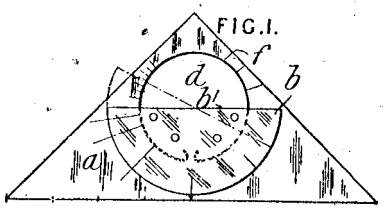

Calculating-apparatus.—An instrument specially graduated to facilitate the ruling of parallel lines is used to perform various calculations. The protractor *b* is pivoted in the circular hole *d* formed in the square *a*. The graduation to which the ruling edge b^1 is set gives the ratio of the distance between the parallel lines to the displacement of the edge of the set-square along the guiding ruler. Since lengths can be multiplied or divided by this instrument, it can be used for graphically solving various arithmetical and trigonometrical problems involving these operations.

Ensign E S 22824/1904 Multiplier

22,824. Ensign, E. S. Oct. 22.

Calculating-apparatus; counting-apparatus. — In keyboard multiplying-machines, the main keys set operating-segments, and the multiplying keys control the revolution by a spring motor of the totalizing-counter which is operated by the segments as it passes them, the number of revolutions of the counter in the various places of the multiplier being recorded on an indicator which produces an inverted multiplier. The machine can also be used for addition. The front elevation, Fig. 2, of the machine with the cover removed shows five sets of nine discs each, 86, which are set by the main keys, and the nine levers 112 of the multiplying-keys, the totalizing-counter 65 and the indicators 109. The main discs 86 carry teeth 90, Fig. 4, according to the number of the key, and the teeth of discs of various orders are arranged in succession 171, 172 beginning with the units, whereby the counter registers numbers of different orders in turn, from the lowest upwards. Each disc has slots 165, 161 through which pins 166, 162 pass in such positions that depression of the key 32 throws the teeth into the path of the counter, the front cover being slotted so as to lock the shanks 29, and having a lever attachment whereby it may be moved slightly sideways to allow all the depressed keys to return under the influence of springs and gravity. The discs are confined by side-plates and walls 91, 85 and are normally forced to the right in each set by a spring 93. The spring moter 41 is provided with a winding-knob 42 and through gearing rotates the shaft 44 under the control of the multiplying-keys, the cylinder 46, 47 being keyed to the shaft and capable of sliding along it to the right under the tension of a spring 143 when the spring-held lever 51 is depressed. This lever has a tooth 55

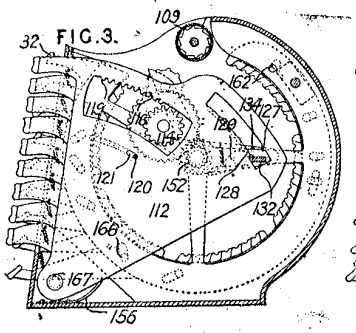

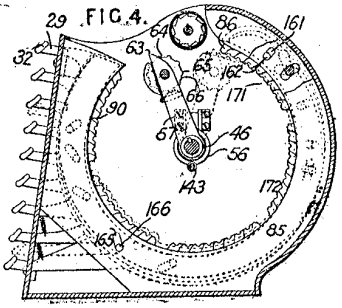

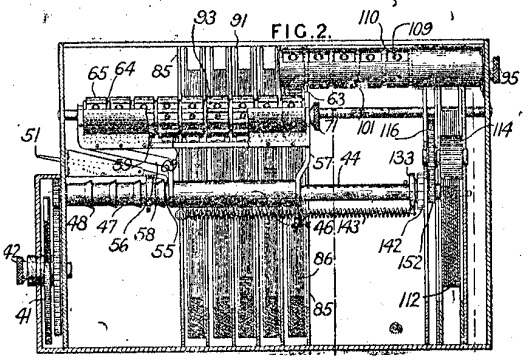

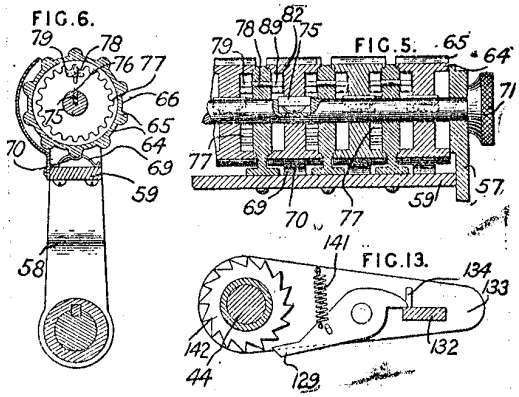

More text omitted

Esnouf A 20424/1913 slide rule for steel work design

20,424. Manes, L., [*Esnouf, A.*]. Sept. 10. [*Cognate Application*, 5819/14.]

Slide-rules.—A rule for calculating the factors of safety, crippling-stresses, and safe loads for struts, columns, stanchions, &c. according to any of the usually accepted formulæ may have the usual rectangular, or a cylindrical, or disk form. In the rectangular form, the rule comprises a base *a*, Fig. 1, having scales *g*, *h* of length and cross-sectional area, respectively, a recess or groove for the slide containing further scales *n*, for the factor of safety, and *m* and a slide *b*, Fig. 2, bearing scales *i*, *j*, *k*, *l*, for the least transverse dimension of the strut, least radius of gyration, the crippling-stress, and safe load in tons, respectively. The rule also comprises a cursor *c*, fixed celluloid bridges *d*, *e*, and a reference mark *p*. A simpler form of slide-rule for calculating crippling-stresses and factors of safety only, having a rectangular shape, is shown in Fig. 4. In this form the base *a* bears scales *g*, *n* (in the groove *f*) for the length of the strut &c., and factors of safety, while the slide *b* is graduated for scales *i*, *j* of least transverse dimension and radius of gyration, and a scale *k* which co-operates with a fixed index *q* to show tons per square inch.

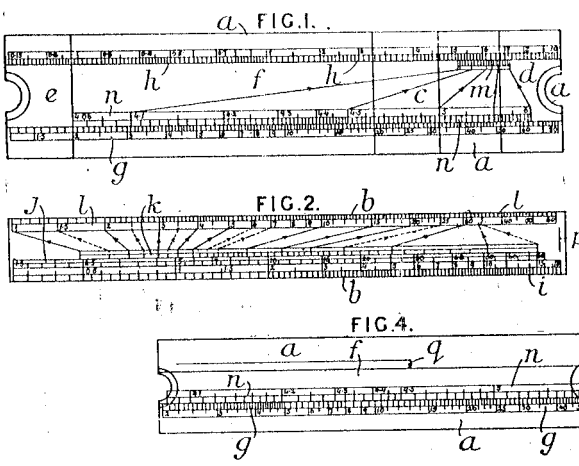

FIG. 1.

FIG. 2.

FIG. 4.

Esser H 10512/1894 Multiply & Divide

Heinrich Esser – a forgotten pioneer (in German)http://www.arithmeum.uni-bonn.de/7fruehereVeranstaltungen/Sonstiges_KinderVortraege/esseruebergabe.htm

10,512. Golby, F. W., [*Esser, H.*]. May 30.

Calculating apparatus.—The apparatus is for multiplying and dividing. It consists of three principal parts, the operating indicator S on which the multiplicand is set out, the quotient indicator D on which the multiplier is set out, and the product indicator C which is zeroized to begin with.

The multiplicand is set out on a series of numbered drums and appears through an aperture in the casing. In so setting the drums spring strips engaging movable teeth *h* project the corresponding number, so that when the shaft A is turned

FIG. 1.

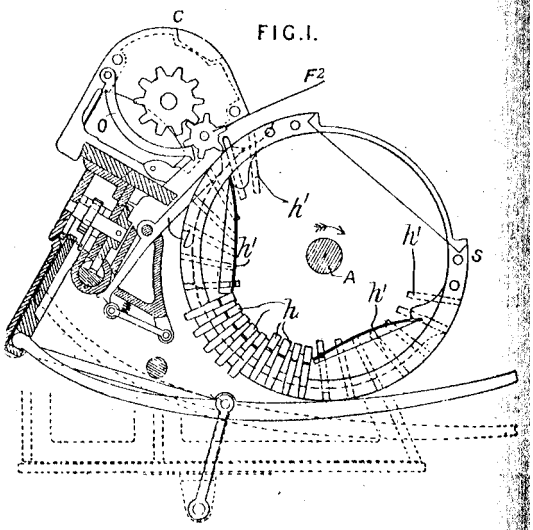

FIG. 3.

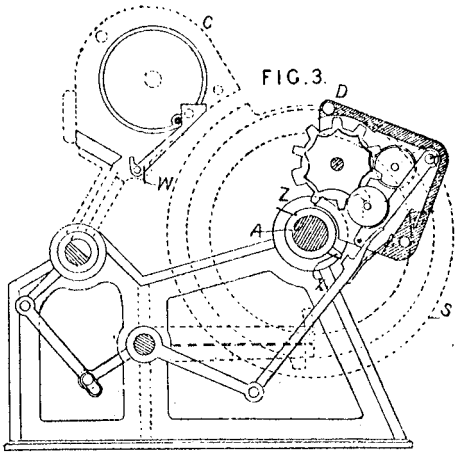

they will gear with the wheel F^2 and so actuate the numbering wheels of the indicator C. Whenever any of these numbering wheels passes zero a lever W, Fig. 3, is operated, acts upon a lever *l*, and throws it into position to project another tooth h^1 into engagement with the wheel F^2 of the next higher denomination. The quotient indicator D, which has also special carrying and control mechanism, is operated one wheel at a time by a pin *z* on a sliding collar Z. The indicator C can be slid by steps along its supporting bed so as to be multiplied in turn by the units, tens, hundreds, &c., and being geared by racks and a pinion with collar Z moves the same into gear with the units, tens, hundreds, &c. of the indicator D. Thus, if 5746 is to be multiplied by 419, the former number is set out on the operating indicator S, C is slid into position, and the shaft A rotated by a crank handle nine times, when zero will appear in the units place of the indicator D. The indicator C is then slid one step and the crank handle turned once, then again a movement of the indicator C and the crank handle turned four times. The indicator D will now show zero and the indicator C the required product. In division the indicator D is zeroized, the indicator C is set to show the dividend, and the operating indicator S the divisor. The shaft is then turned backwards, and after the complete operation the indicator D will show the product. By combining the methods the work of multiplication may be abridged. Thus, in multiplying by 419 (beginning in the hundreds position), make four rotations with the crank to the right, slide the indicator, rotate the shaft twice to the right, slide the indicator, rotate the shaft once to the left. Special mechanisms for ensuring exact working and readily zeroizing the indicators are described in the Specification.

© Ed. 1.doc

Essex E H 6278/1908 Poly slide rule for flow rates

6278. Essex, E. H. March 20.

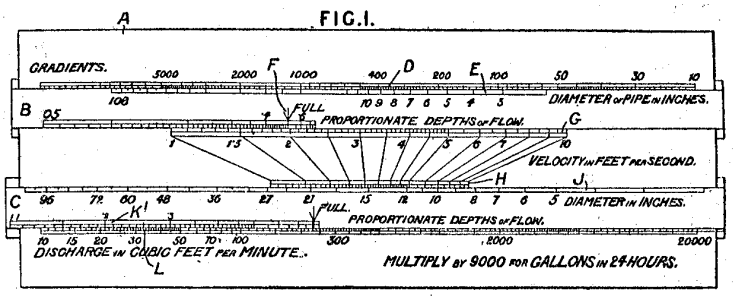

Slide-rules adapted for calculating the velocity of flow and rate of discharge, and in the case of gases the loss of pressure, of fluids in pipes, culverts, &c. comprise scales proportional to the logarithms of the following quantities: D, the square-root of the sine of the inclination of the pipe corresponding to various gradients; E, the hydraulic mean depth corresponding, it may be, to the diameters of circular pipes, or to the diameter of the top arch of ovoid culverts; F, certain constants with an arrow showing the one generally employed; G, H, velocity of flow; J, the areas corresponding to the diameters of the pipes; and K^1, the proportionate depth of flow with an arrow for a full pipe. The scales E, F and J, K^1 are placed upon sliders B, C respectively, and the remaining scales on the stationary baseboard A. In use, the diameter on the scale E is set against the gradient on the scale D, and the velocity is read on the scale G against the constant on the scale F. The discharge is obtained by setting this velocity on the reduced scale H against the diameter on the scale J, and reading on the scale L against the depth on the scale K^1. Alternatively, the device may be in disk form with the scales D, L on the rim, the scales E, J on revolving annular disks, and the scales G, H on stationary disks.

See [15]

Essmann A 15100/1915 A S M D Print

15,100. Essmann, A. Oct. 28, 1914, [*Convention date*]. *Void* [*Published under Sect. 91 of the Act*].

Adding and subtracting apparatus; multiplying-apparatus; checking receipts.—An apparatus for calculating and printing bills and a record-strip, according to the indications of a totalizing-meter, co-operates with detachable totalizers by means of which the last-taken reading of the meter is thrown into the machine and is subtracted from the current reading, which has been previously set and recorded. The resulting difference, representing consumption, is then printed, and the tariff is set up and printed and is multiplied by the consumption, the resulting charge being then printed; standing charges are then set up and printed and added to the consumption charge, the total being subsequently printed and a bill issued for the consumer. The machine is operated by means of the printing-lever G^2, Fig. 4, which carries two printing-platens co-operating respectively, with item and result type-wheels A^2, B^1, and giving at each operation a part-rotation to a cam shaft E^2, from which the sequence of the various operations of the machine is controlled. The wheels B^1 carry two type sets, one for printing a voucher on a reciprocating carriage H, and one for a record strip printed by a platen G^{21}. The item-wheels A^2 are actuated from handles C^1, provided with indicating-means, through racks D^1, which are arranged between pairs of racks engaging the wheels B^1 and may be selectively connected to the racks D^1 to be driven in the same or opposite directions for addition or subtraction. The item-wheels A^2 are reset by driving their racks to zero position after every record of their setting has been made; and at the end of the operation, the racks for the result-wheels B^1 are moved to the left to leave them in their "nines" positions, prior to the attachment of

FIG. 8.

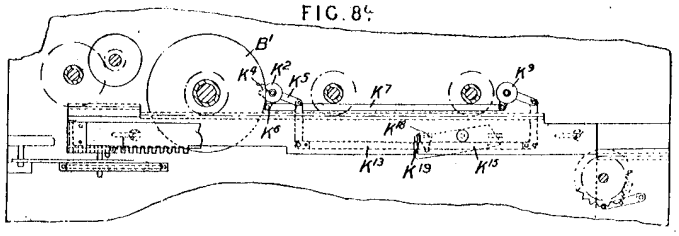

FIG. 4

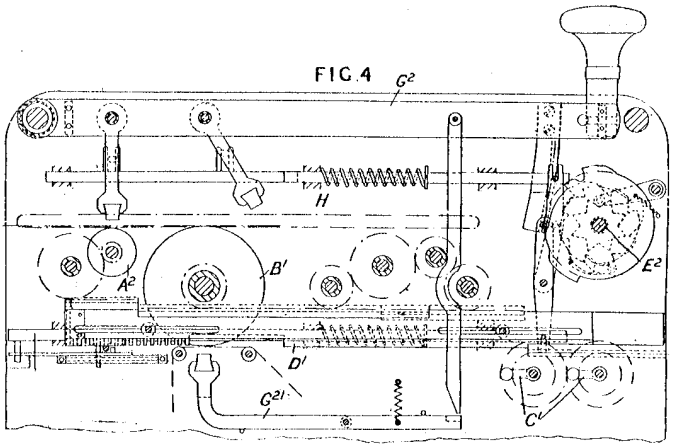

© B O B Williams Printed22/11/2023 CalcPatents Ed. 1.doc

Evans W J 24662/1910 Adder days between dates, disks

24,662. Evans, W. J. Oct. 24.

Adding and subtracting apparatus.—An instrument for use in ascertaining the number of days between any two dates &c. comprises a fixed disk *d*, graduated to show days of the month and of the year, a toothed wheel *h*, and a pointer *o*, the wheel and pointer being rotatable either relatively or together. In using the apparatus, the pointer is moved to the first of the two dates, as shown on one of the scales on the disk *d*, and is then caused to engage the wheel *h* by depressing the hinged toothed portion *q*. On rotating the pointer to the second of the dates, the number of days intervening is shown on the second scale by an

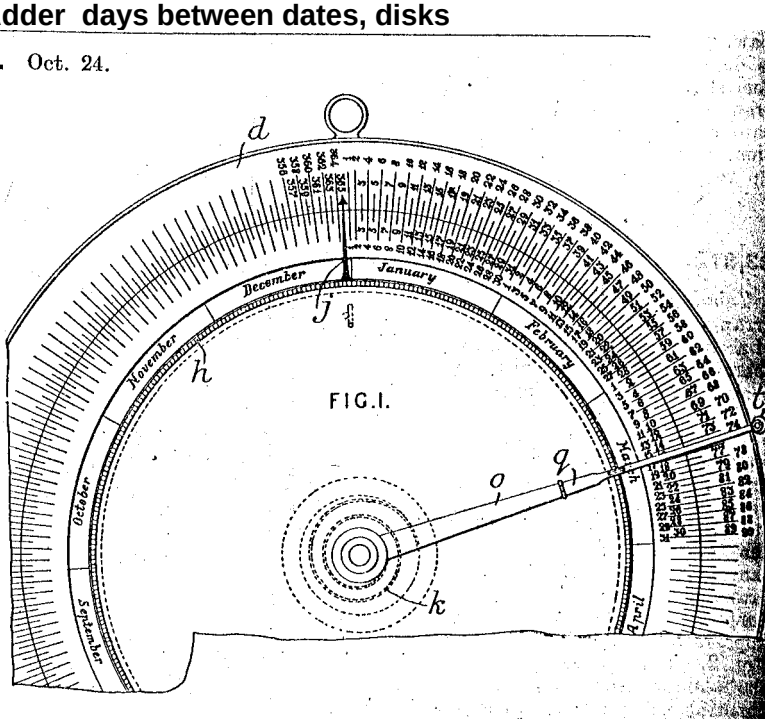

FIG. I.

Evans-Cross G W 10459/1906 Tab calc

10,459. Cross, G. W. Evans-. May 4.

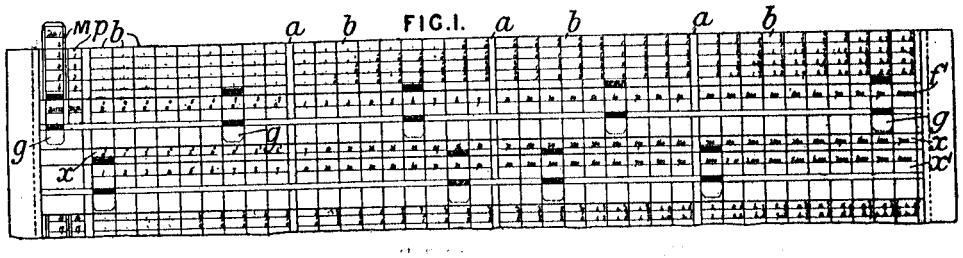

Calculating - apparatus. —Relates to double-argument special-factor multiplication tables, such as those for interest, wages &c., with movable argument scales and proportional scales for use therewith. Fig. 1 shows: (1) a base-plate *a*, *b* bearing a table of interest upon various sums for various periods at a fixed rate per cent, arranged so that the monetary cross-argument, which is of great extent, may be broken up into nine columns only for each denomination, e.g. 1, 2, 3 . . . 9; 10, 20, 30 . . . 90, &c.; (2) a slide f^1 which bears this argument and is provided with markers *g* for distinguishing the figures which are comprised in any given entry, whereby the argument, in this case monetary amounts, can be moved up and down and so brought to the required number of days as shown by the left-hand fixed argument *p*; (3) subsidiary scales x, x^1 which are for convenience mounted in conjunction with the argument scale to slide upon the base-plate, are provided with cursors, and bear adjacent numbers in a fixed proportion in order that the constant percentage factor of the base-plate may in effect be altered by entering the table with an amount increased or decreased in any desired given proportion; by employing various different pairs of scales x x^1, one of each pair being always a reproduction of the argument scale f^1, the constant factor of the base-plate may be altered as required; (4) a laterally-movable scale (not shown) which is similar to the argument scale f^1 and may be slid through any whole number of denomination widths in either direction for the

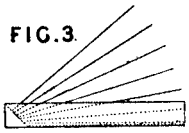

P 12508

T

© B O B Williams Printed22/11/2023 CalcPatents Ed. 1.doc

Ewington H 3566/1812 Navigator's Sector

A.D. 1812 N° 3566.

Navigator's Sector.

LETTERS PATENT to Henry Ewington, of the City **of Bath, Schoolmaster, for his invented " INSTRUMENT CALLED ` THE NAVIGATORS SECTOR, ' BY WHICH ANY PERSON IS ENABLED TO ASCERTAIN THE DIFFERENCE OF LATITUDE, DEPARTURE FROM THE MERIDIAN, AND DISTANCE SAILED WITH THE COURSE ; ALSO TO SOLVE ANY PROBLEM GEOMETRICALLY THAT NAY BE REQUIRED, TO SHEW THE ANGLES, HYPOTENUSE, PERPENDICULAR, AND BASE ;"** to hold to him, his executors, administrators, and assigns, within that part of our United Kingdom of Great Britain and Ireland, called England, our Dominion of Wales, and Town of Berwick-upon-Tweed, for the term of Fourteen Years, pursuant to the Statute ; with a clause to inroll the same within two calendar months from the date thereof ; and also with a clause for supplying His Majesty's Service with all such articles of the said Invention as shall be required by the master general of the ordnance for the time being. By writ, &c.

Dated 14th May 1812.

(No Specification enrolled.)

LONDON :

Printed by GEORGE EDWARD EYRE and WILLIAM SPOTTISWOODE,
Printers to the Queen's most Excellent Majesty. 1857.

Faber 10230/1903 slide rule log of numbers scale

10,230. Castell, Count A. von Faber-. May 5

Slide rules. — A slide rule has, in addition to the usual scales, a scale marked upon its bevelled edge *a* corresponding to the logarithms of logarithms of numbers. The cursor consists of a side plate *e*, fitting over the two scales and having in it two slots *f*, between which is a bridge *g*, one side of this corresponding exactly to the central line on the ordinary cursor.

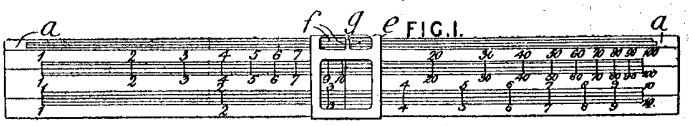

Faber A W 10753/1913 Slide rule frame

10,753. Thompson, W. P., [*Faber, A. W.*]. May 7.

Slide-rules.—The frame is formed in two parts, an upper part *a*, *c*, and a lower part *b*, *d*, separated by a longitudinal slot *e* into which is inserted a tongue *f*. The parts are secured together by glueing them to the tongue and may be further secured by means of pins. In a second form, the bottom portions *i* are formed in one with the cheeks *k* of the frame, the two portions are connected by steel strips *o*, and the frame is strengthened by means of metal stiffeners *s* and graduated celluloid strips *r*.

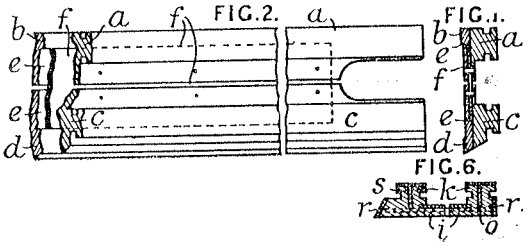

Fairchild C 2130 /1902 cash register

2130. Mills, B. J. B., [*Fairchild, C.*]. Jan. 27.

Receipts, checking and recording.—Relates to the machine described in Specification No. 22,367, A.D. 1898. The complete machine delivers change and

37

Fairchild C 20201/1902 Adder

20,201. Mills, B. J. B., [*Fairchild, C.*]. Sept. 16.

Receipts, checking and recording; calculating-apparatus.—Relates principally to the machines described in Specifications No. 2130, A.D. 1902, and No. 23,367, A.D. 1898. Parallel shafts 4 ending in dials 2, respectively, for, say, farthings, pence, units and tens of shillings, units, tens, &c. of pounds, are turned in one direction by ratchet driving-gear, which is operated by spur-racks 6 in gear with loose spur pinions 5 attached to ratchet pinions 7. The driving occurs when the racks are shifted back by cams 30 after they have been pulled to the right by springs. The racks, having shoulders 16, are normally held to the left by wards 18 on shafts beneath them, but sets of transverse slides 12 with single lugs 13 are provided for each rack, which, when shifted by keys 14, disengage the wards and limit the displacement of the racks according to the values of the keys. The construction and action of the carrying-mechanism between one shaft and the next is as follows:—The left-hand displacements of the racks are determined by the stepped ends of bails 28 on shafts 33; and, when a dial shaft completes a revolution, a cam 31 on it sets the bails corresponding to the adjacent receiving-dial, so that the associated rack can take both steps, the bail being held off till this motion

Falletti E 6782/1893 Surveying

6782. Falletti, E. March 30.

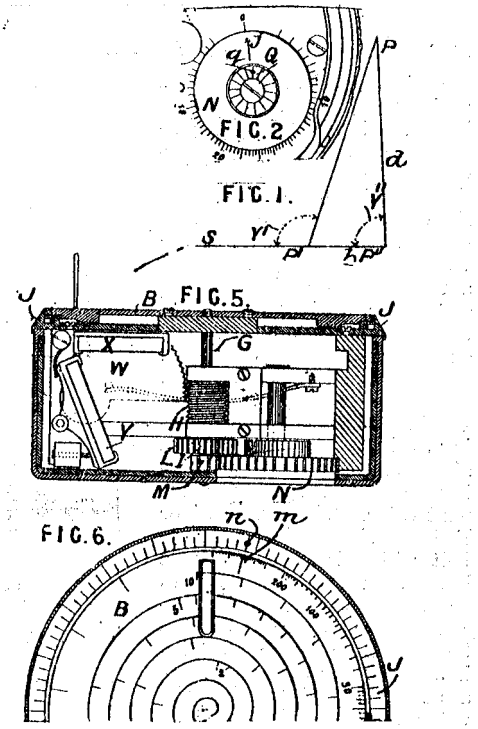

Calculating-apparatus.—In the solution of the triangle P, P^{I}, P^{II}, Fig. 1, for surveying, we have $d = \frac{b \sin \gamma^{I}}{\sin (\gamma^{I} - \gamma^{II})}$. The object of the present invention is a sighting-instrument which shall determine the two factors $b \sin \gamma^{I}$ and $\frac{1}{\sin (\gamma^{I} - \gamma^{II})}$. The instrument consists of a box with rotatable cover B, Fig. 5, two mirrors X, Y, the former movable, a diopter or its equivalent (not shown), and other mechanism. The mirror X is carried by a toothed quadrant W gearing with a worm H on a central spindle G rotating with the cover B. G can make fifteen revolutions, whereupon it is arrested by mechanism analogous to the Geneva stop. G is geared through wheels I, L, M with a dial wheel N (see Fig. 2). in the centre of which is an adjustable dial Q (rotating independently) with

7

Fallon C J 1986/1906 Abacus

1986. Fallon, C. J. Jan. 26.

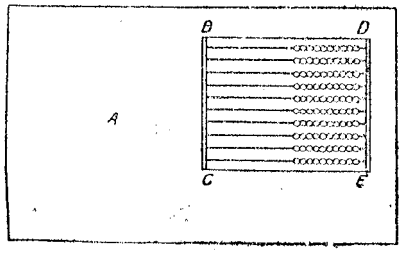

Calculating-apparatus.—An abacus composed of wires each carrying balls is inset into a space cut out of a blackboard A, the wires being held in position by two strips DE, BC of wood or metal screwed or nailed to the board.

Farini P 5088/1899 Drawing square

5088. Boult, A. J., [*Farini, P.*]. March 8.

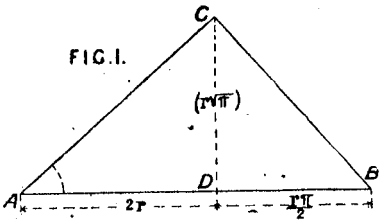

Calculating-apparatus.—A drawing-square, which may have a semicircular aperture cut out and graduated as a protractor, and a scale along its

7

Farmar F C 19288& 9/1899 Cask slide rule & dip rod

19,288. Farmar, F. C. Sept. 26.

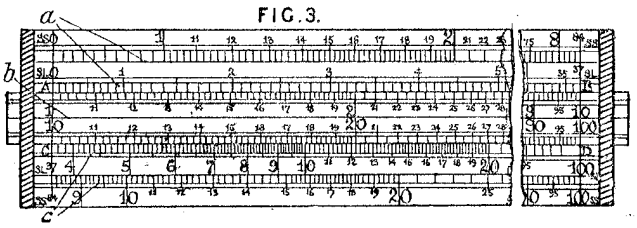

Slide-rules.—The rule is for calculations concerning casks. On one face of the slide are two ordinary logarithmic scales *b*, while the stock is marked above and below with the required scales *a*, *c* for computing the ullage-quantities of lying and standing casks, the scales being broken at 37 and 84 respectively on the upper part and continued on the lower. At the back, the upper half of the rule and stock are marked with ordinary logarithmic scales, and the lower halves with enlargements, preferably tenfold, of portions thereof.

19,289. Farmar, F. C. Sept. 26.

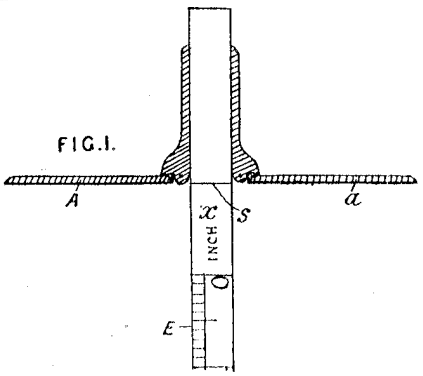

Cask gauges.—Relates to a dip-rod for taking vacuities. The rod E is graduated downwards on its four faces in inches and tenths, a space *x* being left, however, between the starting point *s* and the zero to allow for the thickness of the wood. The space on the face shown is 1 inch, and on the others it is preferably $\frac{1}{2}$, $\frac{3}{4}$, and $\frac{1}{10}$ of an inch. The folding arms A, *a* are for resting on the cask when the rod is passed through the bung. The rod may be rule jointed for convenience of carriage.

Farmar F C 8309/1901 Slide rule for alcohol

8309. Farmar, F. C. April 23.

FIG.1.

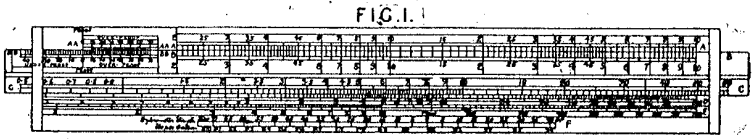

FIG.2.

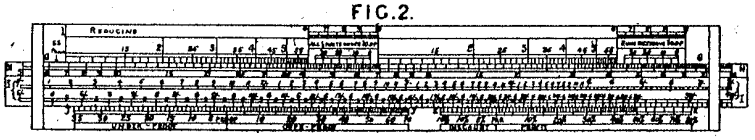

Slide-rules for calculations in connection with the reducing, ullaging, proofing, blending, &c. of wines and spirits. Figs. 1 and 2 show the front and back of the rule respectively. The radii, and starting points, of the logarithmic scales shown are as follows :—

Fig 1.			Fig. 2.		
Scale Line.	Radius	Starting point.	Scale Line.	Radius.	Starting-point.
A A	10-inch	Proof.	G	10-inch	1
A	10-inch	2	H	10-inch	5
B B	10-inch	40 u.p.	I	26-inch	1/– and 5/– respectively.
B	10-inch	2	J	26-inch	35 u.p.
C	11-inch	0·5	K	26-inch	15 per cent. Discount.
D	11-inch	1			
E	11-inch	1			

The ordinates of the gauge-points are as follows :—

The ordinates of the gauge-points are as follows :—

Fig. 2 (Line G).

1st Position.	2nd Position.	3rd Position.
"Strong spirits only."	"All spirits under 30 u.p."	"Rums exceeding 30 o.p."
"Proof" at 0·32 inch to the left of the starting-point "L."	"30" at 8·32 inches from the starting-point.	"30" at 18·28 inches from the starting-point.
	"20" at 8·36 inches from the starting-point.	"20" at 18·82 inches from the starting-point.
	"10" at 9·34 inches from the starting-point.	"10" at 19·30 inches from the starting-point.
	"0" at 9·77 inches from the starting-point.	"0" at 19·73 inches from the starting-point.

The starting-point and relative value of the arithmetic scale to be used in conjunction with the empirical line F, denoting the weights of spirits in pounds-per-gallon, are as follows :—
Starting-point "75 o.p." Scale divisions $\frac{1}{2}$ inch apart.

34

© B O B Williams Printed22/11/2023 CalcPatents Ed. 1.doc

Farmar FC 7364/1908 rule for ullaging etc

7364. Farmar, F. C. April 3.

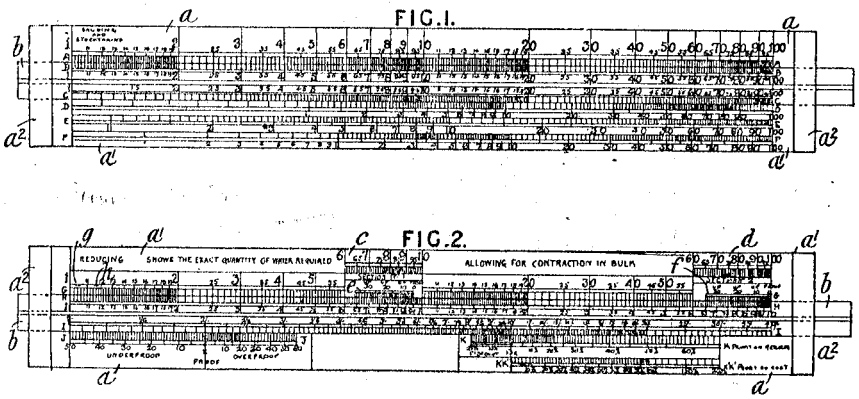

Slide-rules.—Apparatus of the type described in Specification No. 8309, A.D. 1901, for computations relating to the reducing, ullaging, proofing, gauging, blending, &c. of wines and spirits is modified by the provision of scales for gauging oval casks and bottles, for mixing and diluting spirits to given strength, and for certain monetary calculations. The rule consists of two parallel bars a, a^1 jointed together by end pieces a^2 and separated by a movable slide b; on one side of the rule, Fig. 1, are two ordinary logarithmic scales A, B working in connexion with each other and giving the results of ordinary proportion, multiplication, or division. The logarithmic scale C on the lower part of the slide b represents the bung and wet inches of all lying casks, or the length and wet inches of standing casks, and is used in connexion with the scale D to gauge ordinary round casks in the lying position, with the scale E to gauge oval or round casks in the standing position, and with the scale F to gauge all lying oval casks. On the other side of the rule, Fig. 2, the logarithmic scales G, H are for the reduction and contraction valves. The scale G is provided with subsidiary scales e, f, of which the former allows for the direct calculation of the bulk contraction, while the latter does not allow for this contraction, the difference in the reading of the two scales thus giving the extent of the contraction. The divisions in the scales c, d coincide with those of the scale G; on the scale G two groups of dots g, h are placed, the first group g serving to reduce spirits to the strength of 11 o.p., and the group h to the strength of 25 o.p. allowing for contraction. The dots are set in position according to the initial strength of the spirit. The monetary value scale i on the slide B co-operates with the strength scale J to calculate the various values of the spirits. Profit and discount are calculated from the scale K and the additional percentage scale K^1K^1, used in conjunction with the scale I. On the edge of the rule, an altimeter scale is constructed to facilitate bottle gauging, and is used with tables that take account of the shape of the bottle. To gauge the ordinary lying casks, the bung diameter on C is set to 100 on D, and then the percentage of capacity on D appears under the wet inches on C; this percentage is then set to 100 or 10 on A, whereupon the ullage quantity remaining in the cask is given on B under the capacity on A. Other instances of the use of the rule are described in the Specification.

Farmar F C 12717/1912 Discount slide rule with cylinder

12,717. Farmar, F. C. May 30.

FIG. 1.

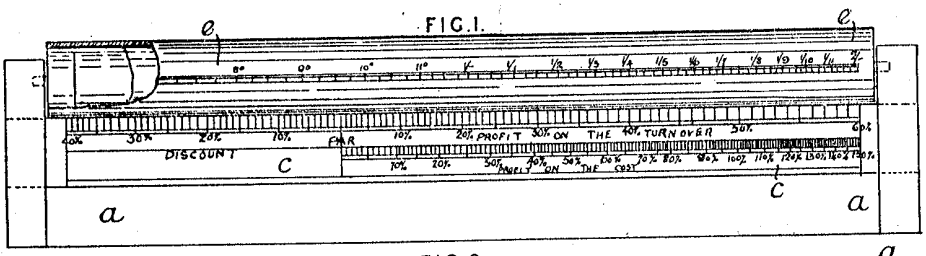

FIG. 3.

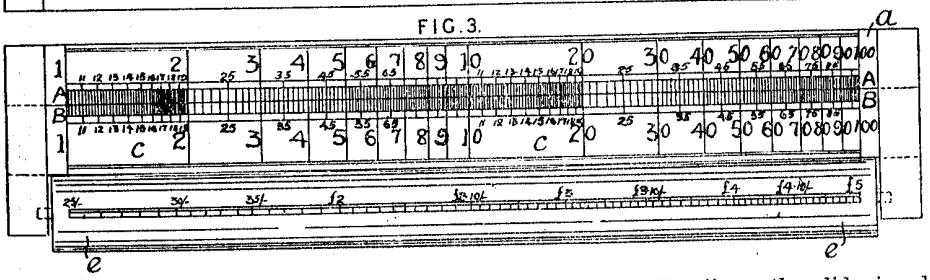

Slide-rules for computations in discount, profit and loss, &c., comprise a rotatable celluloid or other transparent cylinder *e*, provided with a series of logarithmic scales of values parallel to the axis, and an adjustable graduated slide *c*, the cylinder and slide being mounted on a base *a*. On the back of the rule are other scales A, B, Fig. 3, adapted for computations beyond the limits of those for which the cylinder *e* can be utilized. In computing the discount, &c., on a given sum of money, the line marked "Par" on the slide is adjusted to the given sum on one of the scales on the cylinder, and the net sum required after deduction of discount at the given rate, or the given sum increased by the addition of profit at the given rate is read on the cylinder opposite the given rates of discount, profit, &c., marked on the slide. Other computations can be dealt with. A ratchet-device may be fitted to maintain the cylinder in position, and two or more cylinders may be provided in the apparatus.

Picture courtesy Tom Martin



Fassbender F 14200/1898 Mech disc calendar with lunar phases

14,200. Fassbender, F. June 27.

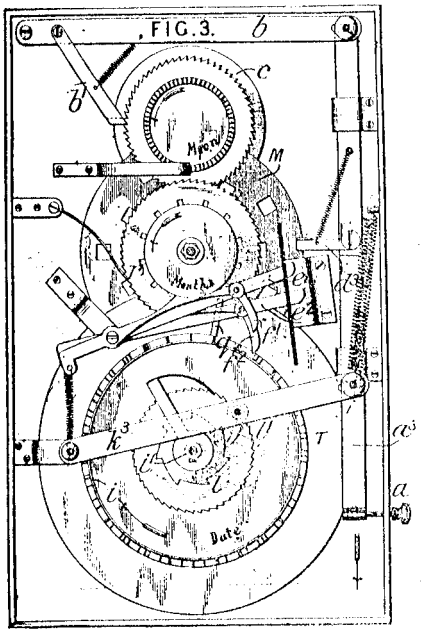

Calendars.—The calendar shows the phase of the moon, the day of the week and of the month, and the month. The phase of the moon is indicated through a circular aperture by the amount shown of one of two equal circles marked eccentrically on the disc *c*. The days of the week are marked on a disc sleeved on the spindle i^1 and connected to a seven-toothed ratchet-wheel *l*. These discs are actuated daily by pawls b^1, l^1 carried by levers *b*, k^3 which receive motion from the sliding rod a^3 on depressing the knob *a* by hand. The days of the month are placed on a large disc T in three concentric circles, marked respectively 1–31, 1–30, and 1–28, and showing through holes on the month disc M, which holes are so arranged as to come into position according to the number of days in the month. The month disc M is turned one twelfth of a revolution for each rotation of the disc T by a pin *q* engaging pins *r*. The disc T is actuated by the engagement of one of three pawls f^1, f^2, f^3 on levers e^1, e^2, e^3 (f^3 and e^3 being concealed behind f^1 and e^1 in Fig. 3), engaging with a corresponding row of teeth on a drum *i*. There are three such rows, having respectively 31, 30, and 28 teeth, and the required lever is forced into position to be engaged by one of three slip pawls or tappets d^3 on the sliding rod a^3 by a sort of triple cam wheel on the axis of the month disc. Thus, in Fig. 3, the lever e^2 and pawl f^2 are in action, and at each daily depression of the knob *a* the drum *i* will be advanced one tooth space ($\frac{1}{31}$, $\frac{1}{30}$, or $\frac{1}{28}$ of a rotation according to the number of the days in the month) until the pin *q* alters the month disc and with it, if necessary, the lever in action.

Fauvel & Collins 23241/1897 Adder £sd

23,241. Fauvel, C. J., and **Collins, N.** Oct. 30.

Receipts, checking and recording.—The apparatus is provided with separate sets of keys a^1, say for pounds, shillings, and pence, and when any key of a set is depressed it acts, through the rocking frame d, d^1, which turns on the same axis b as the keys and carries a toothed sector e, to rotate a pinion e on a spindle e^1 and wind up a spring in the barrel g. Near the end of the stroke the bend i^3 in the slot i rocks a frame h^1, k to bring the driving-wheel j^3 of the register j into gear with a wheel on the spring barrel; at the same time the detent h is withdrawn from a pin h^3 on the barrel, which is then free to rotate until one of a series of helically-

FIG. 2.

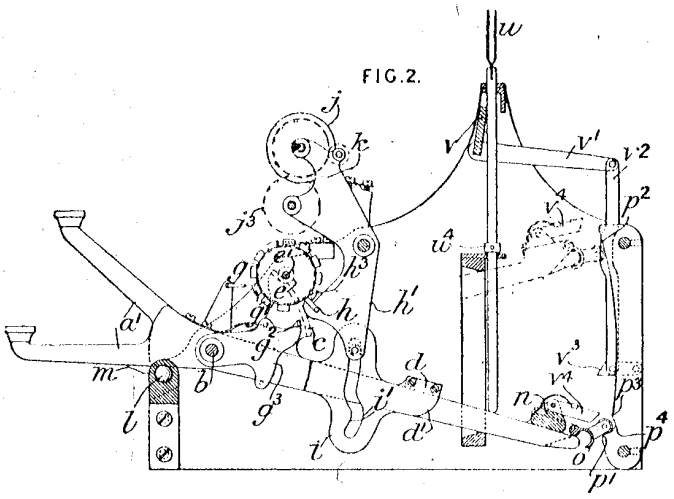

arranged pins g^1 strikes the stop g^2 on the spring detent g^3 carried by the depressed key. The angle through which the barrel is allowed to turn is proportional to the amount marked on the key. As the key returns to normal position, the remainder of the rotation is completed idly. One key only of each set can be depressed at a time as its stem passes between two of a series of balls l or the like in a race m; there is just clearance enough for one stem and no more. When two or more keys of different sets are depressed it is desirable that a slight depression of all the keys but one should be sufficient and that the remaining key alone should require to be fully actuated. For this purpose a channel bar o is pivoted to a cross-bar n which runs right across the machine and is carried by end levers journalled on the axis b. The position of the bar o is governed by a cam surface p^1, p^4, p^3, p^2 so that, as the ends of any of the key levers rise, the bar swings round and locks them all together (see dotted lines). An automatically-reversing pawl engaging a fixed rack is carried by the bar n and ensures a complete stroke in either direction. A separate halfpenny key acting directly on the register is provided. The indicating-tablets u are thrown up by the keys and retained by a catch bar v engaging the collars u^4. This bar is connected, by the lever v^1 and link v^2, to a bevel-ended lever v^3 which is thrown up, as the bar n rises, by the bevelled slip-pawl v^4, the tablets showing the last transaction being thus freed at the beginning of the next registration. The Provisional Specification describes a 'carrying mechanism' for the counter consisting of a cam-actuated pawl carried by one wheel which once in each revolution is thrown into engagement with a ring of teeth on the next. A printing-mechanism is also referred to, consisting of three type-wheels (one for each set of keys) geared to the spring barrels and printing upon a ticket or a ribbon of paper, or both.

Fearn & Martyn 28461/1913 Abacus

28,461. Fearn, W. A. C., and **Martyn, R. O. F.** Dec. 10.

Abacuses.—In apparatus for teaching arithmetic, a box or case is formed in two halves *a* hinged together at *b*, and is furnished in either or both halves with a block *c*, or plate of thin layers c^1, c^2, having apertures or recesses arranged vertically and horizontally in rows of twelve for the reception of marbles, balls, or pegs *e*. The blocks or plates do not extend the whole length of the box, but are cut off in order to provide a receptacle for the balls and pegs. The apertures in each half are adapted to register when the box is closed, so that the balls in the apertures will be gripped and held thereby in their set position; if one half only has a block or plate *c*, the lid or cover is formed so as to engage the balls when the box is closed. A dividing-line, such as a wire or stick *f*, is provided for the purpose of facilitating calculations in the decimal system, and the position of the line *f* may be varied to suit calculations in any other systems. Both balls and pegs may be used, in which case the balls will represent units and the pegs tens of units.

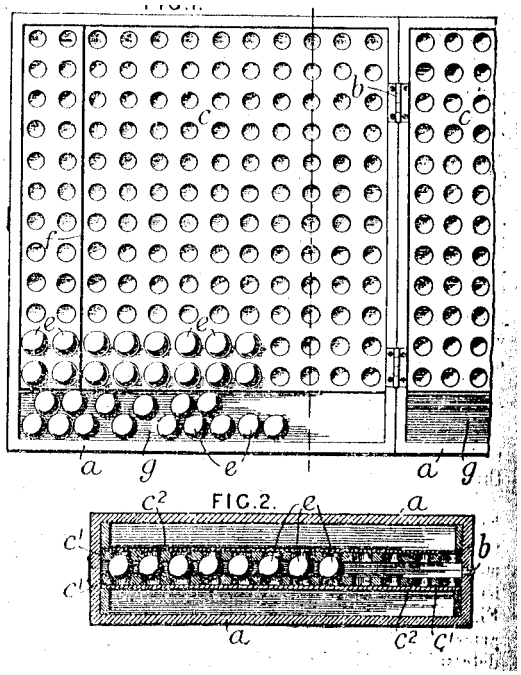

Fellows H W 7421/1908 Device for gear design

7421. Fellows, H. W. April 3.

Calculating-apparatus.—A device for determining various angles and lengths required in turning blanks for bevel-gears comprises a pair of arms 1, 2, one of which is provided with a slot 3 along which an angle-plate 13, guided by studs 14, 15, is adapted to slide with its edge perpendicular to the slot. The stud 15 passes through a slot 19 in a blade 18, adapted to be clamped with either edge passing through the stud, and on the blade slides a cross-bar 28. A pointer 27 slides laterally and longitudinally on the arm 1. The various parts of the device are graduated, the arms 1, 2, when the English system is employed, being each provided with four scales 4 &c., 4^a &c., divided respectively into various fractions of an inch. The scales on the arm 1 start from the central line of the slot 3, and those on the arm 2 start respectively from

0

Felt & Tarrant 19964/1890 The Comptometer

See [7]

19,964. Horn, W. W., [*Felt & Tarrant Manufacturing Co.*]. Dec. 6.

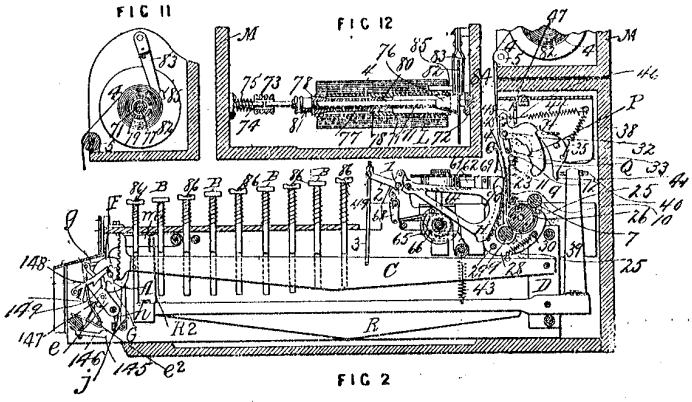

Calculating-apparatus; receipts, checking and recording.—Numbers or sums of money are added together upon numbering-wheels and printed on a paper strip. Fig. 2 shows a longitudinal section of the machine, and Figs. 11 and 12 give detailed views of the paper drum. Rows of keys B operate levers C pivoted at the rear between bearings D and provided in front with toothed arcs which gear with loose pinions F between the number wheels on a shaft A. A disc G fast to each pinion has a pawl gearing with a ratchet-wheel fast to the number wheels. After depression of the keys for a given number, a hand-lever (not shown) is operated and a shaft 145 is rocked in consequence. A web 146 on this shaft connected by links 147 with arms *e* pulls them back from the ratchet-wheels of the number wheels till latches 148 engage lugs 149. Carrying tens takes place when a pin on the units wheel lifts the latch of the tens-wheel arm and allows it to be driven forward by the spring e^2 and gives motion to the tens-wheel by a pawl *g*. A spring limiting-pawl is carried by each arm *e*, and an independent back-stop pawl engages each ratchet-wheel. By turning a flat bar the limiting-pawls are lifted off so that the number wheels can be set to zero. The forward rotation of the number wheels is checked by fingers *m* which come down on them when the keys B strike levers R pivoted below the levers C and connected to the fingers by strings R^1. The arms R have restoring-springs 43. The sums are printed by type-bearing sectors H pivoted on a shaft 1 and provided with lever ends 2 joined by links 3 with the levers C. The paper strip 4 is led from a roll in a box M over a guide-roller 5 between the top and bottom rails 6, 7 of a rocking rectangular frame, then between rollers 8, 9, and back through the frame. The rollers 9 are on arms 25 connected by a spring. The rail 6 bears guide-prongs. Between the rail 7 and a fixed rail a thick sheet of india-rubber is stretched and secured by fastenings 10, 11. The rollers 8, 9 are protected by a hood 28 on rods 29, 30. Hammers P with springs 44 apply the paper to the type by striking the india-rubber when they are released from triggers Q mounted on a shaft 35 and pulled by springs 38 under shoulders on the hammers. The triggers are tripped by tappets 40 at the top of stems 39 rising from the rear ends of the levers R. The action of the springs 44 is limited so that the hammers are not kept in contact with the india-rubber sheet. The hammers are restored to the triggers by a yoke 33 operated from a handle. The type is inked by a wet band 61 on rollers 62 operated from a handle by ratchet and toothed gear 64, 65, 66, 68, 49. The band passes between guides 69. The tension of the record strip is kept by means of an expanding drum and tension arm shown in Figs. 11, 12. The drum L comprises a central spur shaft which is supported at one end in a fixed bearing 72, and at its other end in a yielding bearing consisting of a knurled sleeve 73 keyed to a fixed stud 74 on which is a coiled spring 75 which forces the sleeve over the shaft. On one end of the drum shaft 71, adjacent to the fixed bearing 72, is a cone 76, and a sliding sleeve 77 having a cone 78 at each end is mounted on the drum shaft near its other end. These cones 76 and 78 support a split tube 79 provided with an internal shoulder 80. A portion of the shaft 71 is screwed for a nut by which the sleeve 77 can be forced in the split tube to expand it within the roll of paper 4. The coupling 73 allows removal and replacement of the roll. A disc 82 on the shaft 71 rotates between the prongs of a forked hanger 83 and by friction with the ends 84 drops the fork towards the vertical position so that a lateral finger 85 strokes the paper. For distinction, alternate keys 86 on a row are hollowed.

Felt D E & Tarrant R 20990/1896 ASMD, printing comptometer

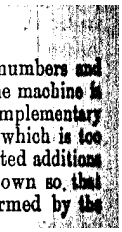

20,990. Felt, D. E., and **Tarrant, R.** Sept. 22.

Calculating-apparatus.—The apparatus is for adding numbers together and printing such numbers and their total, but it is also adapted for subtraction, multiplication, and division. Thus, if the machine is capable of registering 100,000,000, subtraction is performed by adding what are called complementary numbers, which are indicated on the keys and which give the required result, plus a sum which is too high to be registered. Multiplication and division are performed in the usual way by repeated additions and subtractions. The sums to be added are set on the rows of keys A by pressing them down so that they are coupled to a rocking frame C by spring latches A^4. The actual addition is performed by the

ration of an external handle carrying a cam by which most of the operations of the machine are effected. The movement rocks the parallel motion system C^3, C^5, C^7, C^7, C^8, draws down the frame C and with it the coupled keys, offsets A^1 upon which, striking the levers B^1, swing them a distance proportionate to the value of the key, and so through the toothed segments B^* and pinions B^2 advance the

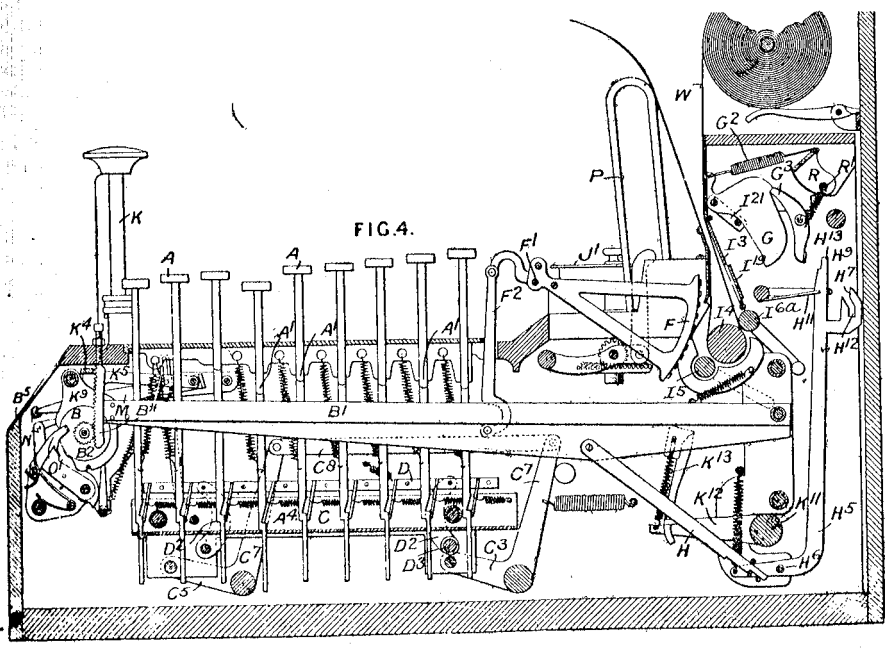

FIG.4.

numbering-wheels B the requisite amount. During the return stroke of the handle, a supplemental frame D, carried by links D^2, is rocked horizontally, so as to disengage the coupled keys. This is effected by a crank on the shaft D^3 temporarily engaging a spring latch. The disengagement may be effected in case of a mistake by manipulating a push-lever not shown, which may also be brought into such a position that the latch for the crank on the shaft D^3 cannot act. In this way repeated additions of the same number may be made when desired, as, for example, in multiplying. The return of the various parts is effected by springs. To ensure a complete stroke of the actuating-handle in either direction, a toothed segment and automatically-reversing pawl are provided. F, F are the type-carrying sectors, which are pivoted at F^1 and connected to the keys B^1 by links F^2, so that they are brought into position for printing at the moment that the impression hammers G are actuated. The printing is effected on a strip W, which is fed forward at each actuation of the machine, or by hand when necessary, by inter-geared rollers I^4, I^{6a}, I^5, the printing-strip being passed between the type and the record strip, and fed in either direction as desired from one roller J^1 to another. At the moment of printing, a slotted link, pivoted to the actuating cam, swings forward a frame I^{21} against the frame I^3, which presses the two folds of the record strip W forward towards the type. Meanwhile the descent of the key levers B^1 has, by means of the slip pawls H, thrown forward the levers H^5 pivoted at H^6, until their ends H^{13} are close to the retaining-pawls G^3 of the impression hammers G. A slotted link actuated by the main cam then rocks the frame I^{11}, whose cross-bar H^9, entering the slots H^{12} of the lugs H^7 on the levers H^5, swings such levers forward, releasing the detents G^3, and allowing the hammers G to spring forward, under the action of their springs G^2, and take an impression through a rubber pad I^{19}. The hammers are replaced in their normal position by the return swing of the frame I^{21}; moreover, the retaining-pawls G^3 are connected by overlapping flanges, so that all hammers to the right of any one whose sector F has been set are released to print a zero even though its corresponding key lever has not been actuated. The springs G^2 are attached to a rocking frame R, adjustable on its pivot R^1 by means of vertical screws not shown. By this means the tension of the springs may be regulated. When the total has to be printed, the push K is pressed down, causing a series of plates K^9 to slide longitudinally, thereby disengaging the pawl and ratchet connection between the pinions B^2 and the numbering-wheels B. At the same time the rectangular shaft K^4 is rotated so as to press pawls K^5 into pin teeth on the wheels B, and hold them firmly in position. The same action rocks the shaft K^{11}, having a series of arms K^{12} connected by springs K^{13} with the levers B^1. The levers are therefore drawn down, rotating the pinions B^2, until stops connected therewith encounter corresponding stops on the wheels B, after which no further motion of the key levers can take place, the springs K^{13} simply stretching. In this way the type-sectors F are placed in positions corresponding to the numbering-wheels B, and the printing-mechanism is actuated by a system of levers &c. operated by the push K. The pawls K^5 are also utilized at the end of each actuation of the apparatus, being connected by the slotted links with the frame C, to exactly position the wheels B

Felt D E 5387/1909 Adder for £sd

5387. Felt, D. E. March 5.

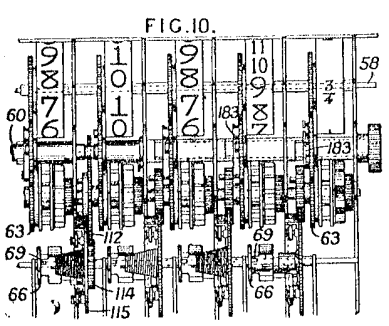

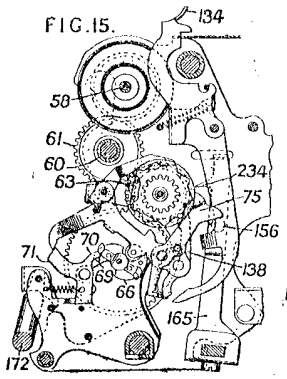

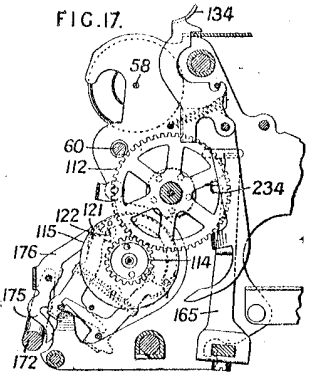

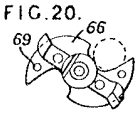

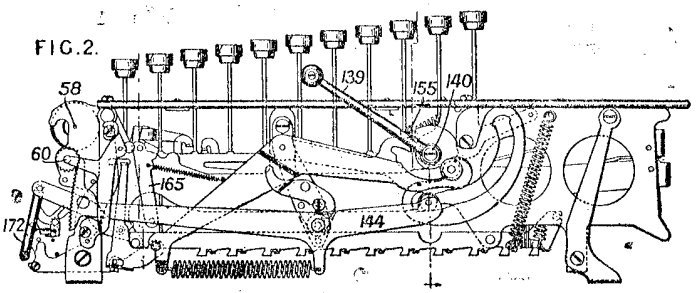

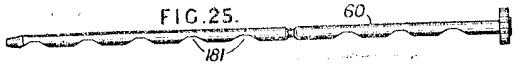

Adding-apparatus for monetary values.—In multiple-bank key-operated machines of the type described particularly in Specification 13,094/04, and also in Specifications 17,136/88, 19,964/90, 20,990/96, and 19,675/00, the totalizing-counter with its associated actuating and transfer mechanism is rearranged for the purpose of adapting the machine to British monetary values and further to enable the machine to be readily cleared to zero.

The numeral wheels are placed upon a separate shaft 58, Fig. 10, and their pinions are driven through intermediate wheels 61 upon the zeroizing-spindle 60 from the receiving-wheels 63 which engage the actuating-segments. Three farthings keys are provided and co-operate with the "even-"number" stop-lever to arrest the actuating-segment when the farthings-wheel has turned through ¼, ½, and ¾ of a revolution respectively; similar arrangements are made for the higher denominations, there being eleven pence keys and a single key for the tens-of-shillings, the corresponding numeral wheel bearing alternating "0" and "1" symbols.

Transfer-mechanism.—In the tens-of-shillings denomination a large spur-wheel 112 drives a pinion 114 attached to the transfer-wheel 115, which is thereby rotated at five times the usual rate to provide for the frequent transfers; a considerably stronger transfer spring is used in the units-of-shillings denomination for the same reason. Since the wheel 115 moves farther than others

More text omitted

Felt D E 9509/1909 Tab calc for £sd

9509. Felt, D. E. April 21.

Adding-apparatus; tabular calculators.—Adding-machines having keyboards arranged for British or other non-decimal currencies, more particularly of the general type described in Specification 13,094/04, in which the totalizing-counter is not movable laterally with respect to the actuating-elements, are provided with a ready-reckoning cylinder showing the amounts obtained by multiplying any desired amount in pence and farthings by 10, 100, 1000, and 10,000 respectively. These results are utilized when the machine is performing the multiplication of some monetary amount by a number consisting of more than one figure by the process of repeated addition. Upon the main casing of the machine is mounted a supplementary casing 30, Fig. 3, which contains a rotatable wooden drum 43, forming a support for the ready-reckoning table, and having a radial slot 47 to receive the ends of the sheet, within which they are secured by means of an adjustable D-shaped rod 48. Of the five sight-openings, that on the right, 49, is never closed, and displays the selected pence and farthing amount; the other openings 50 . . 53 are in line with products of this amount, but to ascertain the reading at any opening it is necessary to withdraw the shutter normally above it by means of a key 60 adapted to be held down by the detent 63 and subsequently released by a key 70 at the side. The interconnexion of these detents is such that opening of any shutter causes the closing of any shutter previously drawn down. When any amount has been registered by repeated depression of a group of keys according to the units digit of the multiplier, the apparatus gives by inspection the corresponding group of keys to select for repeated depression according to the tens digit, and so on.

FIG. 3

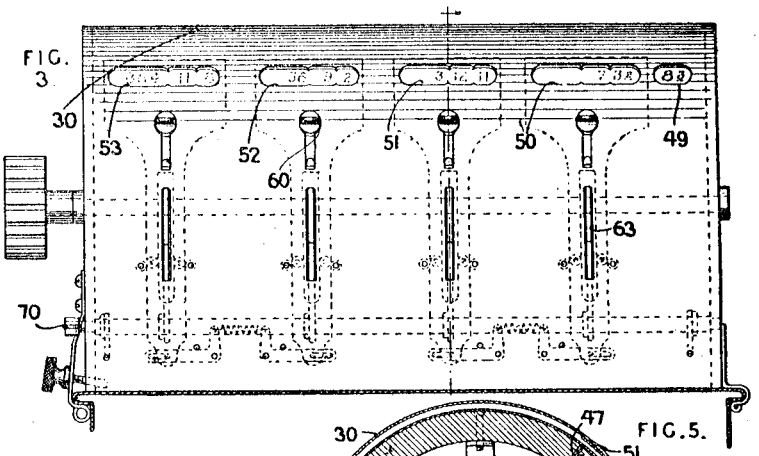

FIG. 5.

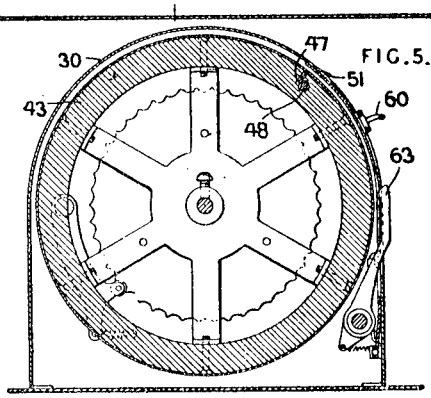

Felt D E 25766/1909 Tab calc

25,766. Felt, D. E. Nov. 8.

FIG. 7.

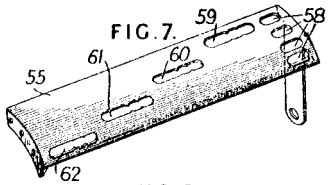

FIG. 3.

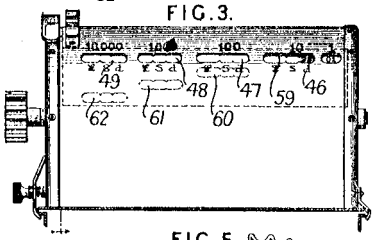

FIG. 5.

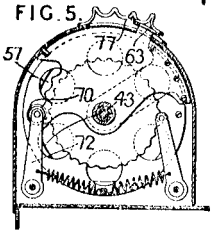

Adding-machines; tabular calculators. — The ready-reckoning cylinder described in Specification 9509/09, with reference more particularly to adding-machines of the type set forth in Specification 5387/09, and adapted to indicate the keys that should be depressed in performing the multiplication of a sum expressed in British or other non-decimal currency by a factor having more than one digit, is provided with a single shutter, instead of a series of shutters, to expose the required series of readings in proper order. The shutter 55, Fig. 7, is pivoted upon the spindle of the ready-reckoning cylinder 43, Fig. 5, and is provided with the series of apertures 58, 59, . . . 62 shown. The apertures 58 are adapted to show the "pence" multiplicand in each of the four positions of the shutter, but the apertures 59, . . . 62, in combination with the apertures 46, . . . 49, Fig. 3, in the fixed casing expose readings which are successively multiples by 10 of the amounts appearing in the apertures to the right. The notched end-plate 57 of the shutter co-operates, in the positioning of the shutter, with a spring-controlled arm 72 having a roller 70. The shutter is moved manually by means of a finger-piece 63, the contour of which is similar to that of the ridges 77 of a fixed plate to facilitate correct adjustment.

Felt D E 1622/1910 Adder

1622. Felt, D. E. Jan. 21.

Adding - apparatus. — In multiple - bank key - operated adding-machines, more particularly of the kind described in Specification 5387/09, mechanism is provided whereby, upon the incomplete depression of and removal of the finger from a numeral key, a bell is rung and the denomination in which the irregularity has occurred is indicated, the parts being of the nature of a full-stroke device. When this happens, the slight upward movement of the key that trips the bell-hammer is prevented from actuating the totalizing-counter, and the keys of all other denominations are locked against depression. To restore the bell-tripping mechanism and make the required actuation of the counter, the key in question may be fully depressed and released, whereupon the keys of the denomination concerned are also locked until a special key is operated to re-set the bell-hammer and the locking-plate. Alternatively, the parts may be re-set by an operation of the zeroizing-handle.

Bell signal for incomplete key - depression. Each denominational segmental actuating rack-bar 40, Fig. 3, as it descends upon the depression of a key, carries with it a full-stroke rack 46, co-operating with a trip-pawl 44, and upon the completion of the key-movement rocks the appropriate "odd" or "even" stop-lever 55, 56, of which an upper hooked end 52 or 53 depresses a forward projection on the trip-pawl in order to disengage it from the full-stroke rack. In this position, the deten 58 rocks downwards so as to hold the paw

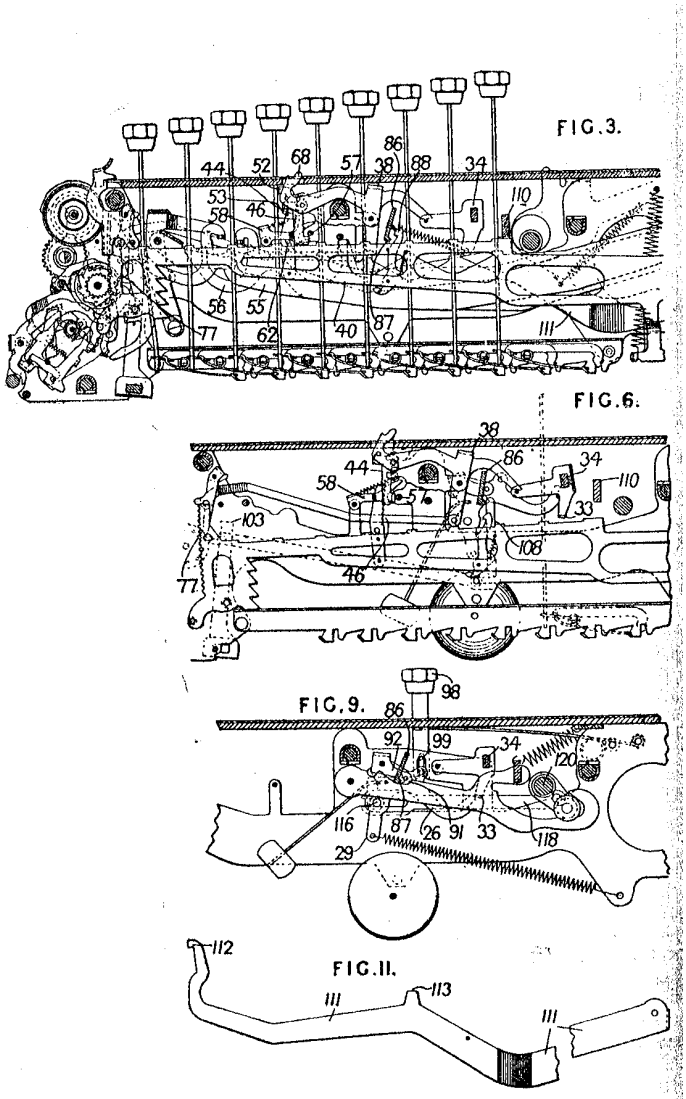

100

More text omitted

Fergusson J C 124245 of 1918 Circ slide rule trig

124,245. Fergusson, J. C. Feb. 21, 1918.

Computing-scales. — A compass, surveying or other instrument for measuring angles, having a ring divided into octants graduated in percentage units, as described in Specifications 25267/98, [*Class* 97, Philosophical instruments], and 22568/12, [*Class* 97 (ii), Surveying &c. instruments] is provided with a movable ring similarly graduated, so that by revolving one ring relatively to the other, addition and subtraction of percentage units may be performed. The invention is described as applied to a compass. The relatively fixed ring 1 graduated in percentage units is surrounded by a movable ring 3 similarly graduated. This outer ring may be provided with a scale of natural percentage cosines 6 as described in Specification 22568/12, and may carry an index arm 7. It is carried by a grooved ring 23 fitted with springs 25. The two rings may be used together as a separate instrument for measuring angles, or both rings may be revolubly mounted on an instrument.

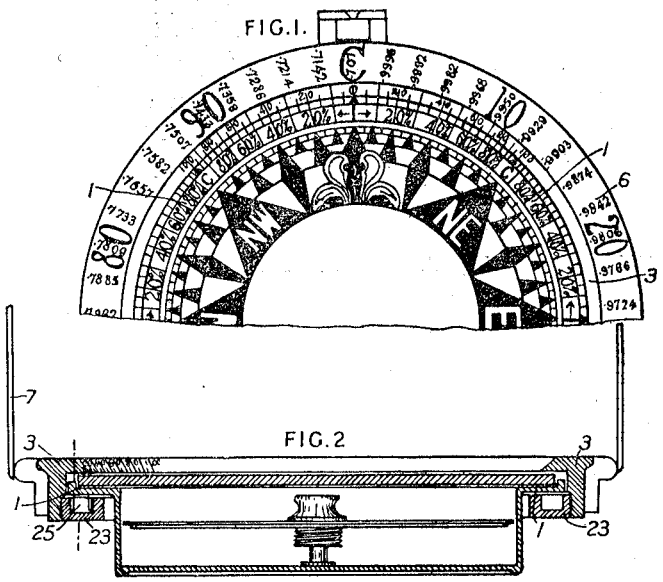

Fincato P 5001/1912 Add, multiply by repetition

5,001. Fincato, P. June 27.

FIG.3.

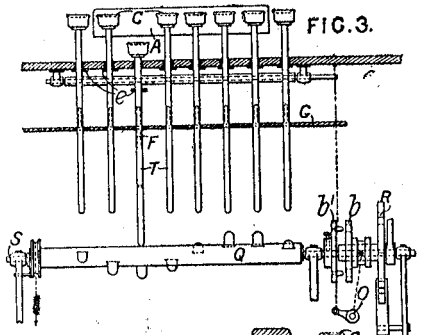

FIG.5.

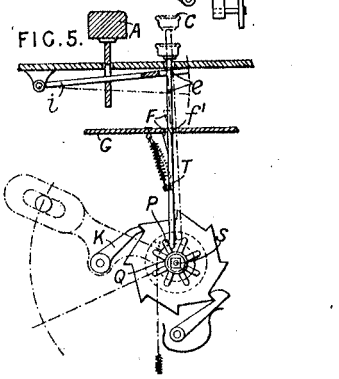

Adding-apparatus; multiplying by repetition.—In a key-set and independently-operated adding-machine, a repeat device for effecting multiplication by repeated addition is provided and is adapted, after the desired number of repetitions have been made, to stop the machine automatically. The device comprises eight special keys C having stems T, each of which is provided with a stop F adapted to hold the depressed key in its lowered position, whereby the lower end of the stem of said key is brought into the path of a corresponding pin or tappet P mounted in a helical manner on a drum Q upon a shaft S which is rotated step-by-step by means of a ratchet-wheel R and pawl K at each complete operation of the machine. The depressed key is returned to its normal position by the tappet engaging the lower end of the key and rocking it to allow the stop F to pass through the holes f^1 in the guide plate G. The key-stems have pins *e* thereon adapted to depress a rack-plate *i* and thereby lower the repeat key A to start the machine. At the same time the rack plate *i* operates an arm *o* to connect up the clutch members *b*, b^1, attached respectively to the ratchet-wheel R and shaft S. When performing simple addition, the clutch is not coupled, but the key A is depressed directly to operate the machine, and the key stem is slotted so as to prevent the depression of the rack plate.

Findlay G 14406/1905 Disk adder bridge scorer

14,406. Findlay, G. July 12.

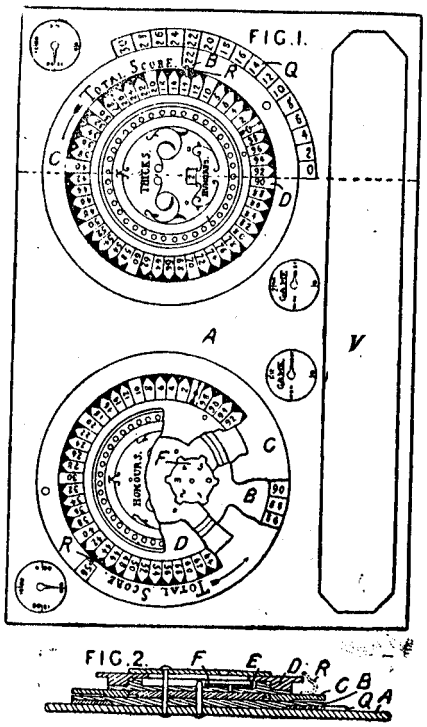

Calculating-apparatus.—Relates to a scorer for the game of Bridge &c. Upon a foundation plate A is fixed a disk B having even numbers up to 98 round its edge. Above the disk B are two rotatable rings C, D, the former being provided with an aperture, through which the numbers on the disk B can be seen, and a pointer R, the latter being numbered round its edge. A rotatable segment Q numbered as shown may also be provided. The ring C is moved till the first score appears at the aperture, and the zero on the ring D is then moved to the pointer R. The next score is recorded by moving the ring C till the pointer R comes opposite the number on the ring D. The sum of the two scores thus appears at the aperture in the ring C. Complete revolutions of the ring D are recorded by a toothed wheel F actuated by a pin E on the disk D. The arrival of the pointer R at the number 30 on the segment Q denotes the conclusion of a game; the segment is then moved forward to indicate the next game. Honours are scored on a similar device mounted on the same base as shown but not provided with the segment Q. Scores over 600 and games are scored on the small dial shown. A writing-surface may also be provided below the dials as shown. According to the Provisional Specification, the ring C and pointer R may be replaced by a peg which is inserted in holes round the disk B.

Flory & Flory 13447/1907 Small adder for £sd

13,447. Flory, T. W., and **Flory, L. G.** June 11.

Calculating-apparatus ; counting-apparatus. — In a style-operated adding-machine, especially adapted for English monetary values, number disks A, B, C,

Fig. 1, are perforated with series of holes a^1 . . . , b^1 . . . , c^1 . . . , which are visible through the circular slots K, L, M of the dial-plate *d* and are provided with series of numbers to represent

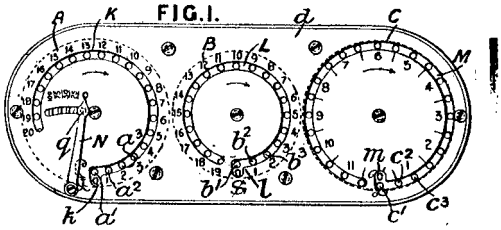

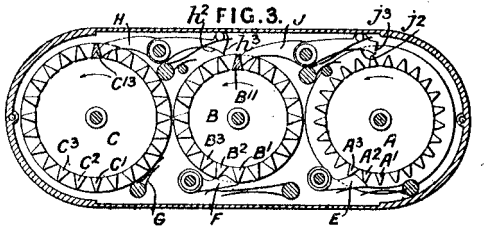

pounds, shillings, and pence, respectively. One of the numbers on each disk is visible through the notches *k*, *l*, *m* in the slots K, L, M, the rest being covered by the dial-plate *d*, which is numbered similarly to the disks. Rings of V-shaped teeth A^1, A^2, A^3 . . . , B^1, B^2, B^3 . . . , C^1, C^2, C^3 . . . Fig. 3, are provided on the back of the disks, corresponding in position with the numbers thereon, one tooth on each of the disks B, C, namely B^{11} and C^{13}, projecting from the plane of the rings so as to operate the double-armed spring-controlled transfer levers J, H which are provided with cam-surfaces j^2, j^3 and h^2, h^3 respectively. At transfer, the surfaces j^2, h^2 rotate the number disks A, B through an angle less than that between two consecutive teeth or numbers, and further rotation is prevented by the teeth coming in contact with the surfaces j^3, h^3. When, however, the teeth B^{11}, C^{13} pass clear of the levers J, H, the spring-pressed jumpers or retaining-pawls E, F complete the rotation of the number disks through the requisite angle. Pounds above twenty-four in number may be shown by the spring pointer N, a pin *q* on which engages in a spiral cam-groove made in the surface of the disk A ; or, if desired, by successive number disks provided with suitable transfer mechanism as in an ordinary counter. In this case, twenty or thirty teeth may be provided, for example on each ring, each series of ten teeth having one transfer tooth ; corresponding numerals are provided.

Fontaine-Moreau, P A, Comte 3327/1857 Local times

2327. Fontaine-Moreau, P. A., Comte de, [a communication]. Sept. 5.

FIG. 1.

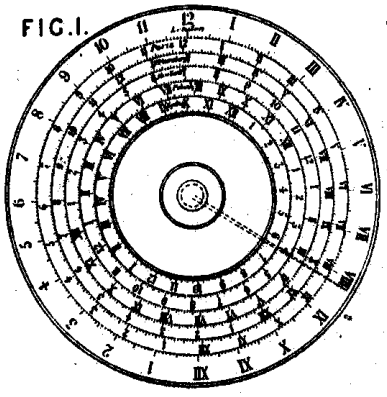

FIG. 4.

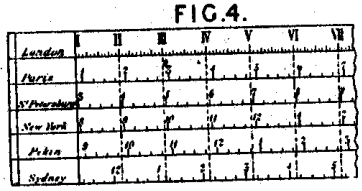

Calculating-apparatus. — The local times at places having different longitudes are compared by means of a dial, shown in Fig. 1, having a number of hour-circles displaced relatively to one another in such a manner that a pointer moving over the dial will indicate the local time at any one place corresponding to that at any other. If the time differs by less than an hour, a single

39

---

hour-circle and a number of minute-circles may be used. A single hour-circle and a rotatable disc having a number of pointers corresponding to the different places may also be used. The hours may also be set out in horizontal lines as shown in Fig. 4 so that a vertical line anywhere gives the comparative local times. The device may be used for railway purposes or for electric telegraphs.

Fearnley J B 863/1881 spiral slide rule

863. Fearnley, J. B. March 1.

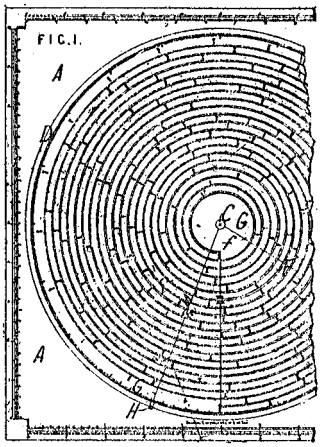

Calculating-apparatus.—Mounted on the centre C on the base-plate A is a disc of metal (or other material) on which is a rim D, conveniently made of a tube with a slit on the outer edge. Another dial G, turning on the centre C, has marked upon it a spiral line divided into a logarithmic scale in such a way that its commencement and end are on a radial line. A wire or thread F is fixed at one end to a ring capable of turning on the pin C, and at the other to the rim D, of the disc. A head or other index *f* slides on the wire F. A similar wire M carrying an index is attached to a ring on C, and to a carriage H, capable of sliding on the rim D, a tongue upon it entering the slot. The outer edge of the dial G is divided into ten parts and sub-divided as may be desired. The linear divisions on the spiral are natural numbers, and the number of the convolutions counting from the commencement of the logarithmic scale represents the first figure of the mantissa of the logarithm. The following figures are found on the outer decimal circle of the dial at the point on the radial line passing from the centre through the natural number. The dials may be flat, conical, or in the form of any other solid of revolution of which the radius increases towards the base. To multiply—place the logarithmic radial line under the fixed wire F, and the index *f* over 100, on the spiral scale. Place the wire M crossing the multiplier on the spiral scale and its index over such multiplier ; then bring the multiplicand on the spiral scale under the thread F, and the product will be found under M at the same distance from the index on M as the multiplicand is from *f*. Division may be performed by an inverse operation to the above. Other calculations may be made, appropriate modifications of the scales being sometimes necessary.

Forster A 23256/1900 Gravet type slide rule for steam engines

23,256. Forster, A. Dec. 20.

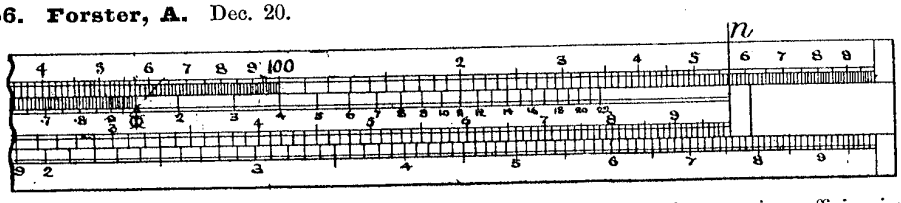

Slide-rules of the Gravet type for computing steam pressures, ratios of expansion, efficiencies, cut-offs, and sizes and ratios of cylinders of steam engines. The divisions of the left-hand upper scale of the slide are marked as decimals to read as "cut-offs" and "efficiencies," and the right-hand upper scale of the slide is divided to read the "number of expansions" to suit any desired expansion curve. To produce the latter scale, the terminal line *n* on the slide is set to read the calculated mean pressures for a given initial pressure and given numbers of expansions, and the numbers of expansion are marked on it against the central line 100 on the bed.

Fortin J E 15961/1895 Planimeter for leather

15,961. Fortin, J. E. Aug. 24. [*Grant of Patent opposed.*]

Calculating apparatus.—Relates to apparatus for measuring the area of pieces of leather the sides of which are irregular, and which may have holes in places. The piece is fed forward over the table 30 by a roller driven from the pulley 32, and whenever a portion is passing under any one of a series of independent discs 20 such disc is rotated and winds up a cord 21, but at other times the disc is held stationary by a friction brake 33. Each cord 21 is connected to a weight 13, the weights being placed in a series of vertical tubes 11 opening into common tubes 5, 1 forming part of the framework, and partially filled with water. In the tube 1 is a float 14 carrying a scale 15. As the water rises in the tubes 11, owing to the weights being more or less wound up, the level in the tube 1, and with it the float, falls and the position of the scale 15 shows the integration of the weight displacements and so the area of the piece. Detail mechanism, for guiding the leather, adjusting the normal height of the water, raising the brakes 33 simultaneously, &c., are described.

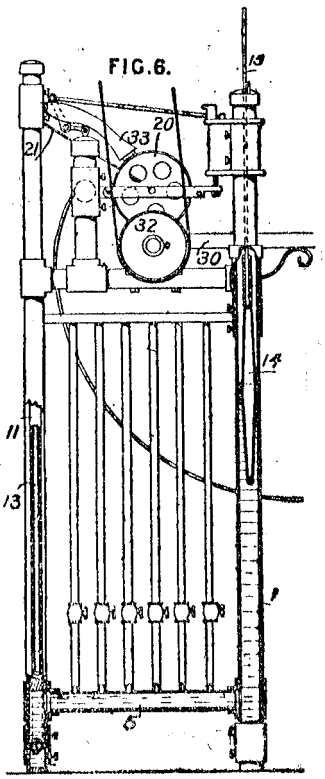

Fossa-Mancini C 1489/1899 Adding machine

1489. Fossa-Mancini, C. March 1.

FIG. 3.

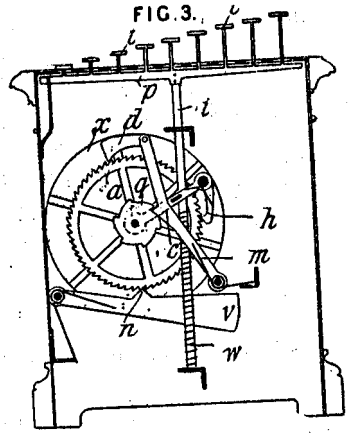

Calculating-apparatus.—Relates to adding-apparatus. A series of numeral discs *x* are advanced by placing a pin between projecting pins at the side of the wheels opposite the number to be added marked on a graduated slot, and moving the pin to the end of the slot; or, in the form shown in Fig. 3, by pressing a numbered key *t*, lowering the bar *p* and rod *i* more or less, and causing the spring pawl *h* to slide over a definite number of teeth of the ratchet-wheel *a*. The return stroke, under the action of the spring *w*, moves the numeral disc forward. In order to carry the tens from one wheel to the next, each is fitted on its left-hand side with a, say, six-toothed cam *q*, and the

REGISTERING &c.

numbers 0–9 are repeated round the discs correspondingly. The cam *q* belongs to the wheel to the right of the wheel *x* shown. As the cam rotates, it lifts the lever *c*, carrying a pawl *d*, against the action of the spring *m*, and then suddenly lets it go, advancing the wheel *x* one unit. A weighted spring detent *v* with V-shaped tooth *n* controls the movements of the ratchet-wheel *x*.

Fossa-Mancini (1900) Martin p 129[7]

This is an eight-place adding machine with stylus setting. The individual numeral wheels are printed with four groups of the digits 0 to 9. Entering of the individual values occurs in the usual way by pulling down the respective numeral wheels of the number to be added until encountering a positive stop. The respective sums of the entered values appear in windows in front of the machine. The last numeral wheel to the left causes a bell to sound with every quarter revolution as a sign that the capacity of the machine has been exceeded.

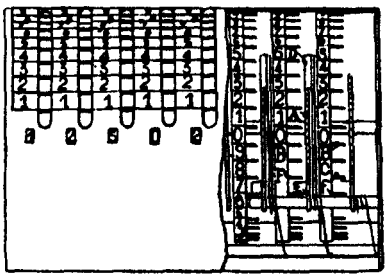

Figure 100

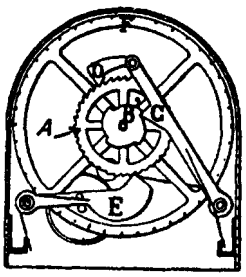

Figure 101

Fowler G B 13012/1890 Adder

13,012. Fowler, G. B. Aug. 19.

FIG. 1.

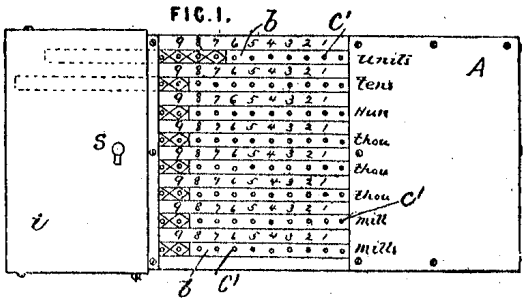

Calculating-apparatus.—Relates to adding-machines. A grooved baseboard carries a series of slides *b* having pips c^1 on the upper side and the numerals twice over on the underside. The ridges between the grooves are also marked with the numerals at the same distance apart as the pips. A style is inserted into the pip opposite the number to be added, and the slides are moved to the right or left till the style is stopped by a covering-plate A or *i*, which partly hides the slides. The direction is determined by the pips used, those on the left half being coloured differently from those on the right. When a slide is moved to the left one has to be carried forward to the next slide. The sum is read from beneath through apertures in the right part of the baseboard. A hinged flap with nipples under the cover *i* can be pressed down and locked by a knob *s*, so as to fix the slides and preserve the result of an operation.

Picture

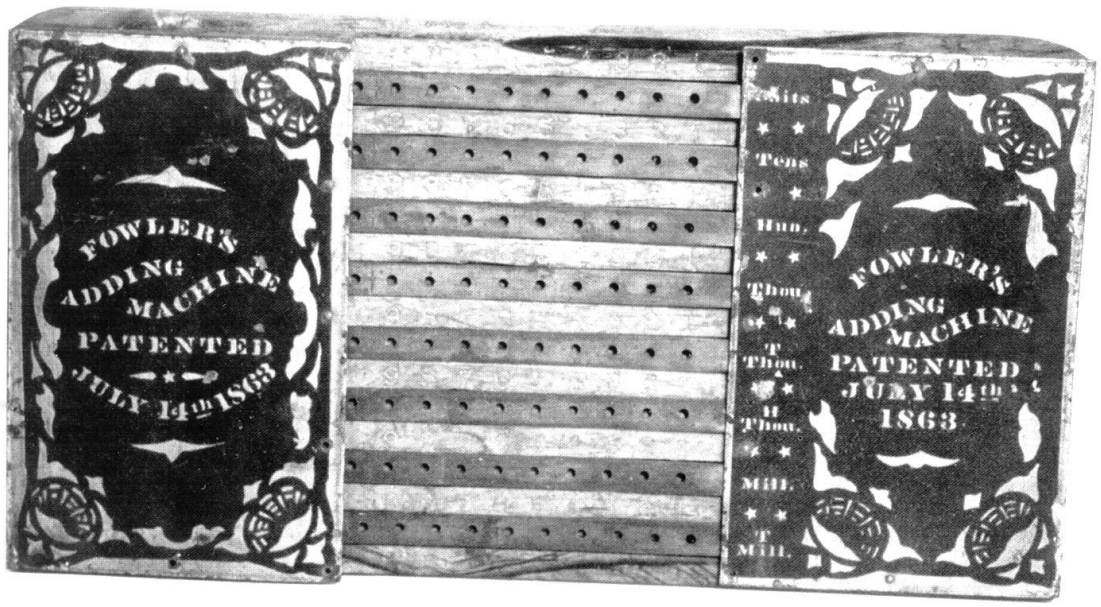

Fowler W H 5528/1910 Circular slide rule

5528. Fowler, W. H. March 5.

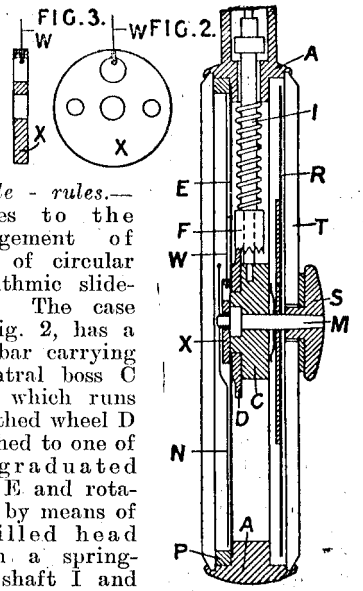

Slide - rules.— Relates to the arrangement of parts of circular logarithmic slide-rules. The case A, Fig. 2, has a cross-bar carrying a central boss C upon which runs a toothed wheel D attached to one of the graduated dials E and rotatable by means of a milled head upon a spring-held shaft I and of a crown-wheel F, the shaft having a projection for engagement with projections upon the ends of a swivel bow, whereby it is kept in place. The dial is retained by a washer X secured to the central boss, and by an annular ring P slightly overlapping its edge. A fixed radial fiducial line is provided by a filament W, Fig. 3, one end of which is secured within an aperture of the washer, as shown, the outer end being attached to the circular case in such a manner that the filament lies close to the face of the dial, thereby avoiding parallax. A radial pointer N upon this face and a second graduated dial R upon the other face are secured to a central shaft M which is rotatable by means of a knob S, these parts being maintained in position by a collar, spring, and washer. Both the glass faces of the instrument are held by turning the bevelled edges of the casing over the bevelled edges of the glass, whereby separate bezels are dispensed with.

Fowler W H & H 20416/1912 Watch type slide rule

20,416. Fowler, W. H., and **Fowler, H.** Sept. 7.

Slide-rules of the watch form are adapted for more convenient assembling of the parts. A movable scale O is attached to a pinion K set by a spindle M and moves behind a glass dial Q fixed to a ring J. A sleeve D carries a disk I with an engraved pointer and a pinion E for setting by a second radial spindle. The feet of the two spindles are stepped in a boss C mounted on the sleeve D but held fast by the spindles. The parts are held by studs R, S in the sleeve.

FIG. 2.

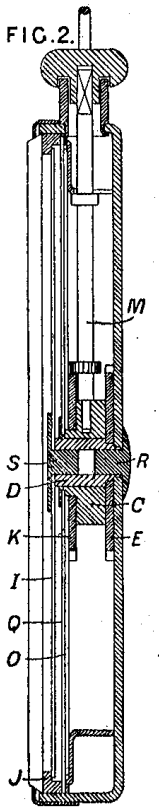

Fowler W H & H 3638/1914 Circular slide rule

3638. Fowler, W. H., and **Fowler, H.** Feb. 12.

Slide-rules.—In a circular rule, the operating-spindles of the dials or pointers are mounted in a fixed boss, and each spindle is provided with a spring and bearing-piece or spring bearing-piece so as to facilitate the setting of the dials or pointers, whereby overthrow or incorrect setting is avoided. In one arrangement, shown in Fig. 1, the spindles A, B are provided with springs L, M, which bear at one end on the casing E and at the other end on the bearing-piece N so that the springs, which are slightly coiled up on rotation of the spindles, have no tendency to turn the dials after the setting. The springs offer a frictional resistance to the turning of the spindles and thereby secure a dead-beat movement of the dials. The pinions J, K are kept in engagement with the driving-wheels of the dials by means of the springs. Various arrangements are described for producing the frictional resistance.

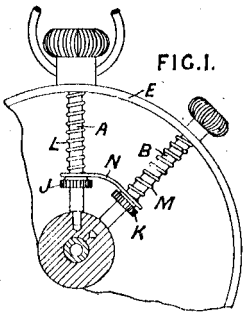

See [18]

Fowler W H & H 15990/1914 Circular slide rule

15,990. Fowler, W. H., and **Fowler, H.** July 4.

Slide-rules.—Circular rules consist of a rotary transparent disk *e* bearing a radial line, a stationary annular scale-bearing member *o*, and a rotary scale-bearing disk *f*, all mounted within a casing *a*. A bezel *b*, secured by screws *d*, carries the transparent disk, and by means of a roughened edge enables it to be rotated. The movable scale member *f* is in position between a fixed ring *m* and the stationary scale, being secured for rotation to a metal disk *g* upon a central spindle *h* with a turn-buckle *j*, an elastic washer *k* securing a dead-beat movement. In a modified construction, the stationary scale-bearing annulus is replaced by a fixed transparent ring bearing a radial line.

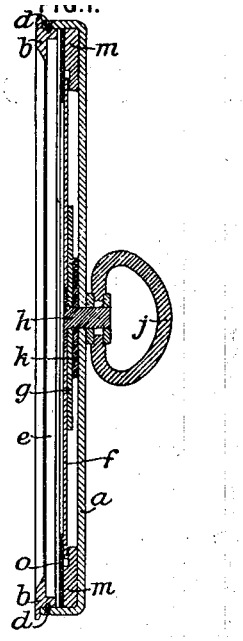

Frampton E 14358/1892 Spiral slide rule

14,358. Frampton, E. Aug. 9.

Calculating-apparatus. — A simple form of apparatus is shown in Fig. 1 consisting of a disc on which are a number of equidistant concentric circles similarly graduated, so that the number of divisions on each is proportional to the diameter. Outside these is a circle graduated in hours, and outside the latter two more graduated in lbs., the outer having 112 divisions and the inner one 40 subdivided into ozs. About the centre of the disc is pivoted

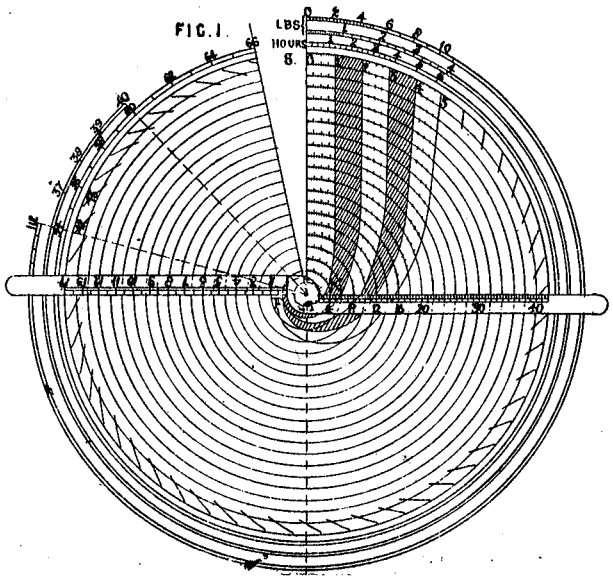

an arm, one edge of which is divided to correspond with the series of circles, while the other is divided into 26 parts, each of which represents a half-penny. Wages at various rates can easily be found by this apparatus, and also totals at various prices per lb. Another apparatus is shown in Fig. 3 in which a disc A, rotated by a handle E, operates indicating-mechanisms O, P which are movable along screws H, I. In another form of apparatus, the disc is rotated by the finger and drives the indicator by worm gear.

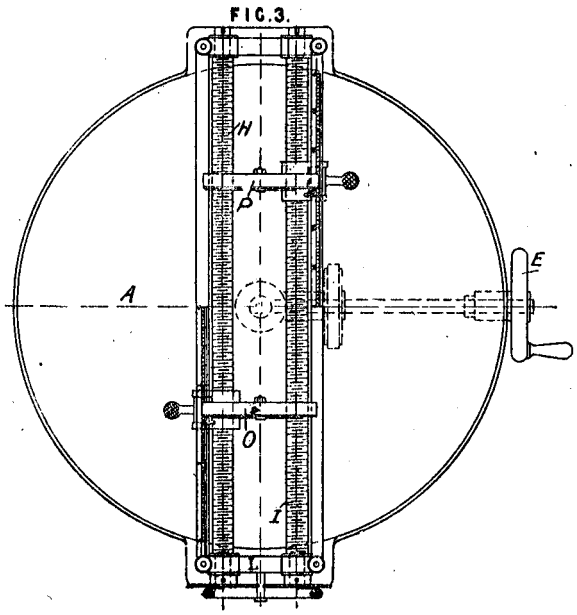

Franke A 9997/1897 Adder printer £sd

9997. Franke, A. April 21. *Drawings to Specification.*

Receipts, checking and recording. — The pence, shillings, and various pounds wheels are all of the same size and divided on the peripheries into 60 equal divisions. The pence wheel is marked 0–11 five times, and actuates the shillings wheel five times in each revolution. The shillings wheel is marked 0–19 three times, and actuates the units of pounds wheel three times in each revolution. The pounds wheels are all marked 0–9 six times, and the next higher in denomination is moved one step six times during a revolution of the lower.

Franke A 10170/1897 Adder printer £sd

10,170. Franke, A. April 23.

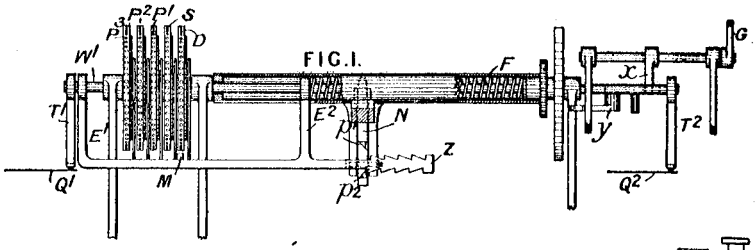

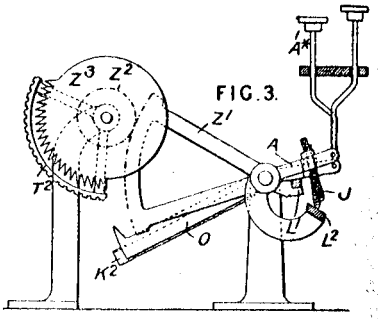

Receipts, checking and recording.—One of the counting-wheels D, S, P^1, P^2, P^3 and the duplicate type-sectors T^1, T^2 are set at each operation of a key A* by a pin J (the length of which corresponds to the amount marked on the key) striking the frame L^2 and so operating the gear Z^1, Z^2 to rotate the shaft W^1. The type-sectors are fixed on the shaft W^1, while the counting-wheels are actuated by a pawl M on the frame E^1, E^2, also mounted upon it. The movement of any key lever A also acts on a frame L^1, bringing the retaining-pawl O into gear with a ratchet Z^3, and taking an impression on the strips Q^1, Q^2 by means of platens K^2. When the number of pence has been printed and registered, the shaft W^1, together with its attached sectors and frame E^1, E^2 with the pawl M, are moved to the left by a spring F so as to be in position to print and register shillings, and a similar movement takes place after each actuation. This movement is controlled by a spring escapement lever N rocked by a cam so as to bring its teeth p^1, p^2 alternately into engagement with the upper and lower teeth of the rack Z respectively. When a complete amount has been printed, the carriage is swung back again by a system of levers x, y actuated by a handle G. The counting-wheels are all divided into sixty equal spaces on their peripheries, the pence wheel being marked 1–12 five times, the shillings 1–20 three times, and the pounds 1–10 six times over. The pence wheel carries to the shillings five times in a revolution, and the others correspondingly.

Fregoso T 23275/1902 Solve triangles

23,275. Fregoso, T. Oct. 24.

Calculating - apparatus. — An instrument for solving right-angled and other triangles in connection with surveying and the like has a rectangular frame A with graduations B, B', a fixed quadrant C, and an adjustable protractor G. The quadrant and protractor have each two scales with verniers which are carried by two graduated rules D, H, turning on pivots at the centres of curvature

FIG. 1.

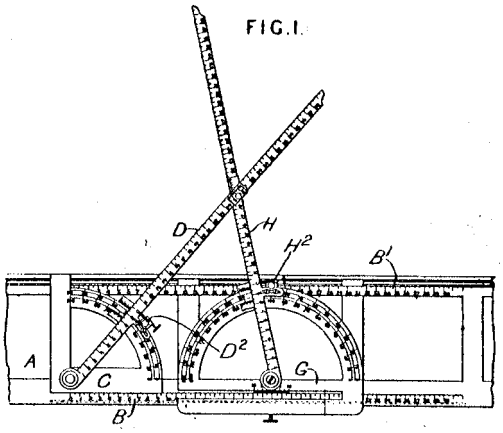

of the circular scales. Each rule carries a clamping-screw D^2, H^2 and a vernier. The protractor G may be adjusted by a rack and pinion. In determining the departure and latitude or rectangular co-ordinates from a distance and bearing, the rule H is placed at right-angles to the scale B.

French & Frederick 11464/1910 Spherical trig

11,464. French, W., and **Frederick, C. W.** July 1, 1909. [*Convention date*].

FIG. 1.

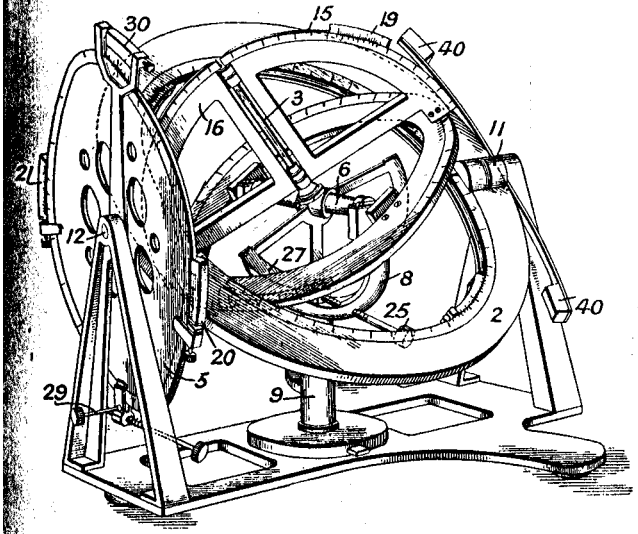

FIG. 8.

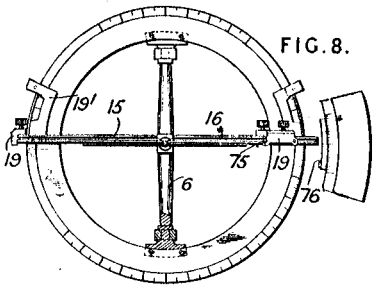

FIG. 14.

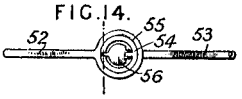

Spherical-trigonometry calculators. — Relates to improvements in means for solving directly the problems of two and three spherical triangles in finding a ship's position and for solving other spherical problems. The apparatus consists of a number of graduated circles mounted concentrically, the altitude quadrants 15, 16 hinging on a spindle 3 carried at right-angles by an axis 6, around which swings an azimuth circle which is borne on a stirrup 8 supported on a standard 9. A declination circle 2, preferably in two parts, is pivoted on bearings 11, 12 to standards on the frame, verniers 20, 21 being fitted to arms attached in the plane of the halves of the declination circle to work on a graduated circle 5, which can be fixed by a clamp 29 with a slow-motion attachment. The circle 5 has a vernier 30 and is graduated on one face for right ascension and on the other for longitude. Slow-motion clamps are fitted to the verniers 20, 21. Verniers 19, 19[1], Fig. 8, are fitted on the altitude and azimuth circles, both with clamps and preferably with interlocking grooves and pins 75, 76 to facilitate exact operation. A web 27 with a counterweight is fitted to the axis 6 and plays between a pair of clamping-screws 25, which permit fine adjustment. Counterweights 40 are fitted to the declination circles. For setting or reading altitudes below the horizon, a suitable separate curved arc can be clamped on; and for measuring arcs a spherical compass is employed consisting of curved arms 52, 53, one with a ring 55 to slide over a split ring 54 in the other, which has a pivoted tongue 56 with a projection to wedge in the slot and lock the arcs 52, 53 at any angle.

Frere R T 21832/1903 Sun dial

21,832. Frere, R. T. Oct. 10.

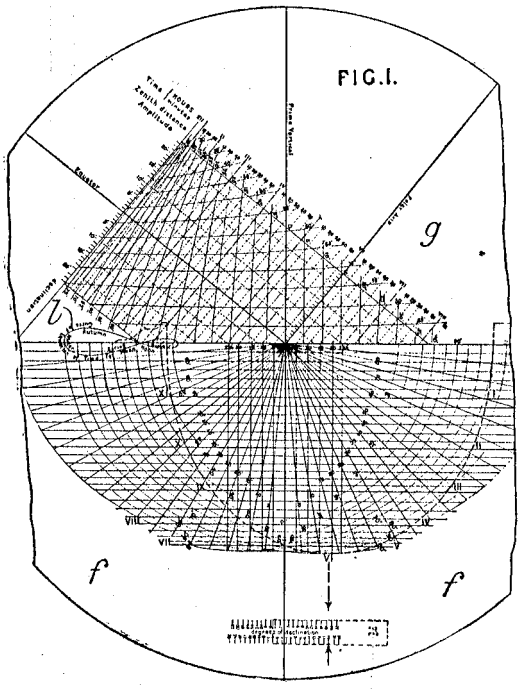

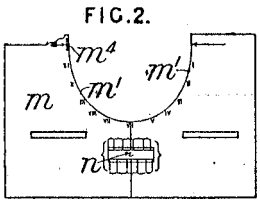

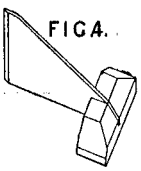

Calculating-apparatus.—A sun-dial or instrument for ascertaining solar angles, time, and dates of the calendar is described. The construction of the instrument assumes that a cylinder having its axis parallel to that of the earth is graduated by four sets of lines, namely, circumferences, generatrices, the traces of vertical planes through the zenith, and the traces of inverted cones on a vertical axis. The circumferences mark off declinations, the generatrices the time of day, and the traces azimuths of amplitude and zenith distances, and they are assumed to be read by the intersection of a vertical plane through the sun. The instrument consists of a dial-plate which shows a plan *f* of half this cylinder when divided by the meridian plane, and an elevation *g* on the meridian plane, together with a sliding setting-plate *m*, Fig. 2, and a style, Fig. 4, having a vertical edge. The plans of the circumference lines are omitted from the dial-plate, but the setting-plate presents by its curved edge m^1 a movable plan which is put to suit the daily declination of the sun by means of graduations at a slot *n*. A further adjustment to suit the equation of time is made by means of noon-graduations m^4 and a curve *l* on the dial-plate. For afternoon use as a sundial, the setting-plate must be put on the other side of the centre-line and the instrument turned through a semicircle.

Freschl A 28128/1908 Planimeter

28,128. Evans, W. E., [*Freschl, A.*]. Dec. 24.

Planimeters.—In an instrument of the polar type, the fixed centre of movement is a weight 5, and

the arm 6 pivoted thereto is shaped as shown and carries a frame 7 in which the integrating-wheel 8 is journaled. The member connecting this frame with the tracing-point 10 consists of a hollow tube 9, through which passes the prolonged spindle 11 of the wheel, actuating a counter 12 immediately adjacent to the tracing-point. In the arrangement shown, a bevel-gear 19 is employed to drive the

FIG.1.

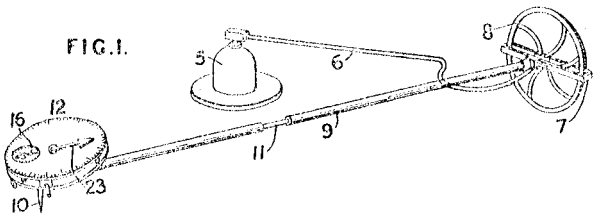

FIG.2.

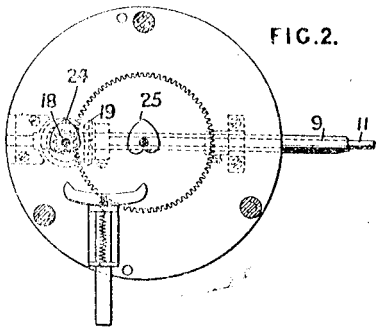

spindle 18 of the 'square inches' hand 16, from which spur gearing conveys the movement to the 'square feet' hand 23, suitably graduated dials being provided. Heart-cams 24, 25 are attached to the hands and co-operate with a spring-controlled push-piece for zeroizing. In another form of counter, co-axial edge numbering-wheels may be employed.

Frichette L 16592/1903 Scales for roof rafters

16,592. Frichette, L. July 28.

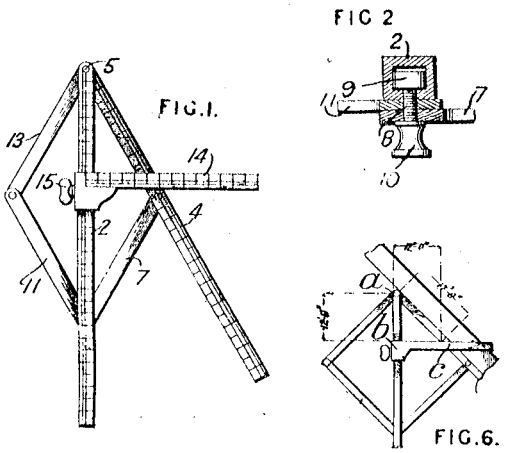

Calculating - apparatus.—A tool applicable for setting-out roof rafters consists of a central graduated leg 2, Fig. 1, to which a graduated scale 4 is pivoted at the point 5. The leg 2 is grooved as shown in Fig. 2 to receive the head 9 of a bolt 8 furnished with a thumb-nut 10. Two bars 7, 11 are pivoted on the pin 8, the bar 7 being also pivoted to the arm 4, and the bar 11 to a bar 13 which is pivoted to the leg 2 at the point 5. A graduated sliding arm 14 is secured to the central leg by a thumb-screw 15. The bevels of a roof strut or rafter can be marked in the manner shown in Fig. 6. If *a b* represents the rise of the roof, and *b c* half the span, *a c* gives the length of the rafter.

Froom G R 692/1899 Abacus for sterling

692. Froom, G. B. Jan. 11.

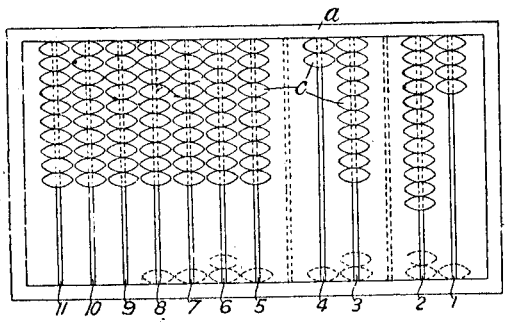

Calculating-apparatus.—Relates to an abacus. A frame *a* carries cross-wires 1—11 on which slide buttons or beads *c*. The wire 1 carries 4 buttons for farthings, 2 carries 12 buttons for pence, 3 and 4 having respectively 10 and 2 buttons for shillings, while the remainder are all provided with 10

197

buttons. Blank spaces or wires separate the shillings from the pence and pounds. The buttons shown in dotted lines represent a sum of £1,121 12*s*. 2¼*d*.

pumps draw water from a tank *a* by the pipes *g*, and force it through pipes *h* into a pressure chamber *b*, whence it returns through a pressure-adjusting device *c*, shown enlarged in Fig. 3, and

FIG.3. FIG.2.

Frost L L 1689/1903 Tally

1689. Frost, L. L. Jan. 23.

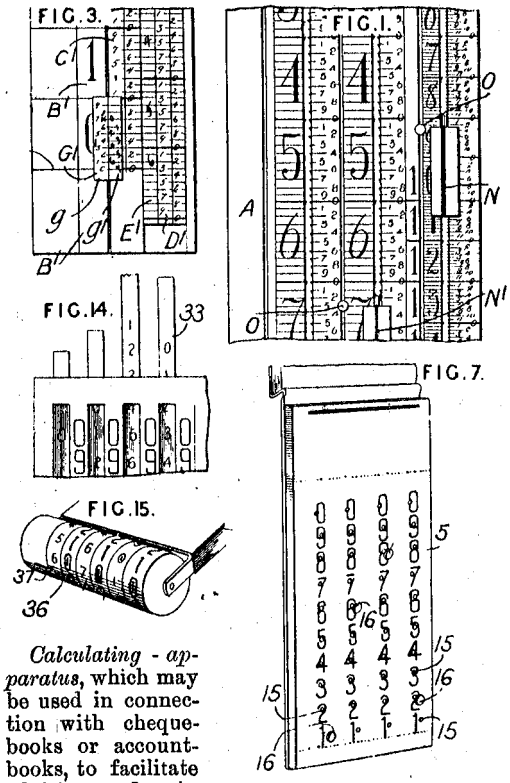

Calculating - apparatus, which may be used in connection with cheque-books or account-books, to facilitate addition and subtraction and to indicate the state of an account. Fig. 1 shows a portion of the device in one of its forms. A board A is formed with grooves in which slide indicators O, N, the board between the grooves being marked with columns of figures. The large figures in the column to the left represent thousands of pounds, and the small figures beside them indicate hundreds. The next two columns indicate tens of pounds and pounds, and the columns to the right show shillings and pence. The indicators O, as they stand, show the amount standing to the credit of the account to be sixty-three pounds eight and threepence. Assuming that nineteen pounds one and fivepence is withdrawn, the operator first moves the slide N up to indicate seven and threepence, and then moves it further through five divisions to subtract the pence, five clicks being heard as a pawl on the slide N passes over five ratchet teeth in the groove. The nineteen pounds are next subtracted by moving up the slide N^1 to fifty-three pounds and then through a further space while nine clicks are heard. The position of the slides N, N^1 now shows that forty-four pounds six and tenpence is the amount remaining to the credit of the account. If one of the indicators N passes in the operation to the top of the column and back through zero at the bottom, a unit must be carried on to the next column. Fig. 3 shows another form of the device, arranged for use with decimal figures. The figures in the columns B^1, C^1 are permanent, as are those in the two right-hand columns of the sliding strip D^1. The figures in the column E^1 have to be written in before each operation. The sliding plate G^1 carries two sets of figures; those in the column *g* are permanent, and those in the column g^1 are written in. In a modification of this form, there are three movable strips D^1 and three sliding plates G^1. Fig. 7 shows a form of the device bound up as part of a cheque-book or the like. In this case, pegs 16 are placed in holes 15 in the tablet 5 marked with columns of numerals. On the back of the tablet numerals are marked in the reverse order, and from the projecting ends of the pegs the state of the account can be ascertained. If the account is opened with the even sum of ten thousand dollars, the figures in the columns shown in Fig. 7 are all that are required. If, on the other hand, any other amount is paid in, figures are written in by hand alongside the permanent figures. For six thousand dollars, for instance, 0 would be written opposite 6 in the left-hand column, 1 opposite 7, and so on. In a modification of this device, the supplementary numbers are not written but are marked on blocks which slide in grooves between the fixed numbers. Instead of pegs, indicating-pieces are used, which slide in narrow slots intersecting the columns of fixed numbers. In the device shown in Fig. 14, there are four columns of fixed numerals, and four slides 33 bearing numerals in the reverse order. Fig. 15 shows an apparatus on the same principle in a circular form for mounting on a cheque-book. Rings 36 carry the main set of numerals and rings 37 the subsidiary numerals in reverse order. Another form of device is described, which is similar in action to that shown in Fig. 1 but is provided with means for carrying forward one column to the next in order. This is effected by a bar sliding in a slot in the higher column and having an arm crossing the top of the lower column. The bar works below the indicator; its motion is limited to one degree of the scale.

290.

© B O B Williams Printed22/11/2023 CalcPatents Ed. 1.doc

Frydmane J 10310/1900 Adder printer

10,310. Frydmane, J. June 5.

Receipts, checking and recording; calculating apparatus.—In a registering and integrating appa ratus for registering monetary transactions, tw automatic sectors *e*, five operating-sectors *f*, tw operating-sectors *g*, and a distributing-sector *h* ar mounted on a fixed spindle *a* supported in sid frames *b*, *c*, and *d*. The sectors are notched, on wall of each notch being shaped like a finger-nail The notches on each of the sectors *e* and *f* excep the last two have, at the bottom, engraved &c numerals. The notches on each of the sectors *g* are, with the exception of the last three, provided with abbreviations indicating, for example, the kind of goods to be debited, the notches of the second sector being provided with the number or initials of the salesman. The notches of the sectors *h* bear abbreviations of the transactions, such as "Delivered," "Credit Sale," "Purchase of "Merchandise," &c. The sectors *e* and *f* carry toothed sectors to engage with toothed wheels forming part of the adding-device. Each sector carries another sector *j*, carrying a curved plate *l* having a flange on the edge of which corresponding signs are engraved. The sectors are connected by tubes to sectors *m*, *n*, *o*, and *p* having similar signs on their peripheries and adapted to print double tickets. A transverse plate *r* serves as an abut ment for the operator's finger when manipulating the sectors *f*, *g*, and *h*. A bar *s*, below this plate, is carried by levers *t* oscillating on a shaft *u* and having a roller *v* engaging a cam *w* on a shaft *x*. This bar ensures alignment of the sectors during printing. The levers *t* are connected by a cross piece *y* carrying spring pushers *z* holding paw against the sectors. Each double ticket prin has a main part and a counterfoil separated b line of perforations, and is drawn from a c board strip 5 unwound from a bobbin, loo

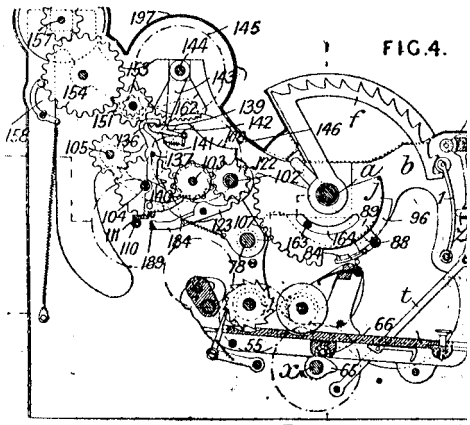

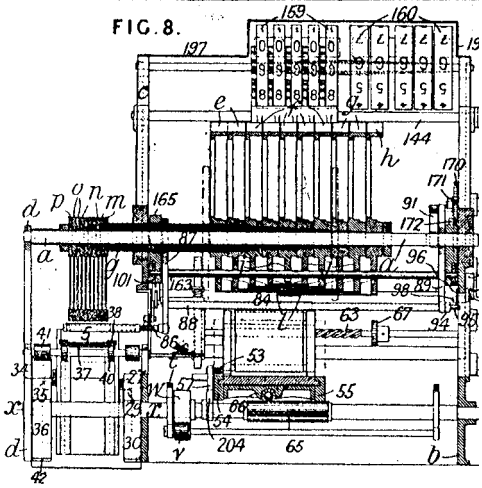

mounted on a shaft, and passing through a passa and between two pairs of feed-rollers, two of t rollers being covered with india-rubber and acti as pressure rollers. The other rollers are inflexib and have projecting parts at their ends to ca the feed; one projecting part for feeding t main part of the strip is longer than the other feeding the counterfoil. A perforator and a nu bering and dating device are arranged between t two pairs of rollers. The perforator consists of cross piece against which the cardboard is press by a plate with perforating-points and provid with a pin engaging a rotating grooved cam gear to one of the rollers. The numbering and dati device is operated by a cam geared to one of t feed-rollers and engaging a pin attached to t frame of the printing-discs, the final upward mov ment causing the alteration of the number and t inking of the discs. The printed strip pass through a funnel-shaped piece, attached to a cro piece, over a cutting-blade operated by a lever

156

Frydmane & Chambon 1109/1904 cash register and 1110/1904

1109. Soc. Anon. des Appareils de Controle et de Comptabilite Automatique, Frydmane, J., and **Chambon, L.** Sept. 25, A.D. 1903, [*date applied for under Patents Act, A.D. 1901*].

Receipts, checking and recording.—A spool-carrying drawer for cash and other registering-appliances is shown in plan in Fig. 1, and in longitudinal section in Fig. 3. The drawer is opened automatically and cannot be closed when the roll of paper *a* has come to an end, or when the paper has broken. The checking or registering appliance is only operated when its operation corresponds to the delivery of a ticket. The paper band passes through the slot *m* to an apparatus of the kind described in Specification No. 10,310, A.D. 1900. The bent lever *s* pressed by the spring *w* bears upon the band opposite the hole *v* formed in the base near to the slot *m*. The latch *q* engages with the lever *s*. When the band is exhausted or torn, the lever *s* rocks and releases the latch *q*; the drawer is opened and the stop a^1 on the drawer withdrawn from the pivoted lever b^1. The rod e^1 is then shot by the spring f^1 to lock the lever i^1 of the registering-mechanism, and the cam j^1 depresses the rod k^1 to fix the cam shaft of the checking-apparatus.

FIG.1.

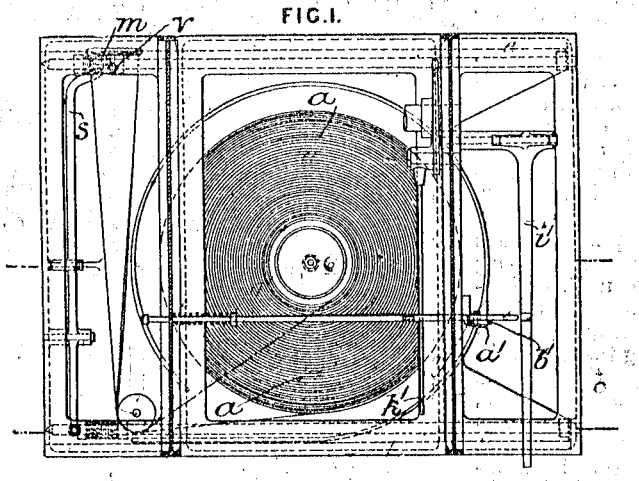

FIG.3.

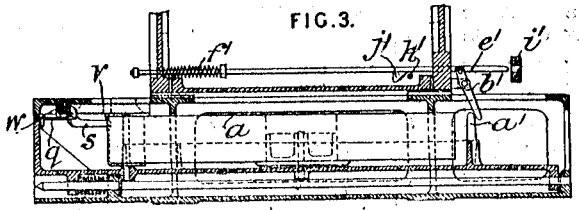

1110. Soc. Anon. des Appareils de Controle et de Comptabilite Automatique, Frydmane, J., and **Chambon, L.** Sept. 25, A.D. 1903, [*date applied for under Patents Act, A.D. 1901*].

FIG.1.

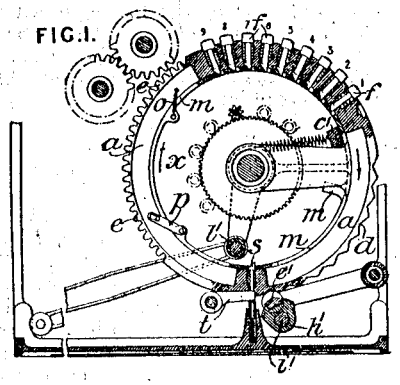

Receipts, checking and recording; calculating-apparatus.—Composing-discs for the composition of the sums to be registered and totalized in cash registers, calculating-apparatus, and the like, more particularly applicable to the checking and calculating apparatus described in Specification No. 17,499, A.D. 1901, are rendered automatic in their circular displacement for the alignment of the figures &c. The operator merely sets the pushes or keys *f* of the discs *a* by pressure. Upon one-third each disc has locking-notches *d*, while upon another third it has engaging teeth *e*. The internal ring *m* is pulled by the spring *o* in the direction of the arrow *x*, and the displacement is limited by the link *p*. The spring-pressed pawl *s* lodged in the crown or disc *a* bears upon the locking-lever *t*. When a push *f* is depressed, the ring *m* is displaced and the disc is turned until the internal projection of the push encounters the fixed rod or stop c^1. The bar e^1 is lodged in a notch *d* by the action of the cam h^1 on the rotation of the shaft i^1 to lock the discs in their set positions. The transverse bar l^1 by encountering the projections m^1 first produces a relative displacement between the rings *m* and the crowns *a* to allow the pushes to be released, and then returns the composing discs to their zero position with the arms bearing upon the fixed rod c^1.

Fuller G 1044/1878 Cylinder Slide Rule

1044. Fuller, G. March 16

Slide-rule for working arithmetical calculations in which multiplication, division, involution, and evolution are required singly or in combination. A cylinder *a* works on a cylindrical rod *b*, and has on its curved surface a single logarithmic spiral scale. The circular section is also divided into 100 parts by ε scale at the bottom. A slip *c*, of wood or metal, carries two indices and a scale *f* equal to the axial length of the spiral. These indices are so far apart that when one is at the commencement of the logarithmic scale the other is at its termination. A movable index *g* is also provided and is fixed to a ring which slides on the rod *b*. The logarithmic scale with its indices are required for multiplication and division, —while for involution and evolution, the index *g* is not required, but the scale at the base of the cylinder and the scale *f* are required in addition.



The Fuller Calculating Instrument W Feely & C Schure JOS V4.1 Mar 1995
1. W .F Stanley Co., London, Fuller Calculator Instr. Manual, 1879.
2. Bobby Feazel, "Palmer's Computing Scale," *Jour. Oughtred Soc.*, Vol. 3., No. 1, 1994.
3. W .F Stanley Co., London, *Catalog*, 1960.
4. Keuffel & Esser Co., NY, *Catalogs*, 1895-1925.
5. Eugene Dietzgen Co., Chicago, *Catalogs*, 1904-1938.
6. Acme Blue Print Co., Chicago, *Catalog*, 1921.
7. Elliott Brothers Co., Cleveland, *Catalogs* of 1925 and 1941.
8. W. Feely and C. Schure, "*Thacher Slide Rule Production*," JOS, Vol. 3(2), 1994.
9. W.F. Stanley Co., London, *Fuller Calculator Instruction Manual*, 1907.
10. W.F. Stanley Co., London, *Fuller Calculator Instruction Manual*, 1940.
11. W .F Stanley Co., London, *Catalog*, 1888.
12. Keuffel & Esser Co., NY, *The Compass*, W. Cox, Ed., Vol. 1,1891-1892, page 66.
13. Keuffel & Esser Co., NY, *The Compass*, W. Cox, Ed., Vol. 1,1891-1892, page 124.
14. Nevil Shute, *Slide Rule*, William Heinemann Ltd., Melbourne, 1954, Chapter 3 (exact page varies with edition).
Fuller Style Calculators Hopp UKSRG1 Autumn 2000

1. Long-Scale Slide Rules by Edwin J. Chamberlain Journal of the Oughtred Society, Vol. 8 No.1, Spring 1999, p24

2. The Fuller Calculating Instrument, by Wayne Feely & Conrad Schure Journal of the Oughtred Society, Vol. 4; No.1. Spring 1995

3. The Fuller Spiral Scale Slide Rule by Wayne Feely
The Chronicle of the Early American Industries, Vol. 50, No 3, September 1997, p93.

4. Update of Known Fuller & Thacher Rules by Wayne Feely Journal of the Oughtred Society, Vol. 5; No.1; March 1996, p25.

5. Whythe Complex Slide Rule in Fuller Style Journal of the Oughtred Society, Vol. 8; No.1; Spring 1999, p15

6. Slide Rule for Complex Numbers by D.J. Whythe Electronic Technology, September 1961.

7. Calculating before the Chip, an Australian Perspective by Bert Bolton & Nicola Williams Australian and New Zealand Physicist, Vol. 33 No 7, July 1996.

Fyffe W 4783/1899 Tab wage calculator

4783. Fyffe, W. March 4.

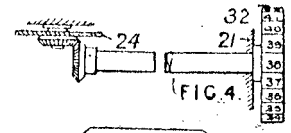

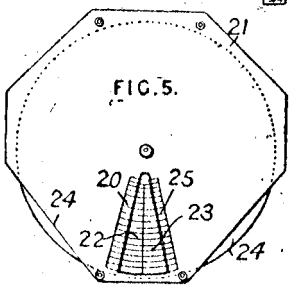

Calculating-apparatus.—Relates to ready-reckoners. A disc 24 is mounted to rotate in the casing 21, and its face is marked with segmental columns of values 22, 23, say of wages, corresponding to scales, say of hours, marked, along the edges 20, 25 of a sector-shaped opening, at the rate per week. Thus the scales 20, 25 may be marked respectively ¼, ½, ¾, 1, 3, ... 53 hours and 2, 4, 6, ... 54 hours, the sector shown having 38*s.* (per week of 54 hours) marked upon it, and in the sectors 22, 23 respectively the values at this rate per week viz.: 2*d.*, 4*d.*, 6*d.*, 8½*d.*, 2/1½, ... £1/17/3½ and 1/5, 2/10, 4/2½, ... £1/18/0. The increasing width of the sectors gives room for the larger values. The disc may be turned by its projecting edge, as shown, or it may be entirely enclosed and be bevel-geared, Fig. 4, to a graduated head 32. Two discs, each graduated on one face only, may be employed.

Garcia M J 26507/1905 Solve spher triangles

26,507. Garcia, M. J. Dec. 19.

Calculating-apparatus.—Relates to apparatus for solving spherical triangles and adapted to various problems in nautical astronomy, such as tracing Sumner lines on a chart, determining variation of hour angle with the latitude and altitude, finding hour angle and azimuth, and calculating position by double altitudes. All the determining lines, angles, &c. are projected on to a plane passing through the meridian of the heavenly body observed, and a single arc is used for all the readings, the solution of a problem being determined by the intersection of two circles projected as straight lines on to the plane of the instrument. The body 1 of the instrument has guides 2, 3 for a frame 4 which when adjusted is clamped by a thumb-screw 6 to a slide 5, which can be adjusted slightly by a screw 7. A part 10 slides in the frame 4 and has a number of parallel lines to enable readings to be transferred from the sides of the frame 4 to a rotatory graduated arm 13. This arm and a similar arm 14 have longitudinal slots and end verniers which move over

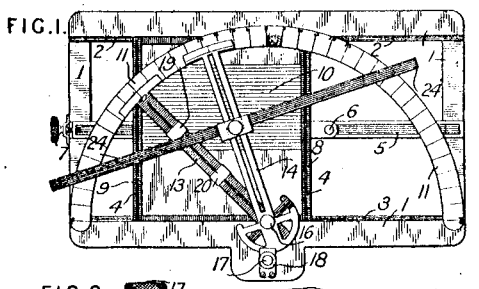

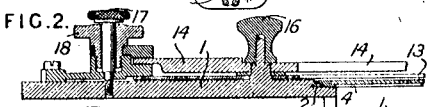

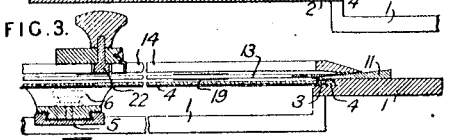

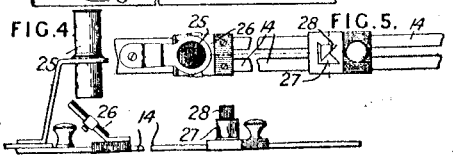

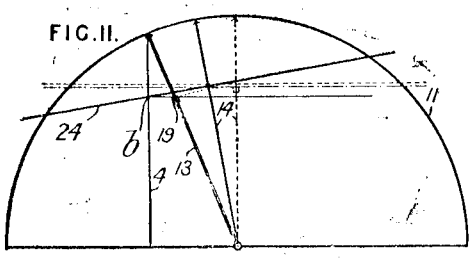

the arc 11. The arms are secured to the arc by a screwed part 16 and can be clamped in position separately by screws 17, 18 arranged as shown in Fig. 2. The lower arm 13 carries two sliding markers 19, 20 to facilitate reading, while the upper arm 14 carries a rule 24 arranged at right-angles to it and adjusted along its length by a rack and pinion 22, Fig. 3. In using the instrument, the equator is represented by the vertical line through the zero of the arc 11. The rule 24 may be replaced by the sighting-device shown in Figs. 4 and 5. This consists of two reflecting-prisms 27, 28, adjustable along the arm 14, and a sighting-tube 25 and a mirror. A sight is also provided at the end of the arm 13, and adjustable sights are arranged in guides 8, 9 in the frame 4. In using the instrument to determine the hour angle from the declination and altitude of a star and the latitude, the arm 14 is fixed at zero and the arm 13 is fixed at the angle corresponding to the zenith distance along the arc 11. The rule 24 is then adjusted until it passes through the end of the arm 13 and clamped to the arm 14, which is then turned to the angle corresponding to the declination as shown diagrammatically in Fig. 11. The ship is somewhere on the rule 24. The arm 13 is then turned to the angle corresponding to the latitude, and one edge of the frame 4 is brought into coincidence with the end of the arm 13. Then the ship will be at the point of intersection *b* of the edge of the frame with the rule 24. A marker 19 is then adjusted at the point where a parallel from the point *b* meets the arm 13, both arms 13, 14 are turned to zero, and the rule 24 is adjusted until it coincides with the marker 19. The rule 24 then indicates the hour angle on the arc 11.

Garner D A 10382/1891 Adder

10,382. Garner, D. A. May 5.

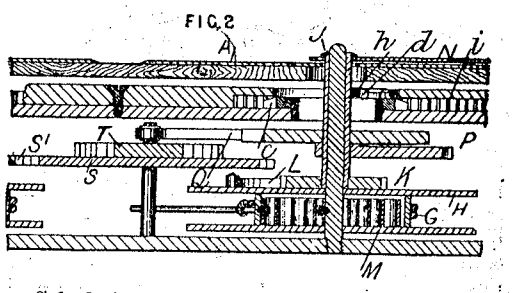

Calculating-apparatus. — Relates to adding-machines. Hands N are shifted round decimal dials A by the return movements of spring drums H which are turned through angles corresponding to the digit to be added by pulling hand-slides at the ends of cords G. When the slides are released the springs M return the drums, and pawls L engaging ratchets K drive round the cannon spindles J carrying the hands N. The tens are carried from one dial to the next on the left by means of an arm P on the cannon arbor which strikes a star-wheel T in one with a spur-wheel S geared in a similar wheel S^1 upon the next cannon. A check pawl Q prevents reversal. For returning to zero the cannon arbors of the hands pass through toothed rings *c* in gear with a long rack *i*. On shifting this rack spring pawls *d* extending inwards from the ring engage pins *h* upon the cannons and drive them back to zero.

Gancher A I 17161/1907 Chain adder for £sd The "Golden Gem"

which the chains pass. The machine is shown in sectional elevation in Fig. 5, and in plan, with part of the casing removed, in Fig. 3. For each denomination there is a chain E^1 passing around a pinion

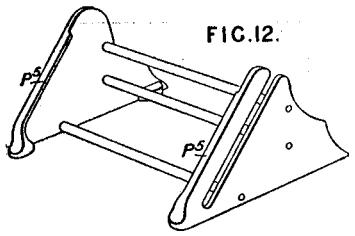

fast to its particular numeral-wheel D, all of which ride loosely upon the main counter spindle C; at their lower ends the chains engage pinions E^2 in one with zeroizing-wheels upon the zeroizing shaft F. Numeral-wheels and setting-plates G are provided for pence, units, and tens of shillings, and as many pounds denominations as required, the setting-plates being distinguished from one another by variations in colour. The style is inserted opposite the required digit and brought down until arrested by the edge A^3 of the gap in the casing. Figs. 8 and 9 show the ratchet-wheels I which receive the transfer motion from the transfer pawl H, which is pivoted within the lower numeral wheel and continually pressed against the fixed cam J by a spring H^3. This spring and the pivot of the pawl are both kept in place by the sheet-metal rim D^9 of the wheel, which bears the numerals and has its ends interlocked. The cam is recessed at the required transfer points to allow the pawl to engage, the action being rendered positive by fixed guides K; spring detents L engage the chain pinions. Zeroizing is effected by rotating the knob at the end of the shaft F, whereupon the spring-controlled balls O, Fig. 11, which constitute a ratchet connexion between the chain pinions E^2 and the shaft, are caught by the radial edge of the slot F^2 and brought to such a position that the numeral wheels display zero through the reading apertures in the casing. The stand shown in Fig. 12 may receive the machine while in use, the casing being retained by the flanged ends P^5 and resting against the cross-bars; a slot is provided for the zeroizing-spindle.

17,161. Gancher, A. I. July 26.

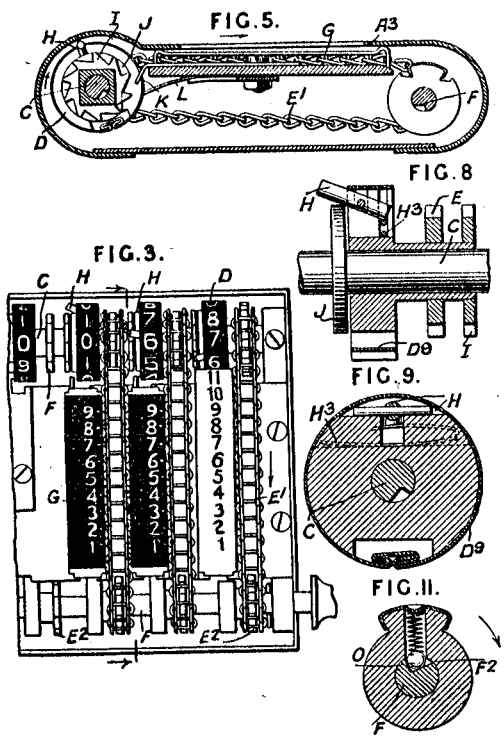

Calculating-apparatus; counting-apparatus.—A multiple-denomination machine, set and operated by a style, is arranged for English monetary values, and has endless chains for actuating the numeral-wheels of the counter, which is provided with transfer mechanism of the travelling-pawl type and is zeroized by rotation of an auxiliary shaft around

Golden Gem Adding Machine

A chain drive adder marked "Golden Gem Adding Machine" and "Automatic Adding Machine Co., New York". Three patent dates of 1904, 1906 and 1907 are listed, with a note that other patents were pending. The adder case is 4 inches long and can be propped at an angle by means of folding supports. The adder works very smoothly and is in fine condition, with a hard leather case and stylus.

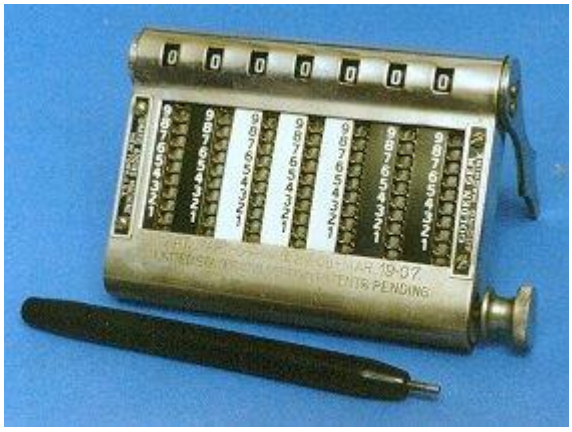

Garrigues P 17008/1902 Gauge to measure heaps of stones

17,008. Garrigues, P. July 31.

Profile gauges; calculating-apparatus.—A folding gauge or templet, for stones arranged on roads in heaps having a trapezoidal isosceles section and sides inclined at 45°, is formed of the two staves A B, C D, the transverse bar K L, the cursor H, and two bolts E, F. The staff A B has a central slot with transverse scale graduations on the left, and graduations inclined at 45° on the right. The slotted bar C D has inclined graduations, and the graduations on the transverse bar K L are also inclined at 45°. The transverse bar is composed of two parts, one being slotted or grooved while the other is solid. The various scales are calculated in regard to the positions of the graduations,

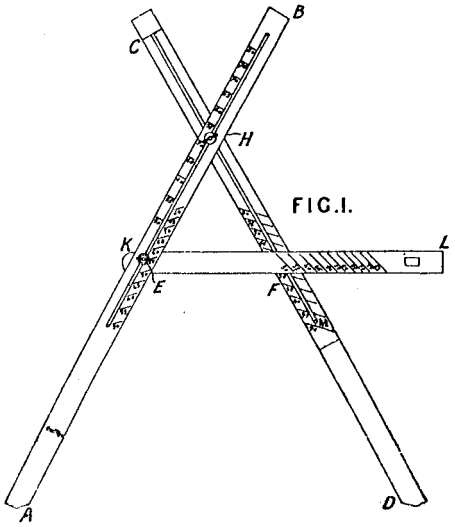

FIG. I.

and read from 30 to 80 by fives, the gauge being constructed for gauging from ·30 to ·80 square metres. The cursor H is composed of two discs each surmounted by a tenon, one tenon being marked with a line.

Gateuil J N 3258/1872 Add Multiply

3258. Gateuil, J. N. Nov. 2. [*Provisional protection only.*]

Calculating-apparatus.—A series of discs which are alternately fixed and movable and of increasing size are mounted on an axis beneath a fixed radial bar. The movable discs are pierced with perforations for a wooden peg which can be inserted opposite any number on the fixed discs, and the movable discs are then turned with the peg, until this is stopped by the radial bar. Thus, in adding pence, the first fixed disc being divided into twelve parts, and the zero point being pierced to show the number on the movable disc below it, the peg is inserted in the perforation of the movable disc opposite, say, the five, on the fixed disc, and the disc turned until the peg is stopped, when the figure five will be seen through the opening in the fixed disc. If now a second number, say four, is to be added, the peg is placed in the perforation opposite the four and the disc again turned until stopped by the peg reaching the bar. The sum is read through the opening in the fixed disc. After a complete revolution of the movable disc, the next movable disc must be moved through one division

73

---

indicating shillings, and so on with the pounds. The apparatus is stated to be applicable for multiplication and subtraction.

Geny E 2003/1880 Adder

2003. Geny, E. May 15.

Calculating-apparatus. — This consists of ten levers numbered from 0 to 9, which operate toothed wheels by means of toothed sectors, each lever turning the units wheel through a space corresponding to its number. The units wheel actuates the tens and hundreds wheels by catches in the usual way. The resulting sum is read off the peripheries of the wheels through three glazed apertures.

Gillman G 23024/1894 Diagram for stadia measurements

23,024. Gillman, G. Nov. 27.

Calculating apparatus. — Relates to a diagram for correcting the errors of stadia measurements due to the staff and observing instrument being at a different level. If g be the difference of the readings on the staff, H the horizontal distance required, then the scale on the staff is so set out that $g = H$ when the staff and observing instrument are on the same level. If, however, the difference of level be h, and a the angular elevation, it can be shown mathematically that $h = H \tan a$ and $H = g \cos^2 a$, from which $h = g \tan a \cos^2 a$. Now if x be the reduction required for given data, $g - x = H$, which gives the result $h = gx - x^2$, where h, g are running co-ordinates, and x is a variable parameter. The diagram is ruled

FIG. 7.

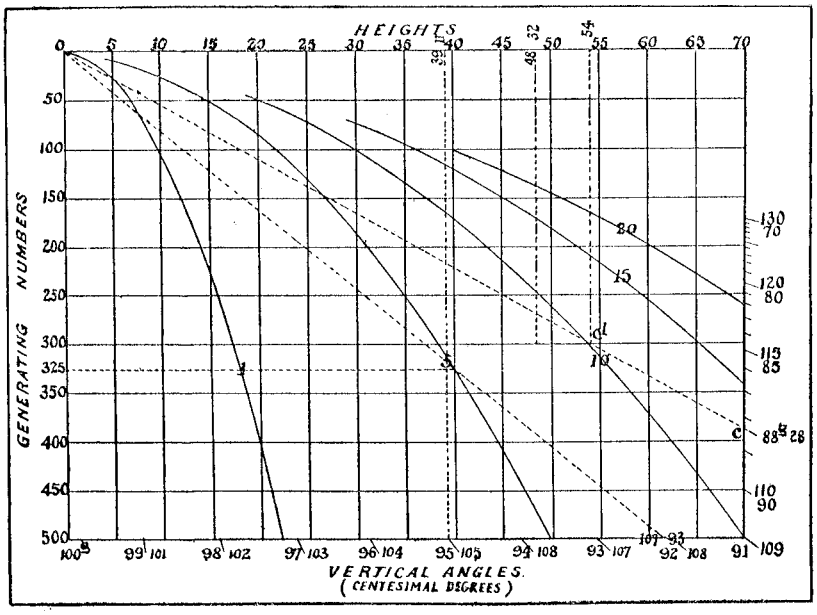

185

Ginet J H 25156/1905 motorised adder

25,156. Ginet, J. H. Dec. 4.

Calculating-apparatus ; counting-apparatus.—In a single-bank key-set motor-operated adding-machine, the mechanism is divided into two groups, (1) including the spring-motor key-board with interlock, and differential setting-mechanism controlling the motion of the main operating-shaft, and (2) the totalizing-counter with its zeroizing, transferring, and associated locking-arrangements, the connexion between these groups consisting of a master setting-wheel splined upon the main shaft but moving longitudinally with a small carriage, which can be brought to the position corresponding to any desired counting-wheel by means of a denomination key. Fig. II shows those parts

arranged in a common casing and framework, the motor 13 driving the main shaft 23 through gearing and actuating a bell 18 when almost run down. Upon the shaft are nine pinions 25, one for each key, and these parts are normally held stationary by the detent 28, Fig. VII, which engages the ratchet 26 until a key is depressed, when the following action results :—The shank 31 moves

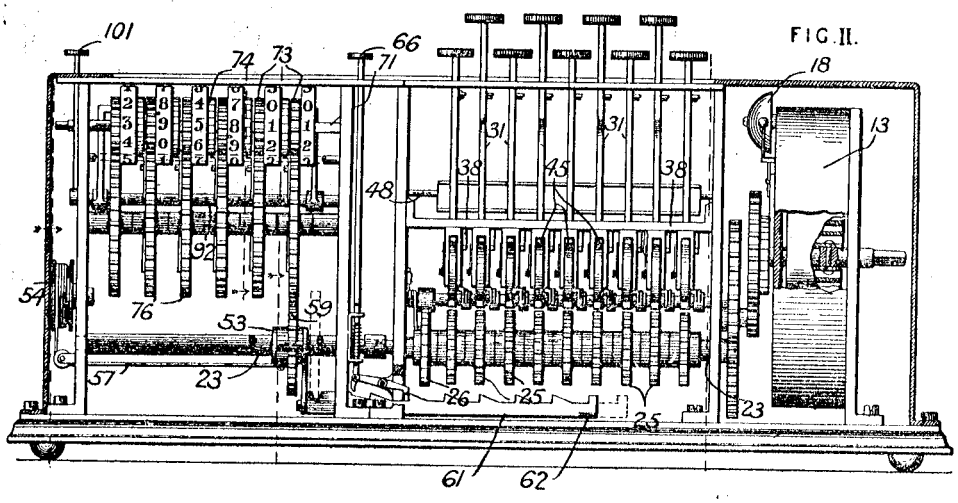

FIG. II.

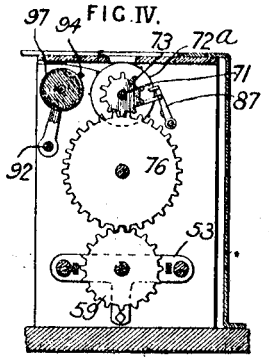

FIG. IV.

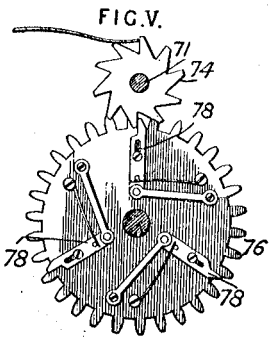

FIG. V.

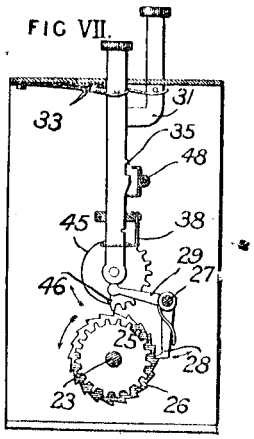

FIG VII.

down against its spring 33, and rocks the locking-plate pivoted on the rod 48 so that its upper edge prevents the depression of the stud 35 on any other shank ; the control wheel 45 gears with the corresponding main-shaft pinion, a projecting tooth on the spring latch-plate 38 snaps into a slot on the shank and locks it down, and finally the arm 29 on the rock-shaft 27 is moved and throws the detent on the main shaft out of gear. The shaft then rotates until a pin 46 upon the engaged control-wheel strikes the projecting end of the latch-plate and forces it back, releases the shank which flies up, allows the main-shaft detent to re-engage, lifts the control wheel free so that it may be rotated to normal position by a spring, and simultaneously unlocks all the other keys. The pins on the control wheels are positioned according to the value of the keys. The master setting-wheel 59 on the main shaft forms the connexion between the setting and totalizing parts, and is mounted on a carriage 53, 61, controlled as to position by a cord and spring drum 57, 54, a rack bar 61 with restoring handle 62, and the denomination key 66, which controls a double-armed pawl. The actuating-pinion 73 of each numbering-wheel engages with its own driving-wheel 76, Figs. IV and V with which the master setting-wheel may be brought to engage, and spring-controlled teeth 78 upon these transfer by engagement with transfer pinions 74, at the same time striking an arm which hangs loosely upon the counter-spindle 71 to bring the detent 87 into gear with the higher actuating-pinion and prevent overthrow. To zeroize the counter, the master setting-wheel is moved to the extreme right out of gear and the zero-key 101 depressed to rock the shaft 92 and swing the friction roller 97 mounted thereon into contact with the number wheels, which are themselves rotated when an external handle on the roller spindle is turned, the zero position being determined by a pin 72^a upon each wheel striking the yoke 94.

© B O B Williams Printed22/11/2023 CalcPatents Ed. 1.doc

Giot H L V D 112012 of 1916 Spherical trig.

112,012. Giot, H. L. V. D. Dec. 12, 1916, [*Convention date*].

Spherical trigonometry calculators.—The time of transit of stars is determined, and those upon any required hour circle are identified, by means of a star map and relatively adjustable circular scales of right ascension and date. Within an annular ring *a*, graduated in time on the edge *c*, from 0 to 24 hours, is an adjustable rotary disk *b* bearing a projection of the stars of one polar hemisphere and of the declination-belt of the opposite hemisphere up to 40 degrees declination. The edge *d* of this disk is also graduated in time from 0 to 24 hours, against which are placed the dates *e*, *f* of the year upon which the true and the mean suns have the right ascensions shown upon the time scale. Radial arrows *g* from stars of first and second magnitudes indicate their right ascensions, and the declinations for a given epoch, with the variations for both, are given. If the date of the year be brought opposite zero upon the outermost scale, the reading against the radius from any star to the same scale will indicate the true or mean local time of the star's meridian passage, according to which date is set. A slotted radial pointer *m*, bearing a declination scale, enables the meridian zenith distance of a star to be reckoned if the latitude is known. A similar projection and scale for the opposite hemisphere are provided upon th opposite face of the apparatus.

FIG.1.

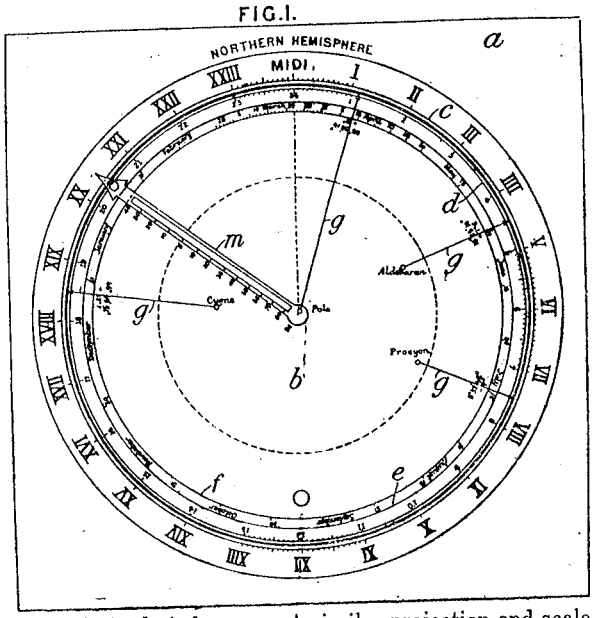

Giuliani V 20467/1908 ASMD

20,467. Giuliani, V. Sept. 30, 1907, [*date applied for under Section 91 of Patents &c. Act, 1907*].

Calculating - apparatus; counting - apparatus.— The manually-operated setting-wheels *c* of an apparatus for addition and subtraction, which may also be utilized in a similar manner for multiplication and division, are provided in the example shown with three series of ten teeth, every tenth tooth being coloured white, (shown shaded in Fig. 1). These wheels, which engage with number-wheels *a*, are set with the aid of scales bearing the numerals 1^8, 2^7 3^6 . . . 9^0 as shown, the large numerals being utilized for addition and the small ones for subtraction. In setting an amount in the course of either operation the selected tooth is depressed until it is on a level with the plate *g*. The result of a calculation is read on the wheels *a* which bear a double series of numerals similar to those described above; the numerals on the tooth opposite the aperture marked + being exposed to view. Transfer from a lower to a higher wheel takes place by means of a cam *d*, a weighted transfer lever *e*, and a pivoted pawl *f*. Overthrow is prevented by connecting the pawl and transfer lever by means of a cord *h*; the length of the cord being insufficient to allow the weighted end of the transfer lever after its elevation by the cam to fall into contact again with it. The pawl *f* is thus held in engagement with, and locks, the teeth of the higher wheel *c*. Spring detents *b* are provided. To zeroise the numeral wheels, a shaded tooth of each setting-wheel *c* is brought into alinement with the plate *g*, in which case the number 999 . . . appears in the aperture +. The units wheel *c* is now turned through one tooth in the proper direction, thus zeroizing all the wheels *a*. In a modification, the wheels *a* are dispensed with, and the series of numerals marked directly on the teeth of the wheels *c*, which are shaped like those of *a*, a suitable aperture for viewing the numerals being provided.

FIG. 1.

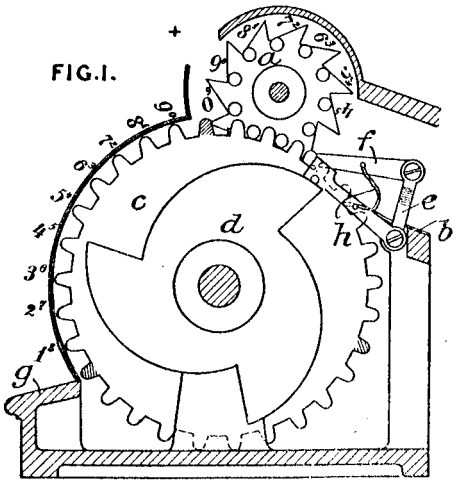

Glaser W H 487/1903 Slide rule for textiles

487. Glaser, W. H. Jan. 8.

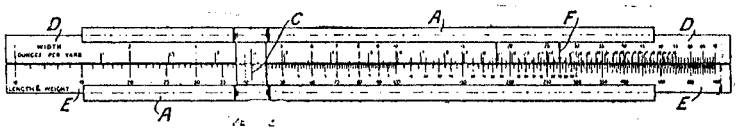

Slide-rules.— Relates to a special slide-rule for use in the textile-fabric trade, to convert English weights and measures into metric ones. A frame A is fitted with sliding scales D, E and a fixed fiducial line C. The slide D is graduated logarithmetically from 1 to 10, and then with a scale of the same radius from 10 to 70. The lower slide E is similarly graduated but differently numbered. The upper slide, in addition, is marked with a third scale, also to the same radius as the others, running back from 16 at a given mark F.

Glaser W H 109330/1916 Slide rule with vernier

109,330. Glaser, W. H. Oct. 10, 1916.

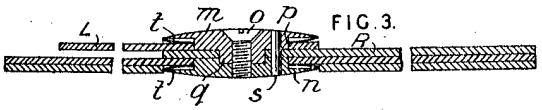

Slide-rules having the graduations in certain parts of the scale so close as to introduce difficulty in reading are provided with means functioning as verniers whereby accurate reading is facilitated. The device is described as applicable to the solution of triangles for use in gunnery, and is provided with distance and log-sine scales. In the form shown in Figs. 1 to 3, the apparatus comprises a card bearing circular logarithmic scales *a*, *b* the first of which is graduated in sines from 1° 40′ upwards, and the second in distances up to 8000 yards, the lower part of the distance scale being offset at *e*. The part of the scale *a* lying between 70° and 90° being too small for accurate reading, an enlarged scale *c*, Fig. 1, is formed, according to one method, by adding to each graduation a constant amount and providing a sector L, Fig. 2, bearing a scale *h* evenly divided

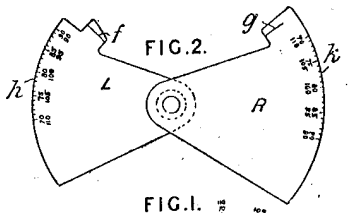

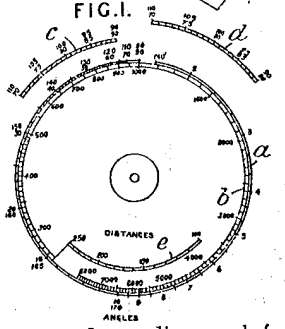

with these markings, and a reading-mark *f* situate so that, when the mark *f* coincides with 70° on th

normal log-sine scale *a*, the 70° on the vernier scale *h* coincides with 70° on the extended log-sine scale *c*. A second scale *d*, co-operating with a sector R bearing a second scale *k* and a reading-mark *g*, is provided. The reading-mark *f* extends inwardly far enough to read against the extension *e* of the distance scale, and the mark *g* reads only against the normal scales *a*, *b*. The sectors R, L are made of celluloid and pivoted at the centre of the scales *a*, *b* on members *m*, *n*, Fig. 3, clamped together by a screw *o*, the sector R being carried on a boss *q* which is smaller than a boss *p* carrying the sector L. A pin *s* passes through the parts *m*, *n*, R, and spring-washers *t* are provided so that the sector L is capable of adjustment independently of the sector R, but so that both move together when the sector R is turned. To avoid errors due to parallax, the scales are placed on the lower sides of the sectors, and the sine scales are graduated in angles and their complements. More particularly, the device is applied to the solution of triangles based on the formula $\frac{x}{\sin X}=\frac{y}{\sin Y}=\frac{z}{\sin Z}$ The inner part of the disk bearing the distance scale may be made to revolve, and only one sector may be provided. In a modification, the scales may be marked on steel tapes and wound on drums placed side by side, means for locking the scales together when necessary being provided. The invention may be applied to scales other than those described, and a constant amount may be deducted from the scales instead of being added thereto.

© B O B Williams Printed22/11/2023 CalcPatents Ed. 1.doc

Gleason A 10230/1892 Local time

10,230. Gleason, A. May 23.

FIG. 1

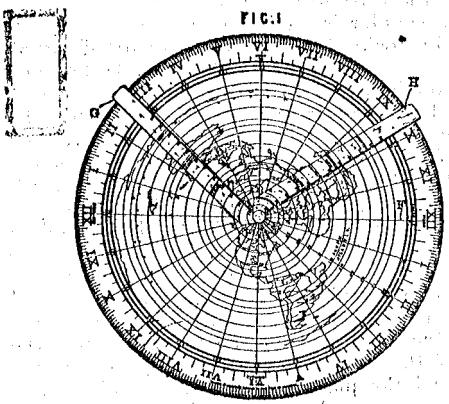

Calculating-apparatus for finding local time. A flat map of the world is drawn with lines of longitude and latitude. The circumference is divided to represent hours and minutes, 12 noon being put at the meridian of Greenwich F. Two movable arms G, H marked with parallels of latitude are centered on the map and may be rotated together or separately. By placing one of the arms H with its edge on the meridian of Greenwich F and the other arm G with it edge on any particular place, the difference between the time at that place and the time at Greenwich can be read off on the scale. By now moving both arms together till the arm H is at the division of the scale indicating the present Greenwich time, the position of the arm G shows the time at the other place.

Gledhill A H 20725/1907 Transfer mechanism

20,725. Gledhill, A. H. Sept. 18.

Calculating-apparatus; receipts, checking and recording.—Relates to transfer mechanism of the type in which the actuating-elements are set on the positive stroke of the keys and the registering-wheels are rocked into gear therewith on the return stroke, and consists in providing for additional movement of the returning actuating-elements at transfer. The keys 1 on being depressed raise tappets 3, set differentially upon the shaft 2, and provided with sectors 4 which gear with wheels 5 on the telescopic shafts 6, 7, and 8. The counter-wheels 13 are mounted on a rocking frame 9 pivoted on the shaft 10, and operated from the shaft 2 by gearing with the cams 20 and the runners 22. On the return stroke of the keys, the frame 9 rocks the registering-wheels 24 into gear with the wheels 5 previously set by the positive stroke of the key, and the wheel 5 is thereupon rotated in the reverse direction by the action of the spring 25,

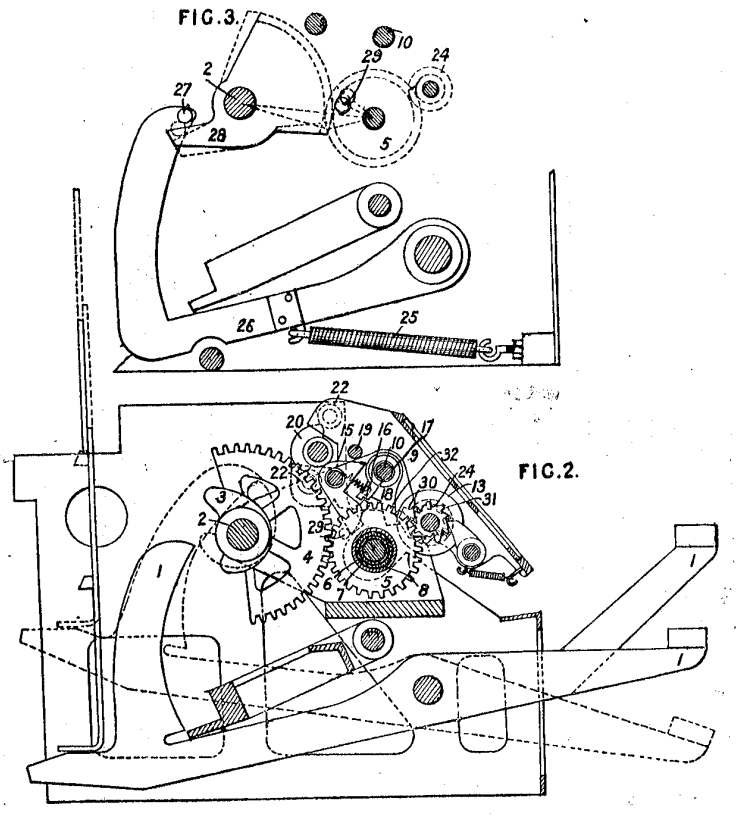

© B O B Williams Printed22/11/2023 CalcPatents Ed. 1.doc

Glendinning A 18749/1896 Calendar Day of week

18,749. Glendinning, A. Aug. 25.

Calendars; calculating-apparatus.—The apparatus is for determining the day of the week on which any particular date falls. The form shown, which allows of calculations between 1801 and 2008, carries the years on a slide, but modifications are described in which cards are employed. The columns of years are marked on a slide *d* working between a front plate *a* and a back plate, and the required column is brought into position in the slot a^1 by moving the index *e* to the corresponding indication at *g*. The years run consecutively without break, except that gaps of 11 years and 5 years are left respectively before and after 1900 on account of the absence of the leap year. On the right of the slot a^1 is a table of months, with columns of first days of the week below, corresponding with the years in the columns on *d*; on the left are seven tables showing on what day of the week each day of the month falls when the first day is Monday, Tuesday, &c. Months with 31 days and the first days of February in leap years are printed in red. To use the apparatus, suppose it is required to find on what day of the week the 18th June, 1815, fell. Under June in the right-hand table, and opposite 1815, is found Th., so that the first was a Thursday. Turning to the table on the left marked Thursday, it is found that the 18th was a Sunday.

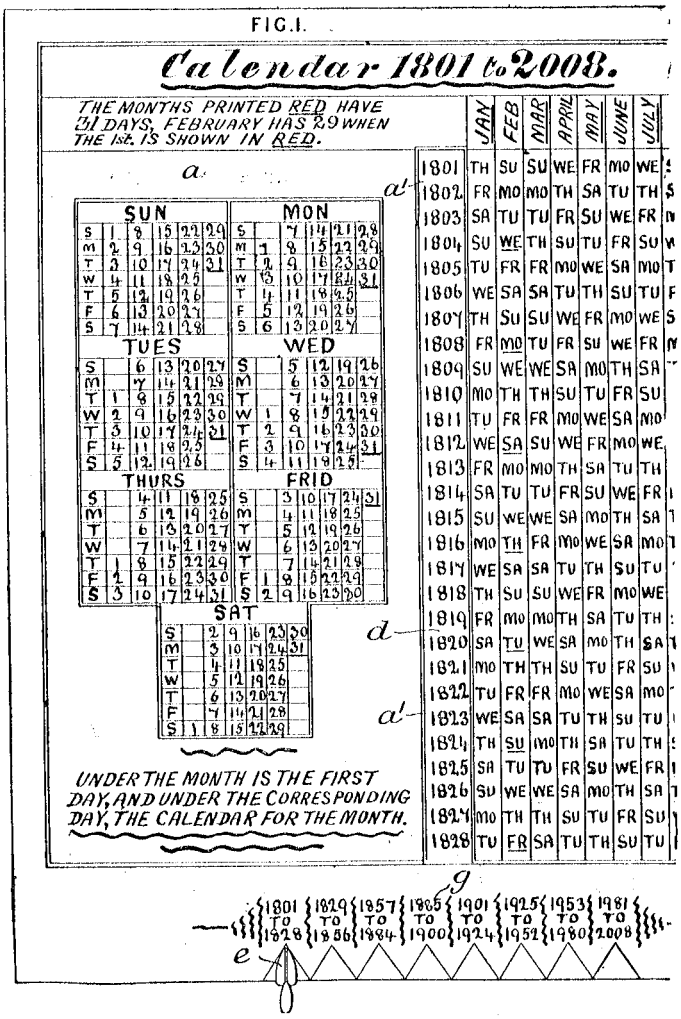

Glover T R 10814/1891 Multiply by strips

10,814. Glover, T. R. June 25.

Calculating-apparatus.—Relates to multiplying-machines. Sinuous celluloid strips A^4 are printed with repetitions of the products of a digit (marked at the top) by 7, 4, 2, and 1 in the manner shown, so that the units and tens of each set are in two separate vertical columns, and the units and tens of contiguous sets are in the same column. Only the products by 7, 4, 2, and 1 are used, as the additions of pairs of these products give the products of the remaining digits; for instance, the product by 6 is the sum of the products by 4 and 2. The multiplicand is set up in these strips on a board provided with a slide B^2 having a vertical slot with sets of four horizontal shutters marked 7, 4, 2, 1, one set of shutters being opposite each set of products on the strips. One set of shutters is used for each place of digits of the multiplier, one or two shutters of the set being opened. The slide is then shifted from right to left over the multiplicand strips to expose the columns of figures one at a time for addition.

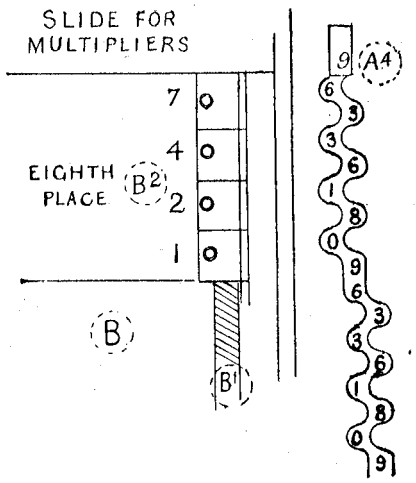

Glover T R 15113/1893 Multiplying apparatus

the tens racks of one are in line wit
higher. The side levers *e* are in gro
the steps of the strips *b*, and numbered
9 can be made up in any group by

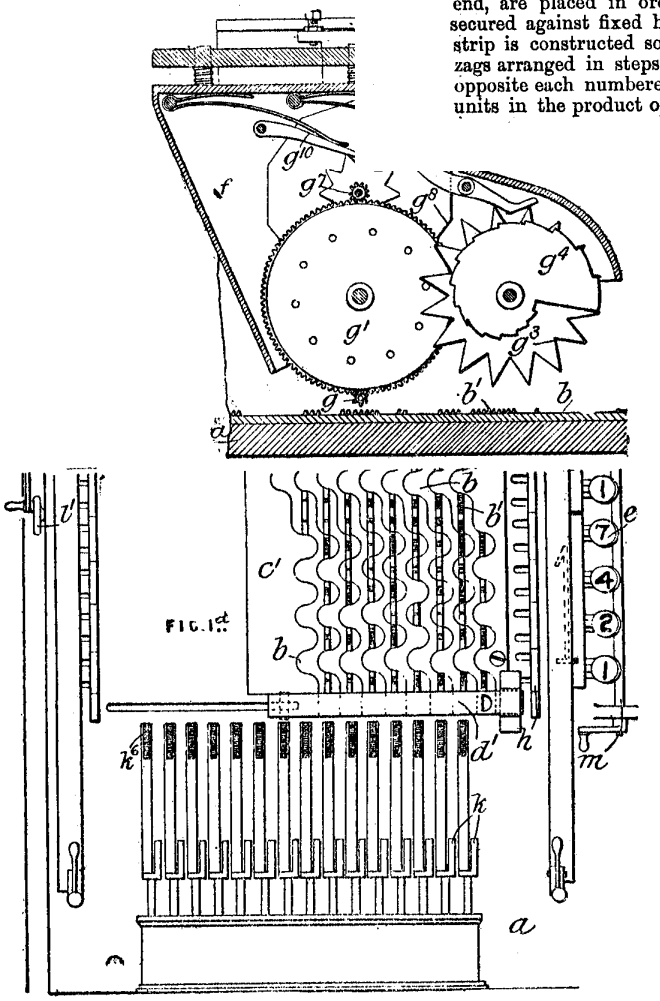

numbers marked ; when the numbered levers bearing the figures of the multiplier in the successive groups are depressed, corresponding blocks *h* are displaced to the left by link connections. A carriage *f*, Fig. 3, is then drawn from rear to front of the machine, carrying an independent counting-mechanism over each line of racks. The carriage moves between suitable side-guides, and rests on the blocks *h*, but where a block is displaced the carriage descends sufficiently for the counting-mechanisms to count all the teeth opposite the displaced block, so that when the front is reached the counters show the total numbers of teeth opposite depressed side levers, which is the product required. Each counting-mechanism consists of gear-wheels *g*, g^1, g^7, a number-wheel g^8 below a window f^1, and a star-wheel and retaining pawl g^{10}. For transferring tens from each counter to the next, each wheel g^1 carries pins to operate a wheel g^3, carrying a stepped disc g^4 ; when the carriage has passed all the strips *b*, the counter-wheels *g* are turned further by racks k^6 until these are

58

15,113. Glover, T. R. Aug. 8.

Calculating-apparatus for performing multiplication. Fig. 1[a] is a plan view of part of the machine ; Fig. 3 a vertical section of another part. Loose metal strips *b*, each marked with a number at its rear end, are placed in order on a flat base *a* so that the numbers represent the multiplicand, and are secured against fixed holders by slides d^1, c^1, the latter movable by screws and coupled wheels l^1. Each strip is constructed somewhat as described in Specification No. 10,814, A.D. 1891, with groups of zig-zags arranged in steps, the zig-zags carrying short racks b^1 ; on each strip the oblique pair of racks opposite each numbered side lever *e* have teeth corresponding in numbers respectively to the tens and units in the product of the numbers marked on the particular strip and lever. The strips fit so that

57

pressed back against springs by contacts of arms *k* on them with the stepped discs g^4 of the next lower counters. The counters are returned to zero by returning the carriage *f* to the rear. A cam *m* is provided to return the levers *e*.

© B O B Williams Printed22/11/2023 CalcPatents Ed. 1.doc

Goldberg H E 15775-6/1902 Adder typewriter

15,775. Goldberg, H. E. July 15.

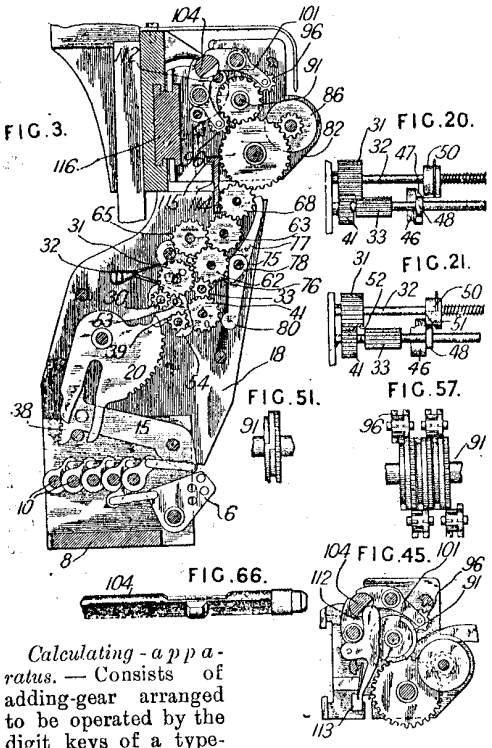

Calculating-apparatus. — Consists of adding-gear arranged to be operated by the digit keys of a type-writer or similarly. In the left and right hand halves respectively of a bridge 8 over the keys five and four rock-shafts 10 and intermediate levers 6 are operated by the keys, and in turn operate centrally-placed levers 15 by which rotation is imparted through toothed gearing between cheeks 18 to adding-gear in a casing 82, upon a slide 116 that is clutched to the paper-shifting carriage. The central gearing comprises sectors 20 operated by the digit levers 15 and a train of pinions and wheels 30, 31, 33, 62, 63, 68, part of which is shown in plan in Fig. 20; the pinions 30 corresponding to the sectors are on a common shaft, and one of them gears with the first wheel 31 of the train; the second pinion 33 of the train is long enough to allow shifting, while remaining in gear with the second wheel 62 of the train. Owing similarly to the digit levers having teeth 38 to gear with pinions 39 one of which is in gear with a wheel 41, as the key concludes its stroke, a cam 47 on the shaft of the wheel 41 Figs. 20 and 21, is turned against a collar 48 on the shaft of the long pinion 33, to shift it out of gear with its driver 31. As the key and driving-gear recover their initial positions, a cam 51 on the shaft 32 of the first wheel 31 puts the long pinion back into gear with it. In order that the wheel 31 may not interfere with the long pinion while the latter is being shifted, the wheel has a portion 52 of its toothed face cut away, the lost motion so necessitated being allowed for by additional teeth on the sectors. To put the calculating-mechanism into or out of action, the pinion shafts are shifted by pushing a bar 53 bearing a yoke 54. The second wheel 62 of the train can be shifted so as to drive the third 63 either directly or through a reversing-wheel 65 according as addition or subtraction is to be performed. The adding-gear in the housing 82 consists of numeral wheels 86 and the carrying-wheels 91 and pinions 96, which are more clearly shown in Figs. 51 and 57. The slide 116 bearing the adding-gear in its housing moves from right to left of the type-writer with the ordinary paper carriage (upwards from Fig. 3), and each receiving-wheel is brought in succession into gear with the last wheel 68 of the train for the addition of the corresponding figure; the addition thus proceeds from left to right of the items. The carrying-pinions and a non-revoluble pinion for engaging only the units wheel are mounted in separate rockers 101, and are normally all kept in engagement by a bail 112, which is subject to the pressure of a spring through an extension 113, Fig. 45. But, during actuation, the bail is kept off because the extension moves over a flange 115 on a fixed bar 114, while a fixed cam bar 104, Fig. 66, performs the same function as the bail, and also lifts each rocker in succession so as to prevent carrying from left to right. The counting-gear is set anywhere along the slide to suit the position of the printed column. By means of the rock-shaft 75, which bears arms 76, 77, 80 and another, and is operated by cams 46, 50, Figs. 20 and 21, the long pinion 33 and the last wheel 68 of the train are unlocked just before they are rotated, and are relocked just after they have been rotated; the short arm 78 encounters a stop limiting the play.

15,776. Goldberg, H. E. July 15. *Drawings to Specification.*

Calculating-apparatus.—The Specification and drawings are the same as those filed with the preceding case, No. 15,775, A.D. 1902, except as to the claims.

© B O B Williams Printed22/11/2023 CalcPatents Ed. 1.doc

Goldfarb & Drusin 20028/1908 Chain adder

20,028. Goldfarb, N. J., and **Drusin, A.** Sept. 23.

Calculating-apparatus.—In a stylus-set-and-operated adding-machine having an endless chain for each denomination passing over the adding-wheels, improvements are described in connexion with (1) the transfer mechanism, (2) the locking-means for the chains, (3) the zeroizing-mechanism and its connexion with the transfer parts, and (4) the means for giving the number of items added. Figs. 2 and 6 are sectional elevations of the ends of the machine and Fig. 8 is a

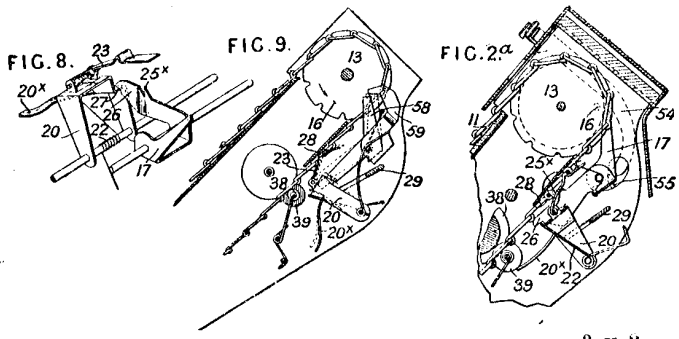

Golding H A 8196/1907 Slide rule for steam

8196. Golding, H. A. April 9.

FIG. II.

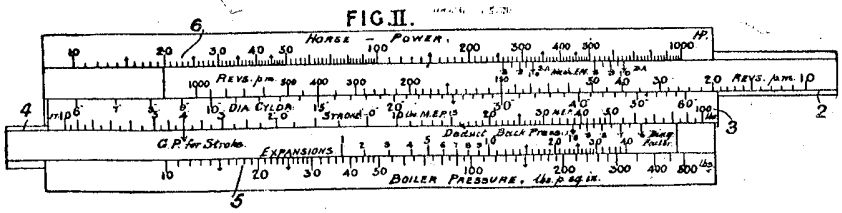

Slide-rules.—Relates to slide-rules for determining the indicated and brake horse-powers of steam, petrol, &c. engines from the dimensions, boiler pressures, and other data. In the three-slide rule shown in Fig. II, the stock is provided with scales 5, 6 representing respectively boiler pressure and horse-power. The slides 2, 3, 4 are graduated to denote revolutions per minute, cylinder diameters, piston strokes, mean effective pressures, diagram factors, and expansion ratios. Auxiliary graduations are provided for adjustment to the mechanical efficiencies of single and double-acting engines. A second form of rule, having two slides, enables the horse-power of a petrol or other motor to be obtained from the diameters of cylinders, the length of stroke, the number of revolutions, the number of cylinders, and the cycle employed. In a third form, having one slide, the brake horse-power may be determined from the diameter of the brake-wheel, the load, and the number of revolutions.

Goldman H 10237/1899 Stylus, chain The Arithmometer

10,237. Lorrain, J. G., [*Goldman, H.*
May 15

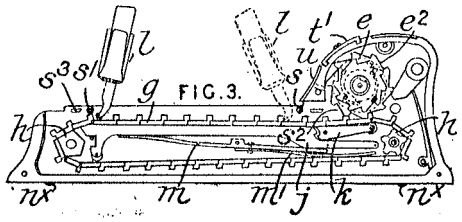

Calculating-apparatus.—The apparatus is adapte for use on an account book, along a page of whic it can run on rollers $n^{\times}$, $n^{\times}$. The apparatus actuated by pressing a stylet l into the teeth c a chain g at a point indicated by scales at either side of the apparatus, and moving the style till it strikes the roller s^1. There is, of course, a separate chain for each denomination, and the

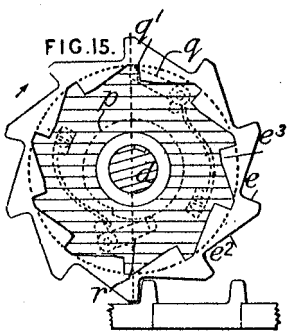

denominations may be distinguished by colours. To allow of both addition and subtraction being performed, the two scales at the sides are marked $^{0}9$, $^{1}8$, . . . $^{9}0$, and 9^{1}, 8^{2} . . . 0^{10} respectively. A cross-bar, adjustable over the chains at right-angles to them, limits the movement of the style when, as in multiplication, the same movement has to be made repeatedly. Graduated shutters, parallel to and over the chains, may be so adjusted as to cover one or more chains and divide the machine into two or more separate machines; these are used for such calculations as are required by the English currency. The aperture or slot through which the results are read is also fitted with a sliding shutter t^1, and a sliding pointer u for use as the decimal point. The results are shown by ten-toothed numbering-wheels e on the sloping faces e^2 of which the numbers 0 to 9 are marked. These wheels are normally out of engagement with the chains g, but the pressure of the style acts, through the levers j, k, to throw the chain forward at the end as shown in the Figure, slack being taken up and the parts restored to normal position when the style is removed, by the springs m, m^1. Over-driving is prevented by the engagement, in normal position, of teeth on the chain between the stops s^2, s and s^1, s^3, and by the lever k entering a notch in one of the two chain-wheels h, h. The mechanism for each denomination is separated from the next by a partition.

Counting-apparatus.—For the purpose of "carrying" and "zeroizing," the following arrangements are provided:—Each wheel e, Fig. 15, is recessed on one side to form a space bounded by inturned teeth e^3, and on the other to form a circular depression in which are pivoted the spring pawls q, r. The partitions are cut away so as to form a cam-shaped aperture round which the projection q^1 on the pawl q travels. At each rotation of any wheel e the cam allows the projection q^1 to engage a tooth e^3 of the next wheel and advance it one tooth-space, after which the pawl is again withdrawn. The pawls r are for engagement with single-toothed cams p which, on turning an external button on the spindle d, pick up all the pawls and push the numbering-wheels to zero; a spring catch then arrests the turn-button.

See[19]

Gomila S De 5483/1905 Multiplier

5483. Gomila, S. de. March 15.

Calculating-apparatus ; counting-apparatus. — In a double-keyboard multiplying-machine, the adding-keys give a variable throw to a pivoted yoke-piece which actuates a setting-wheel moved by hand to gear with the counting-wheels of the different orders, and the multiplying-keys similarly operate means for repeating this registration a given number of times, zeroizing and transferring arrangements being described for the totalizing-counter. Figs. 1 and 3 show in end elevation and plan, respectively, the adding key-levers 5 and multiplying key-levers 6, all having the same throw but arms of different length so as to produce the required differential motion of the tapering yokes 13, 14. Adding is effected by the upward movement of a sector 20, pivoted at 21 and driving through a ratchet clutch the shaft 23, upon which is keyed a slidable master setting-pinion 26 provided with a guide 27 and an indicator. By means of an endless chain 31 passing over pulleys, one of which is provided with a hand ratchet-feed equal to the distance between two counting-wheels, this setting-pinion may be traversed along a slot in the front of the machine so as to gear with counting-wheels of different orders at will. A second sector 61, also loosely mounted upon the shaft 21, gears with another pinion on the shaft 23 and is controlled as to position by an overlapping pin 74 upon the first sector and a spring arm 73 projecting from the first under the second sector. It is actuated from the multiplying-yoke 14 by means of the linkwork shown and the segment 58, driving a cam-wheel 57, the teeth of which depress the sector to its zero position as they pass the roller 63 on the extension 62. The operation is as follows :—Each multiplication is performed between two digits only, the first digit being registered once by depression of the proper adding-key, which is then held down, and upon depression of the multiplying-key corresponding to the second digit the cam-wheel depresses the sector 61 that number of times less one. Upward motion of the sector is effected by the spring 73 and limited by the pin 74 upon the first sector, so that at each upward movement the original digit is registered on the counter. A hinged flap 69 with an india-rubber ball 70 is provided for attaching the machine to a table so that it may hang over the edge. The spring arms 47 upon the main counter spindle 40 and recesses 48 in the numeral-wheels are for zeroizing the counter upon rotation of the spindle by means of the head 41 ; but when the motion of the shaft is reversed, the springs are thrown out of engagement by the fingers 46. Transferring is effected by the pin 52 engaging the arm 50 about its shaft 49, so as to feed on the next higher wheel by means of the spring pawl 53.

FIG.3.

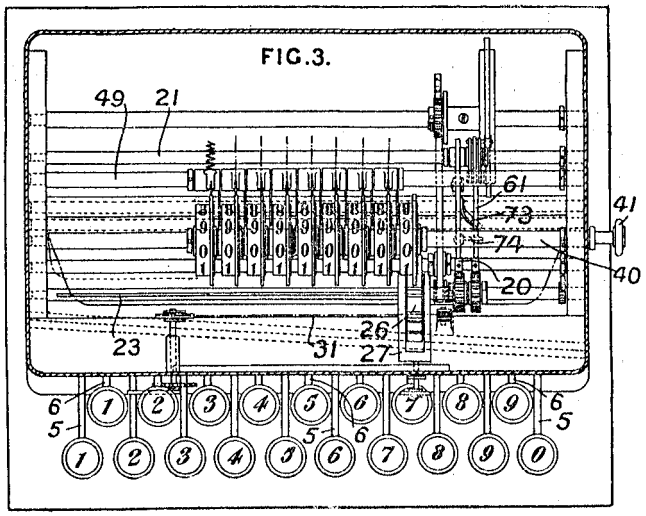

FIG.1.

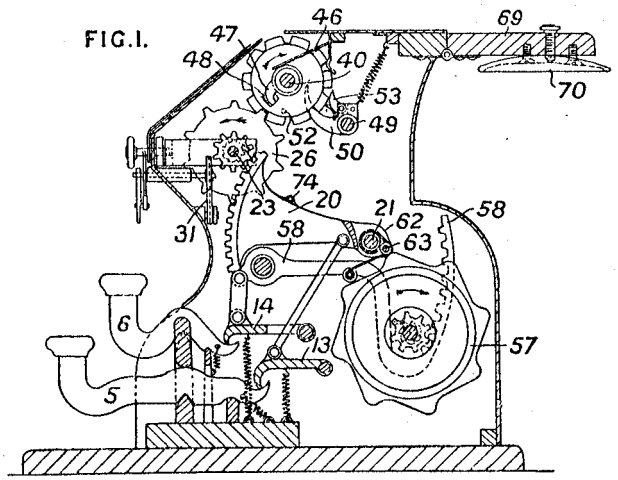

Goldman H 4382/1908 Chain adder

4382. Goldman, H. Feb. 26.

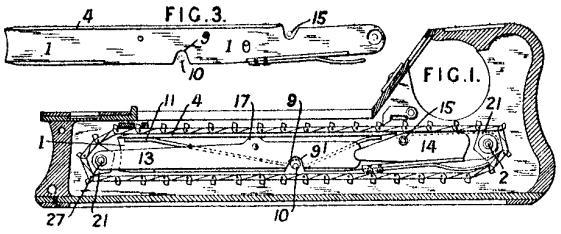

Calculating-apparatus.—In adding-machines actuated by means of a series of endless chains carried on rollers, the chains are supported and guided by a lever 1 formed with flanges 4, Fig. 3, and pivoted on the axis 2 of chain-wheels 21. The lever is held normally raised by a spring 11 carried by a pin 10, and it is provided with a notch 9 to allow of depression. The chain is raised into engagement with the counting-wheels by a lever 14 pivoted on a rod 15 carried by the framework, motion being communicated from the lever 1 through an intermediate lever 13 pivoted on the shaft 27 of the second chain roller and on a pin carried by the lever 1. A notch 9^1 is formed in the lever 13 around rod 10, and the lever 13 is recessed at its end to engage the lever 14. Motion is communicated to the lever 13 from the lever 1, which is depressed on the insertion of a pointer, by the engagement of a boss 17 with the flange 4.

Goldman H 17969/1908 Chain adder

17,969. Goldman, H. *Feb. 26.*

FIG.1.

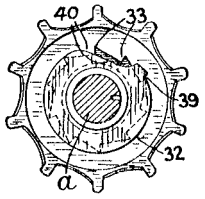

I

FIG.2.

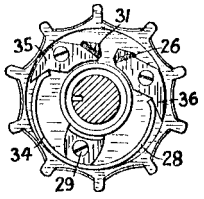

Counting - apparatus. — In calculating - machines provided with chains travelling over rollers and moving independently of one another, the transfer and return to zero of the numeral wheels is effected by two pawls 35, 36 provided with projections 31, 26 and controlled by a spring secured to the drum at 29 and provided with two arms 34, 28. The projection 31 on the travelling pawl 35 is made long enough to project over the surface of a cam 32 secured to the drum shaft *a* and engage with a ratchet-wheel 33 on the next drum when it reaches a notch 40 on the desk, while the projection 26 does not extend past the edge of the disk. To return the drums to zero, the shaft *a* is turned in the direction of the arrow I until a projection 39 on the cam-disk engages the projection 31 and returns it to the zero position.

FIG.3.

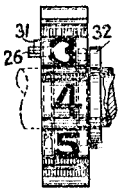

83

Goodacre S 3231/1883 Local time

3231. Goodacre, S. June 29.

Indicating local time.—Relates to indicators for showing the corresponding time of day at various principal places, and consists of a series of dials grouped together, each having a hand or hands worked from a common centre or centres of

939

motion, by means of one or two knobs, keys, or handles, or their equivalent, so as to travel

FIG. 1

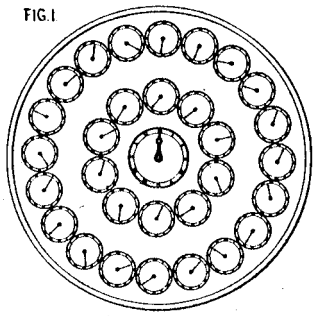

synchronously with each other at their proper relative angles. In addition to the names of the various towns &c. each dial may be engraved with telegraphic and other suitable information. Reference numbers may be employed in lieu of names, a separate index table or reference key being provided.

Goodman J 6087/1890Planimeter

6087. Goodman, J. April 22.

Calculating-apparatus.—Relates to improvements on "Stang's" planimeter, which consists of a rod with terminal legs in the form of a point A and wedge B. In use, the point A is led from an approximate centre C^1 round the area to be ascertained, while the wedge B is gently pressed on the

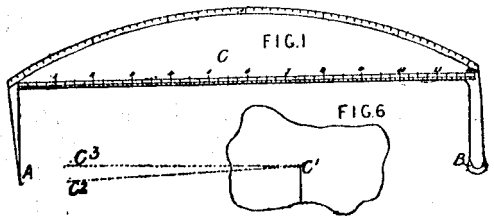

paper so as to give terminal positions C^2, C^3. Twice the sector C^1, C^2, C^3 is taken as the required area. The instrument is now provided with a curved or straight scale C by which the area is read directly without calculation.

See[12]

Goodman J 407/1891 Planimeter

407. Goodman, J. Jan. 9.

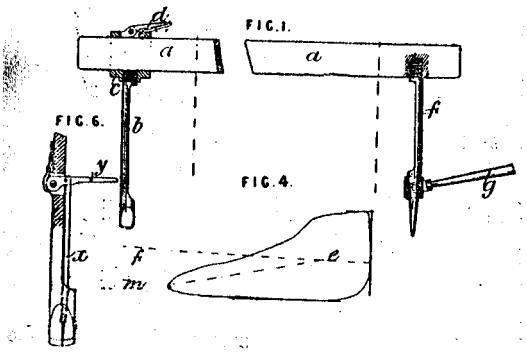

Calculating-apparatus.—Relates to the instrument known as the Stang planimeter, which consists of a beam *a* provided with a tracer *f* at one end and a marker or hatchet *b* at the other. The centre *e* of the irregular area, Fig. 4, to be ascertained is guessed at, and while the tracer makes a circuit from this point round the boundary line and back to the point again the hatchet is gently pressed on paper in the same plane. The required area is a function of the beam length and the distance between the initial and final position *f*, *m* of the hatchet. If the beam has the same length as the rectangle enclosing the irregular area the calculation is simplified. The invention provides for this by making the hatchet *b* adjustable along the beam with a sliding collar *c* having a spring friction detent *d*. The stems of the hatchet and tracer are flattened to give correct register with the sides of the rectangle. The hatchet may be provided with a central needle *x*, with lever *y*, Fig. 6, to determine definitely the terminal positions, and the tracer is provided with a loose removable handle *g* to ensure free movement.

[11]

Goodwin H 9585/1897 Computing scales for printer's work

9585. Goodwin, H. April 15.

Computing-scales.—A scale for casting-up printer's work or the like consists of a wood, ivory, or other strip *a*, with grooved and bevelled edges, marked on its upper surface with scales corresponding to

2

different sizes of type, and inches, and on its edges with pica scales. A pointer *b* formed of sheet metal slides on the surface, and parts of the metal are bent over to hold a slotted plate *d*, which is marked

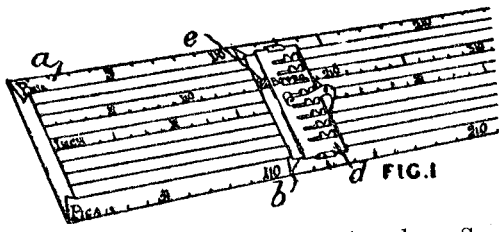

FIG. 1

with the names of the adjacent scales. Small plates of metal *e* slide between the plates *b*, *d*, to indicate the scale in use; tongues bent down on the plates *e* form friction springs, and parts bent up project through the slots to afford means for moving the plates *e*. In a modification, the scale names are marked directly on the pointer plate, and the indicators are dispensed with.

Goold W T 16807/1892 Slide rule with second slide

16,807. Goold, W. T. Sept. 20.

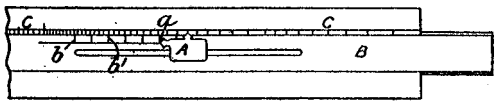

Calculating-apparatus.—Relates to slide-rules and other calculators. The slide B is fitted with one or more indicators A, which slide in a slot, and can be set to one or other of the marks b, b^1. These correspond to any desired formulæ, and the indicator when set shows the result on the scale C. The pointer may be mounted on the rule itself, which then carries the marks indicating different formulæ to which the pointer is to be set, and the slide the result scale.

Gorin F P 3764/1907 Adder

3764. Gorin, F. P. Feb. 15.

Calculating - apparatus. —In a single-bank, key-set machine for addition and subtraction, the operation is derived from the lateral spacing motion of the spring-impelled, denomination-selecting carriage, which at each step rotates the main counter spindle through an angle proportional to the value of the key last depressed; all the numeral wheels are normally locked to, and rotate with this spindle, but the particular wheel which is receiving is disengaged and held stationary, and it is therefore necessary when reading the total to adjust the spindle to its initial position. Improvements are also described in the

FIG. 1.

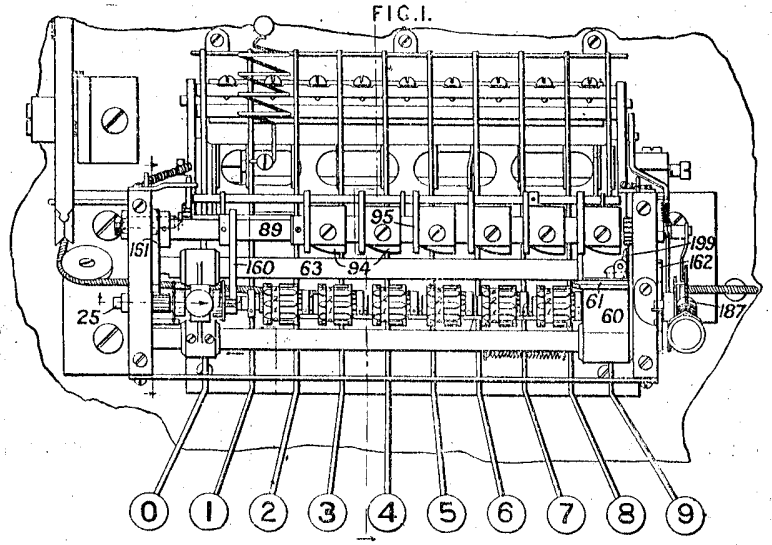

468

Goudie W J 15527/1899 Slide rule for steam engines

15,527. Goudie, W. J. July 28. *Drawings to Specification.*

Slide-rules.—The apparatus is for performing the calculations required when adjusting or designing the proportion of compound or multiple-expansion engines. It consists of two parts of like mechanical construction but differing in the arrangement of the scales, each part having two adjacent slides working on a base so as to allow of three sets of relatively-movable scales. The two parts may be on opposite faces of one rule, and the scales are arranged for synthetical and analytical calculations respectively. A special collocation of logarithmic and evenly-divided scales is set out in the Specification, together with examples of the calculations which refer to the cut off, mean effective pressure, ranges of temperature and pressure, horse power, and other characteristics of the actions of compound or multiple-expansion

Graham R W & France J J 10853/1904 Tab calc Date or Interest

10,853. Graham, R. W., and **France, J. J.** May 11.

Calculating-apparatus.—In a date or interest calculator, shown in plan in Fig. 2, two wide-rimmed wheels A, A[1] are mounted close together on a horizontal spindle B, about which they are free to turn. The spindle is supported by two vertical brackets D screwed to a base-plate, and the wheels are kept together by a spring C placed between one of them and the adjacent bracket. Lithographed or printed tables are fastened to the rims of the wheels, by moving which the tables can be relatively adjusted.

FIG. 2.

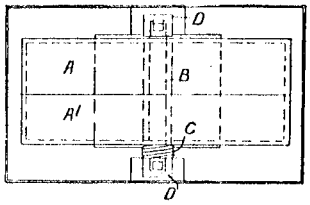

Graham T 112822 of 1917 Ship stability

112,822. Graham, T. Jan. 26, 1917

Calculating - apparatus for investigating ships' stability problems gives (1) the metacentric height or G.M., (2) a measure of the righting-arm or lever of transverse stability when the vessel is heeled over through any angle, and (3) the position of the water-line relative to the freeboard deck edge as the vessel is heeled over, and comprises (a) an apparatus for indicating the righting - arms and the water-line, and (b) a device for use therewith from which the metacentric height may be obtained. The apparatus (a) consists of a wood or metal lamina T representing the midship section of the vessel pivoted at a point *f* corresponding to the mean position of the centre of curvature of the curve of flotation, the pivot being secured to a standard X carrying a pointer *p* moving over a scale to show the angle of heel. On the vertical centre line of the lamina is a scale of feet graduated from the keel upwards over which moves a pointer *t* mounted in a slot *s*. To the point of the part *t* is pivoted a rod *n* indicating the resultant of gravity when the pointer is set to the metacentric height. One of a series of plates M representing the metacentric evolute for different displacements is secured by pins *m* and held in position by a blade-spring J. A plumb-line W passing over the edge of the plate represents the resultant line of the buoyancy and the distance between these two verticals read on a scale of feet Z carried by the part *n* shows the magnitude of the righting-arm. The water-line is shown by a thread S passing across the front of the device and secured to a rod Q adjustably mounted in a slot in the standard.

FIG.1.

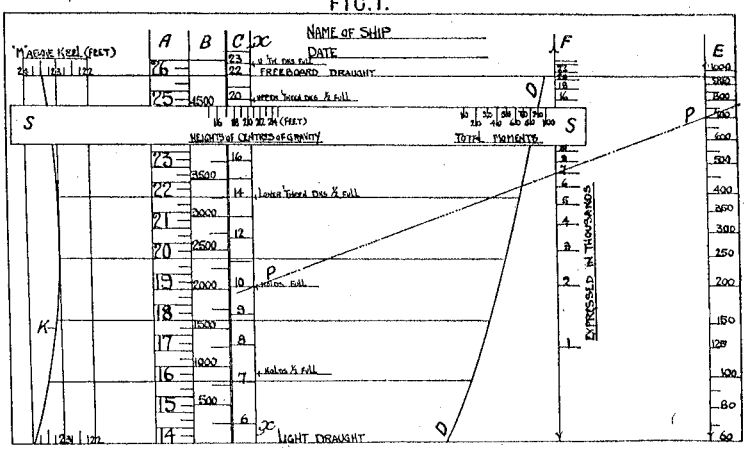

Metacentric calculators; logarithmic calculators. —The device (b) comprises a chart bearing two linear scales A, B showing the draught in feet and the dead weight in tons and a logarithmic scale C representing height in feet of the centres of gravity of the cargo above the keel. Co-operating with the scale C are two similar scales E, F, representing respectively dead weight in tons and the moment about the keel, so arranged that the moment in foot tons is obtained by the inter-

© B O B Williams Printed22/11/2023 CalcPatents Ed. 1.doc

Grant H C J 22117/1913 Plotting board

22,117. Grant, H. C. J. Oct. 1.

Plane-trigonometry calculators; computing by plotting.—Consists of a modified form of the plotting - board described in Specification 9145/07, [*Class* 97, Philosophical instruments]. The dial A, having a graduated rim *a*, is surrounded by a revoluble ring *c* to which is secured an arm acting as a guide for the graduated T-shaped cursor *d*, which can move along the diameter of the ring *c* passing through the zero of the vernier &c. *e*. On the cursor are the radial scale *h* and the transverse scale *j*, the units of these two scales being of the same length. The scale *h* is read against a mark h^1 on the ring *c* and the scale *j* is graduated on each side of a zero which is at the centre of the dial when the zero of the scale *h* is opposite the point h^1. The ring *c* also carries the verniers *f*, *g*, at 180 degrees apart. The instrument can be used for solving various problems in navigation by plotting.

(*For Figure see next column.*)

22,117.

FIG. I.

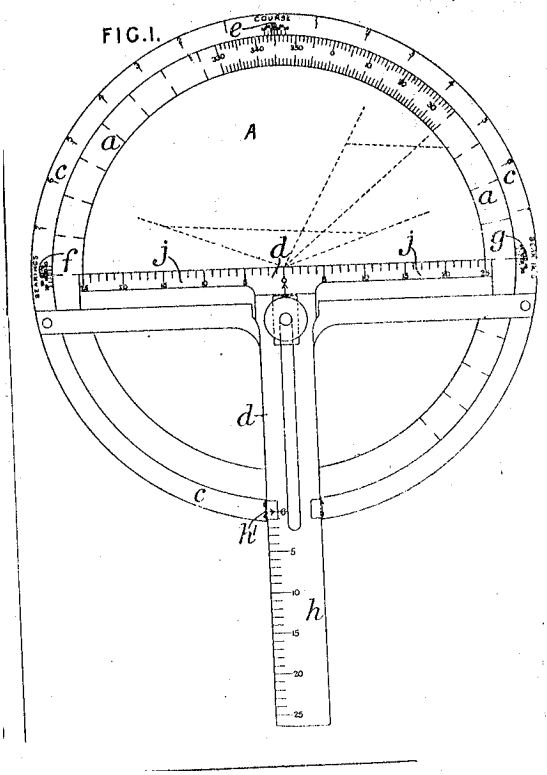

Grantham A M 20218/1899 Gauge & Tab calc for paper sheets

20,218. Grantham, A. M. Oct. 9.

FIG. 1.

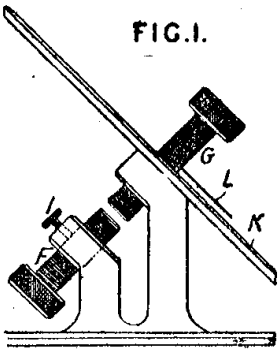

FIG. 3.

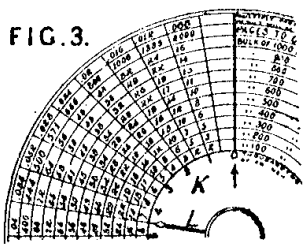

Calliper and like gauges; calculating-apparatus.—The apparatus is for determining from the thickness of one sheet of paper the thickness or weight of a given number of sheets, or for making similar computations. The single sheet is grasped between the two screw jaws F, G, of which the former is adjustable for wear, temperature, &c., and is then clamped by a screw I, while the latter is fitted with a pointer L travelling over a computing-scale K. The graduations are marked in the spaces formed by a series of concentric circles and radii, a portion of the scale being indicated in Fig. 3. The pointer L is indicating that in a packet of sheets of paper ·0045 of an inch thick, there will be 444 pages to the inch, and that the thickness of 1000, 900, ... 100 pages will be respectively 72, 65, . . . 7 thirty-seconds of an inch.

Grard H J B 3501/1915 Area of skins

3501. Grard, H. J. B. March 31, 1914, [*Convention date*].

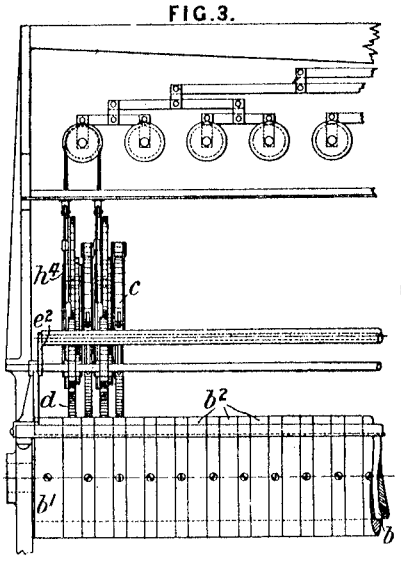

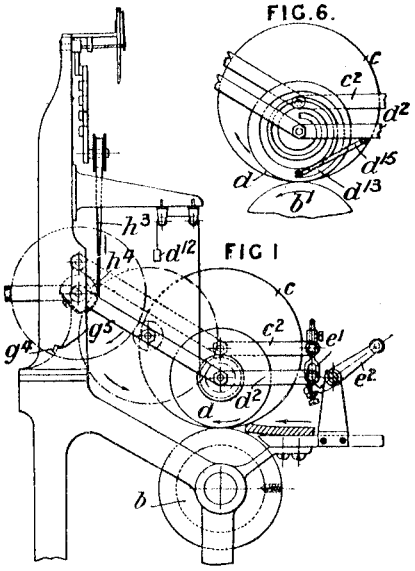

Surface areas, computing.—In an apparatus for measuring the surface of skins &c. by summing rotations of co-axial measuring-wheels, the non-driven feed-wheels c are of larger diameter than the measuring-wheels d. These wheels coact with a drum b provided with loose and fixed rings b^2, b^1, and are mounted on a parallel-motion linkage c^2, d^2, a slot e^1 allowing the measuring-wheels to be lifted off the work by handles e^2. The motion of the wheels d is transmitted by toothed gear to a pulley h^4, which operates adding-mechanism of the Sawyer type. Back-lash is prevented by a weight d^{12} acting in conjunction with a stop g^4 on the gear g^5, which abuts against the frame. In a modified construction, Fig. 6, the stop g^4 is dispensed with, and the wheel d carries a helical track d^{13} in which runs a bowl carried by an arm d^{15}; the pull on the belt h^3 causes the wheel d to turn until the end of the track comes against the bowl.

Gray H 22445/1910 Multiply Napier's bones

22,445. Gray, H. Sept. 28.

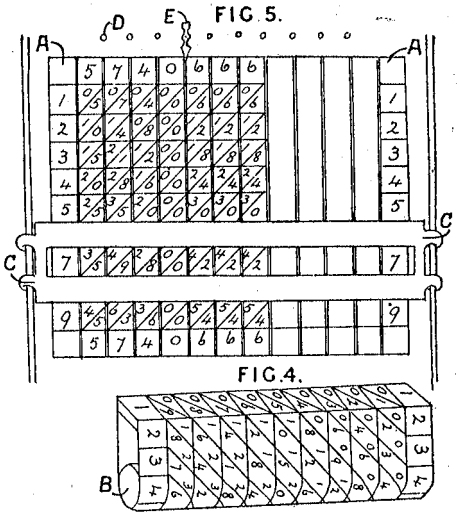

Multiplying and dividing apparatus.—An apparatus for facilitating the multiplication and division of numbers, in which the multiples of the digits are marked in columns on a series of continuous bands mounted on rollers B and adapted to pass over strips A, is provided with an improved means for mounting the rollers, means to indicate the position of the decimal point, and a cursor to facilitate the reading of the apparatus. The rollers B, for convenience in handling, are arranged in two planes, every alternate roller being in the same plane, and their milled heads are adapted to be pulled out to enable the rollers to be rotated. The end strips are marked with the numbers 1 . . . 9, and, to shut out the rows of numbers next the one under consideration, a cursor C is provided. The reading is taken from right to left, and the figures between the diagonal lines are added together. Above each strip is a hole D in the framework, into which a pointer E is inserted to indicate the decimal point.

Gray J 17115/1907 Solve problems in arithmetic & Algebra analogue

17,115. Gray, J. July 26.

Calculating-apparatus.—An apparatus for solving problems in arithmetic and algebra consists of a graduated L-shaped frame A or blackboard &c., to which is pivotally connected a slotted arm B. Along this arm slides an inverted L-shaped piece C the arms of which are retained in an approximately horizontal and vertical position. To solve a problem in proportion, the arms of the piece C are set to the two first terms along the scales and the arm B is clamped by the nut D. The proper arm of the piece C is then set to the third term, when the remaining arm gives the fourth. By substituting different scales, a large variety of probleme in reduction &c. can be solved.

(*For Figure see next page.*)

17,115.

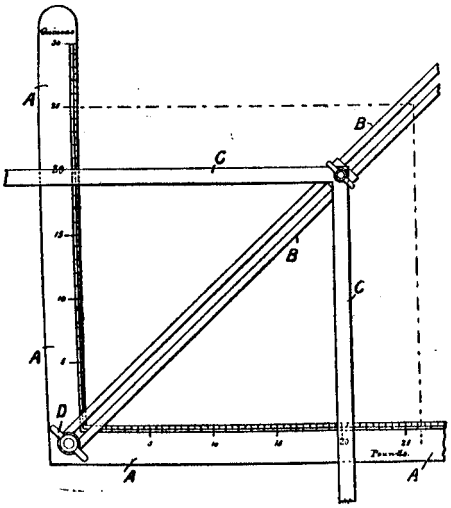

Grenon C 13548/1911 ASMD Money

13,548. Grenon, C. June 6.

Adding and subtracting apparatus for monetary values; transfer and zeroizing mechanism.—In apparatus for performing the four rules of arithmetic, the numeral wheels a, a^1 representing various monetary denominations are of the same size and are provided with serrated disks h, by which they can be manually operated, and with fixed indicating-members g. In either direction of rotation of the wheels, a transfer mechanism is operative; the mechanism comprises a spring-controlled lever l adapted to co-operate with a symmetrical cam n, and thereupon to rotate a toothed wheel attached to the next higher numeral-wheel. In a modification (not shown), a single-toothed transfer mechanism is employed. Detents for the numeral-wheels comprise rollers s engaging with the disks h, mounted on spring-controlled levers o. These rollers may actuate the transfer levers l. Zeroizing-mechanism may be provided comprising means for releasing the detents s and weights or springs for returning the numeral wheels to their zero position.

FIG. 1.

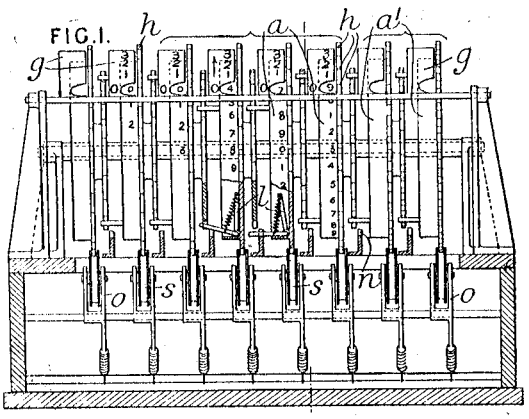

Grimme Natalis 2318/1894 Receipts checking & Recording

2318. Bradbury, C., [*Grimme, Natalis, & Co.*]. Feb. 2.

Receipts, checking and recording.—Indicating drum sectors *b* are geared to the calculating wheels through toothed sectors *s* and pinions and wheels *t*, *z*. Pawls *c* engaging the wheels *z* hold the sectors in any position to which they are turned, till a disengaging yoke *i* is operated by a lever K, when springs *r* return the indicating sectors to zero.

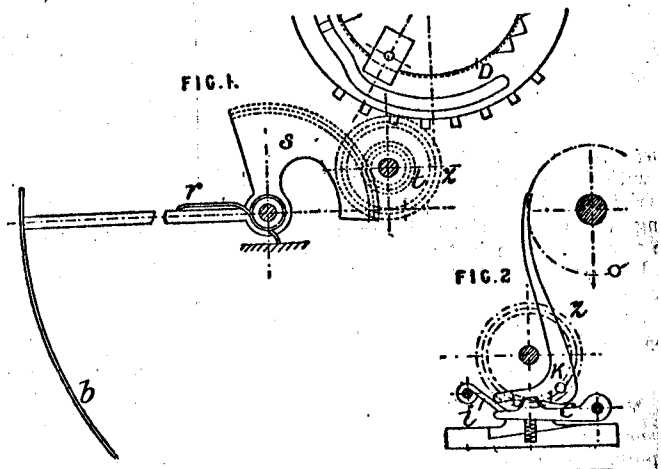

Grimme Natalis 24596/1909 Pin wheel

24,596. Grimme Natalis & Co., Kommanditges auf Aktien. Oct. 29, 1908, [*Convention date*].

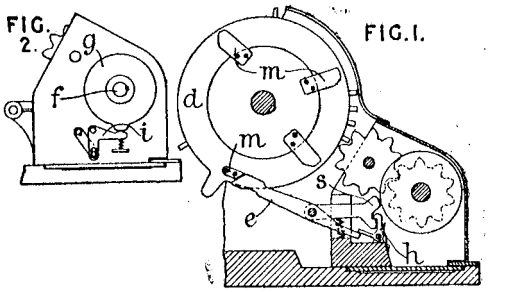

Multiplying-apparatus; zeroizing-mechanism. — Relates to calculating-machines of the pin-wheel

Gruner & Jalley 5755/1906 Tab calc

5755. Gruner, J., and **Jalley, W. J.** March 9.

FIG.2.

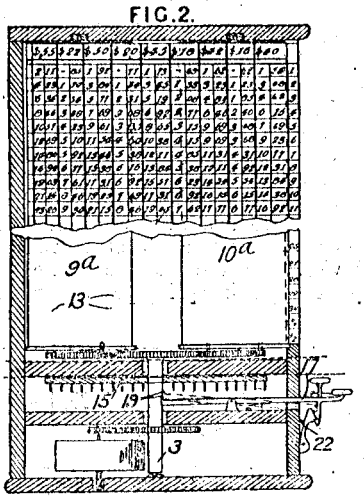

Calculating-apparatus.—A keyboard machine for multiplying, of the ready-reckoner type in which all the required products are marked upon an endless flexible sheet, is provided with a spring for rotating the sheet-bearing rollers under the control of stops set by the keys. The spring tends to drive a main spindle 3, mounted in the casing and having a plate 15 for the key-engaging stop pins, which may be in one of two spiral arrangements, and also a spur-wheel for driving the rollers 9^a, 10^a for moving the two sheets, which they grip by small pins 13. Each sheet is carried by one of the two front rollers and by another behind it (not shown),

Guthrie J 15062/1890 Adding board

15,062. Guthrie, J. Sept. 23.

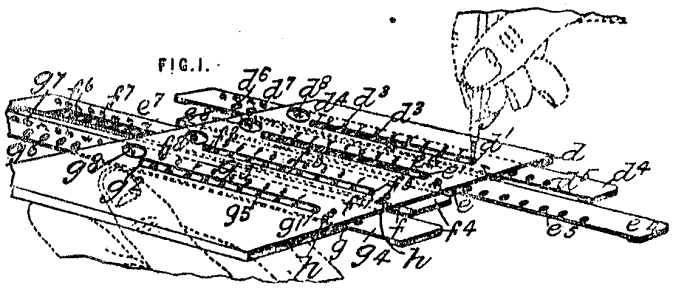

Calculating-apparatus.—Fig. 1 shows a perspective view of the machine for performing simple addition. A board *c* is pierced by parallel passages *d*, *e*, *f*, *g*, and surface slots d^1, e^1, f^1, g^1, marked at the sides d^3, e^3, f^3, g^3 with the nine digits and zero. The parallel passages guide a series of slides d^4, e^4, f^4, g^4, each pierced with twenty holes, of which the right half sets d^5, e^5, f^5, g^5 are on a light ground, while the left half sets d^6, e^6, f^6, g^6 are on black. The left ends of the slides are also marked with the nine digits and zero in lines d^7, e^7, f^7, g^7 registering with reading-holes d^8, e^8, f^8, g^8 in the board. As shown by the marking *h* the slides are used from right to left for units, tens, hundreds, and thousands respectively, the method being as follows:—A style *j* is inserted into the holes appearing through the slots against the numbers to be added, and the slide is pulled till the style is stopped by the ends d^1, e^1, f^1, g^1, if the hole is on the light ground. But if the figure to be added makes the total more than ten the style will be in the black part of the slide and is moved to the slot end d^2, e^2, f^2, or g^2 to expose the unit, while the ten is added in moving the next slide. With proper numbers of holes the machine is made applicable for compound addition. The construction may be modified by using endless bands instead of slides.

Guy F E 3551/1909 Multiply & divide Thomas type

3551. Guy, F. E. Feb. 13. [*Cognate Applications*, 11,891/09, *and* 16,063/09.]

FIG.2.

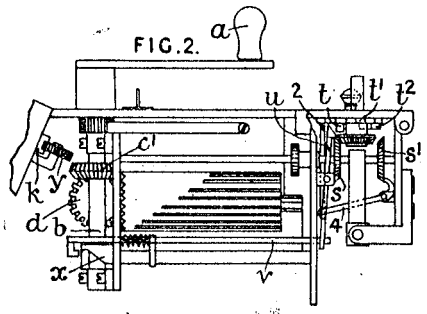

FIG.1.

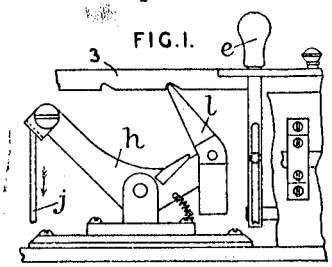

Multiplying and dividing apparatus.—Machines of the Thomas type, such as are described in Specifications 13,504/51, 65/84, and 27,364/03, are provided with means for operating, (1) the sliding numeral-wheel carriage or sliding plate either by foot-power, or by a connexion with the main operating-mechanism of the apparatus, so that it may take up its consecutive denominational positions; and (2) the reversing-lever, also by foot-power or automatically, to effect reversal of the operation from addition to subtraction.

(1) The sliding plate 3 is adapted to be raised and moved forward step by step by a weighted auxiliary lever *l*, Fig. 1, pivoted upon a main lever *h*, which is rocked by a flexible connexion *j* attached to a treadle or the like, or may be actuated, Fig. 2, through a rack and pinion *k*, *y* by the main operating-lever *a*. As each digit of the multiplier is reduced to zero by the operation of the lever *a*, a stud *t*, Fig. 2, on the particular disk t^1 of the multiplier-indicator, rocks the lever *u*, which moves the bar *v* so that the hooked end thereof engages with a cam-shaped projection *x* on the shaft *b* and raises the shaft. The double bevel-wheel c^1 is thereupon disengaged from the receiving-wheel *d* and engaged with the rack-and-pinion mechanism *y*, *k*.

(2) The reversing-lever *e*, Fig. 1, may be operated by means of a treadle, through a flexible connexion. Or reversal may be effected by a projection t^2, Fig. 2, extending beneath the set of figures for subtraction or division, which is placed around one half of the circumference of each disk of the multiplier-indicator t^1. When these special sets of figures are employed, the projections *t* automatically depress a rod or plunger 2 connected to the hooked lever 4, which engages directly the pair of bevel-wheels *s*, s^1.

Haack P 13094/1900 ASMD

13,094. Urquhart, R. J., [*Haack, P.*]. July 20.

Calculating-apparatus.—In a calculating-machine, a shaft 1, Fig. 1, in a casing 2, carries a segment 3 having nine stepped teeth as shown. A number of wheels 5, having ten teeth, can be slid along shafts 4, so as to bring them into the path of any desired number of the segment teeth, by means of knobs 7 moving along graduated grooves 6. When the discs 5 have been set to any number, and a rotation is given to the shaft 1 by bevel-wheels 9, 10 and a handle engaging a spring click at one point in its rotation, the number is registered on numeral discs 18 viewed through apertures 43. The discs 18 are enclosed by a casing 11, pressed by a spring 14 against the casing 2, and having in its inner periphery a number of slots, any one of which may be made to engage a pin on a bracket fixed to the casing 2 to allow the apparatus to be used for multiplying and dividing.

The discs 18, racking-back wheels 19, and setting-knobs 20 are carried by shafts 26, one less than twice as numerous as the shafts 4. The shafts 26

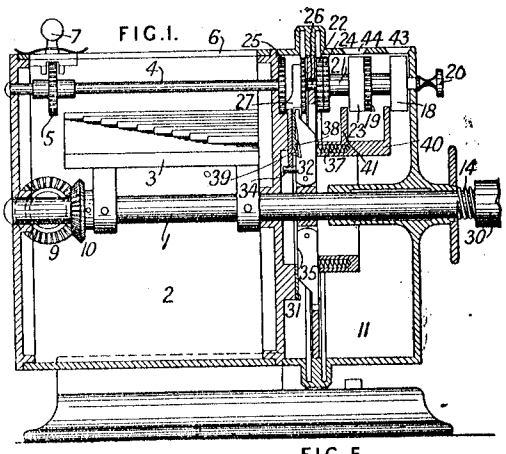

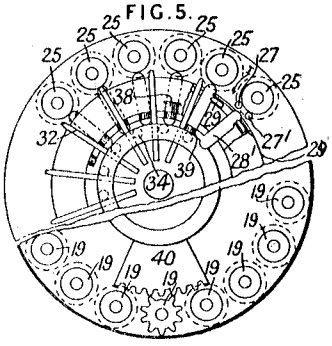

also carry bushes 21 with toothed wheels 22, quotient-registering numeral discs 23 numbered in both directions and viewed through openings 44, and racking-back wheels 24. Each shaft 4 carries a wheel 25 with ten notches adapted to be engaged by the end of a driver 27 on a wheel, with ten teeth, on the shaft 26. The bottoms of the drivers 27 are diametrically opposite the zeros on the discs 18, and, in passing from the position 27^1, Fig. 5, to the position 27, depress a slide 28^1 held in either of two positions by a spring bolt 29 and two notches. In this position a bead or swell 39 is lowered, opposite the wheel 25 of the next higher order, so as to come into the path of the corresponding pawl 32, normally pressed by a spring 37, Fig. 1, against an end plate 31, and bring it into engagement with the corresponding wheel and advance it by one tooth. The slide 28^1 is returned by a pin 34. The registration of the multiplications and quotients is effected by pawls 35 arranged between or at the end of the pawls 32, pressed against the end plate 31 by a spring, and pushed into engagement with the wheel 22 by an inclined projection 38. To bring the discs 23 and 18 back to zero, the casing 11 is drawn back against the cap 30 until the wheels 24 and 19, which each have one tooth missing, are in the path of the racks 41 and 40 connected to the shaft 1.

© B O B Williams Printed22/11/2023 CalcPatents Ed. 1.doc

Hadrich, Lamertz & Dreckmann 18296/1903 Adder

18,296. Hädrich, R., Lamertz, F., and Dreckmann, M. Aug. 24.

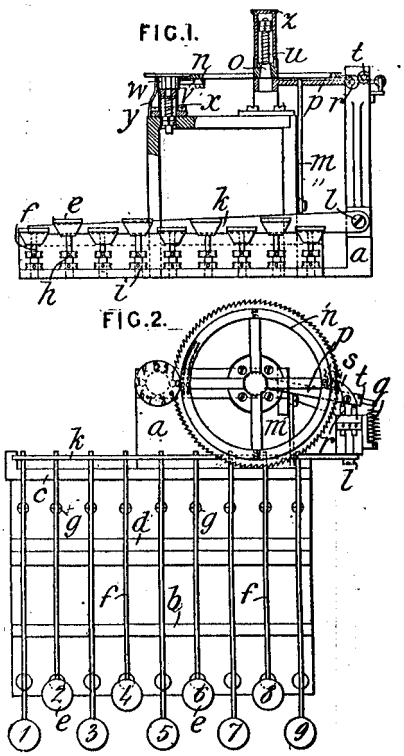

Calculating-apparatus.—In an adding-machine, depression of a number key causes a pawl to make a stroke of corresponding length, and thereby to move the tens and units disc, each column of the addition being treated separately. The frame *a*, Fig. 1, with guide-bars *b*, *c*, Fig. 2, carries nine number keys *e* on levers *f*, pivoted at *d* and held down at the distant ends by springs *g*. Depression of any key, the stroke of which is regulated by stops *h* and lock-nuts *i*, causes an angular motion of a common lever *k*, pivoted at *l*, which motion depends for magnitude upon the position of the key. The bell-crank lever *m* effects a corresponding motion of the arm *p*, Fig. 2, pivoted concentrically with the ratchet-wheel *n*, which carries numbers

Hafen J 21938/1896 Calc calendar

1896. **Hafen, J.** Oct. 3.

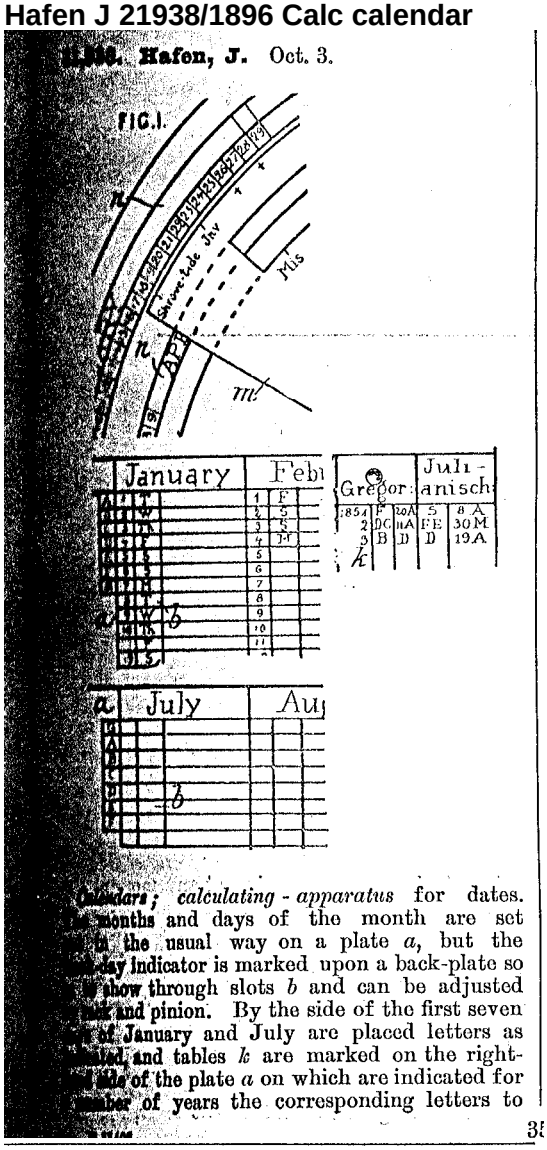

calendars; calculating - apparatus for dates. Months and days of the month are set in the usual way on a plate *a*, but the week-day indicator is marked upon a back-plate so as to show through slots *b* and can be adjusted by rack and pinion. By the side of the first seven letters of January and July are placed letters as shown, and tables *k* are marked on the right-hand side of the plate *a* on which are indicated for a number of years the corresponding letters to

which the first Sunday in January and July should be set by adjusting the back-plate. In ordinary years one adjustment is sufficient, but in leap years two letters are given in the table *k* to which the first Sundays in January and July must respectively be set. To render this possible, the week-day indicator for January and February is carried by a separate plate adjustable on the back-plate by rack and pinion. The table *k* is marked for both old and new styles and gives also the date of Easter day for each year. A rotating sector plate *m* carries the names of various movable festivals, and can be adjusted on a date scale *n* according to the date of Easter day given on the table *k*, so as to show the dates of such festivals. A part of the date scale, from the end of February backwards, must be capable of being adjusted independently the space of one day to allow for leap-years. Various other data of interest may be given in tables on the face of the calendar. The details of the arrangements may be modified, and the calendar is combined with removable memorandum sheets clipped to it and cut away, where necessary, so as not to interfere with the reading of the dates &c. The sheets are ruled to correspond with the calendar and are marked with the names of the months.

Hagemann H 5893/1887 System converter using screws

5893. Hagemann, H. April 22.

Calculating-apparatus.—Relates to means for converting one system of measurement into another. The apparatus consists of a long screw A driven in one direction by a handle B mounted loose on its spindle and carrying a pawl engaging with the teeth of a ratchet-wheel C fixed on the spindle. The handle B carries a pointer D moving over a circular scale E, while the screw causes a slide F, also provided with a pointer, to traverse another scale G. The pitch of the screw is adjusted so that the movements bear any required relation. The invention is particularly applicable to adding up the lengths of letters and words in composing, viz. expressing the number of typographical units in terms of the metric system &c. and obtaining the total space required for a certain number of letters and signs the dimensions of which in typographical units are known.

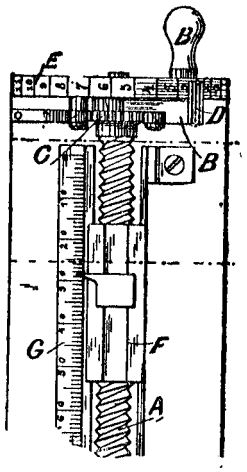

Hagey R J 16075/1900 Slide rule photo exposure

16,075. Hagey, R. J. Sept. 10.

FIG.1.

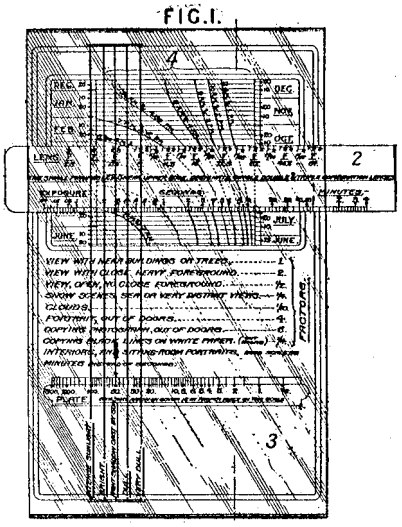

Slide-rules.—Relates to a device constructed on the principle of the slide-rule, for calculating the

)0

time of exposure of a photograph from the usual factors, namely, ratio of focal lengths to aperture, intensity of light, and sensitiveness of the plate. On the rear card is drawn a chart of curves 4, which determine the normal intensity of light at any given hour and date. The number corresponding to the ratio of focal length to aperture on the upper edge of the sliding scale 2 is set to the point indicating the intensity of light on the chart. Vertical lines, drawn on the transparent cover 3 of the card, indicate the deviations on each side of the normal light, which is marked by an arrow. The line selected marks the required time of exposure in tenths of seconds, on the lower edge of the scale 2. Numbers denoting the sensitiveness of the plate are marked on the bottom scale and the transparent cover 3 is displaced laterally till the arrow points to the sensitiveness of the plate being used, this of course, making a corresponding difference in the time of exposure read from scale 2. A number of factors for different subjects are marked on the scale, to enable the necessary correction of the result read from the scale to be made.

Haggarty J R 8644/1904 Calendar Date calculator

8644. Haggarty, J. R. April 15.

FIG. 3.

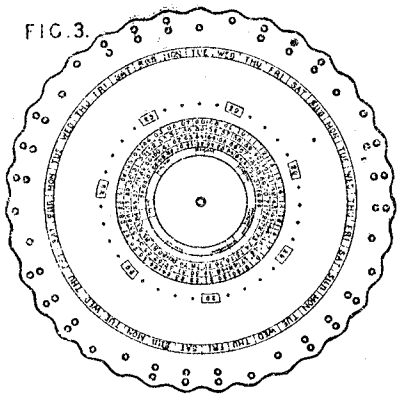

FIG. 4.

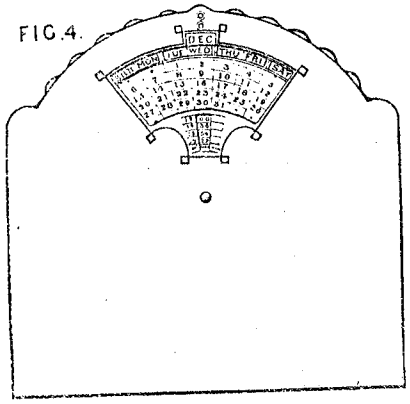

Calendars and date indicators; calculating-apparatus.—Wall calendars and date calculators are constructed so that only when correctly adjusted can they be hung up, there being otherwise no through hole for that purpose. The apparatus consists of a cover-plate, Fig. 4, behind which two discs are mounted so that they can be rotated independently. On one of these discs are five spiral rows divided by thirty-five radial lines. One of the spiral rows contains the numbers 1 to 28, another the numbers 1 to 30, and the other three the numbers 1 to 31 in each. In suitable positions relative to the spiral rows are the names of the months, arranged in an outer circular row. Under this disc is the disc shown in Fig. 3, having the days of the week repeated five times in an outer circular row, and the years of one century arranged in four smaller circular rows, leap years being repeated. In line with each radial column of years are two holes or eyelets near the edge of the disc, forming two circles. For leap years, there is one hole on the inner of these circles for one column, and one hole on the outer circle for the other column. In the first-described disc, there are corresponding holes opposite the names of the months, on the inner circle for January and February, and on the outer one for the other months. Two eyelets or holes are also provided in the cover-plate. Suitable apertures are formed in the cover-plate and upper disc to allow the necessary figures and names to be seen. In leap years, the first space containing the number of the year is placed so as to be visible during January and February, and the second space during the rest of the year. Unless this is done three eyelets will not register in either circle. Beyond the end of the spiral row of numbers terminating in 28 is an aperture through which the figure 29, suitably positioned on the under disc, can be seen when the calendar is adjusted for February in a leap year. On the year-disc and inside the numbers of the years may be positioned the numbers of the last years of other centuries, tables of corrections being also provided so that any date may be found.

Hagyi-Ristic & Duffek 1679/1902 Cubes on shafts

1679. Hagyi-Ristic, C., and **Duffek, A.** Jan. 21.

Calculating - apparatus. —In an apparatus consisting of cubical blocks *a* marked on their faces with the digits or other signs and mounted to turn on shafts *c*, a plate *d* backed by springs *f* is put behind to set the blocks square, or the same end may be attained by making each shaft of an elastic cord or of a spring, which, by its tendency to straighten, presses the block against the casing *b*.

FIG.4.

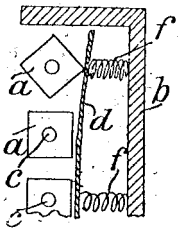

Hall C G 6748/1906 Single disk adder

6748. Hall, C. G. March 21.

Calculating-apparatus.—A single-disk adding and subtracting apparatus, operated by a style or by the fingers, is provided with means for indicating complete revolutions of the disk, consisting of

differently coloured sections upon the zeroizing-cord. The disk D bears numerals upon its face arranged in a number of concentric circles so as to show through the slot S; thus there may be

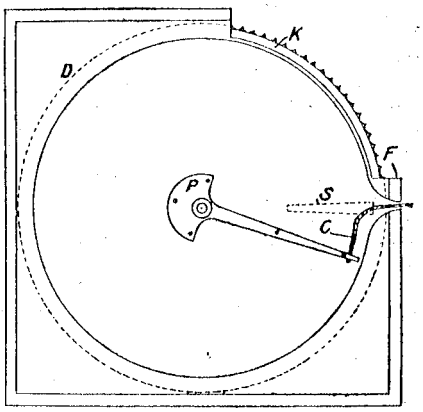

abstract numbers in one circle, and their equivalents in monetary values, weights, or measures in another. There may also be numbers for different revolutions in separate circles, say from 1 to 100 in the first and from 101 to 200 in the second circle, the figures corresponding to the different revolutions being distinctively coloured to agree with similarly coloured sections upon the zeroizing-cord C, which is attached to an arm on the semicircular pulley P and is wound up as successive numbers are added. The addition of an item is performed by placing the style or finger in the depression of the edge of the disk against that number upon the fixed scale K, which extends from 0 to 19, and moving the disk until the finger is arrested at the fixed stop F, there being one edge depression for each radial line of figures upon the disk. A leather pad rubs against the disk to steady its motion, and the zero-reading is restored by pulling the cord, which in a modification passes around spirally-arranged pins upon the disk. There may be a paper sheet upon the cover of the disk for listing numbers.

Hall D & Kay J H 25715/1899 Temperature correction for hygrometers

25,715. Hall, D., and **Kay, J. H.** Dec. 30.

Calculating-apparatus.—Relates to a means applied to a hygrometer for determining absolute humidity. Between the wet and dry thermometers *e*, *g* is arranged a compartment with a false bottom containing a cylinder *d* marked with a series of pairs of columns H, G, showing respectively percentage of relative humidity and absolute humidity. Each pair of columns is graduated to correspond to the scale of temperature at the edge of the slot *k* through which it appears, when the difference of the reading of the wet and dry thermometers is indicated by the number above the letters H, G. Thus, in Fig. 1, the thermometer readings differ by 10, and the pair of columns corresponding to this difference are brought under the slot, and these show the relative and absolute humidity at, say, 85° to be 58 and 7·4 respectively. Hinged or sliding memorandum tablets are combined with the apparatus.

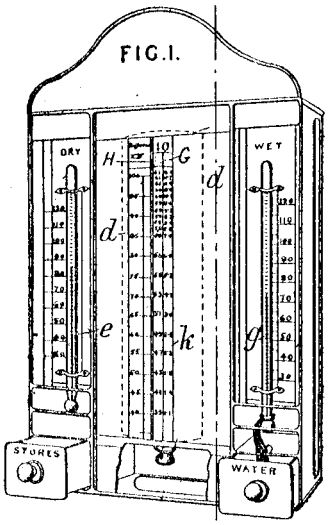

Halladay L P 10287/1899 Computing scale

10,287. Weighing-apparatus. HALLADAY, L. P., 718, Spencer Avenue, Marion, Indi U.S.A. May 16.

Value-indicating apparatus.—Fig. 1 shows the invention applied to an ordinary type of scale, the scale beam and computing-apparatus being shown in Figs. 2, 3, and 4. The scale beam B is provided with a spiral groove B^4 with which engages the poise D by means of two inwardly-projecting parts D^1, attached to an adjustable piece D^2. Suitable indicating-figures are carried by the movable cylinder A, which is provided with a part B^1 projecting beyond the casing C and is engaged by the parts D^6 mounted on the adjustable piece D^8. The material to be weighed being placed upon the scale, the end piece B^1 is rotated so as to move the poise to a position where the scale is balanced. In this position, the figures exposed through the slot A^2 in the casing indicate the value of the material at the price opposite such figures on the row of figures A^1, the weight also being indicated on the scale on the part B^1 and exposed to the view of the buyer through the glass piece C^1.

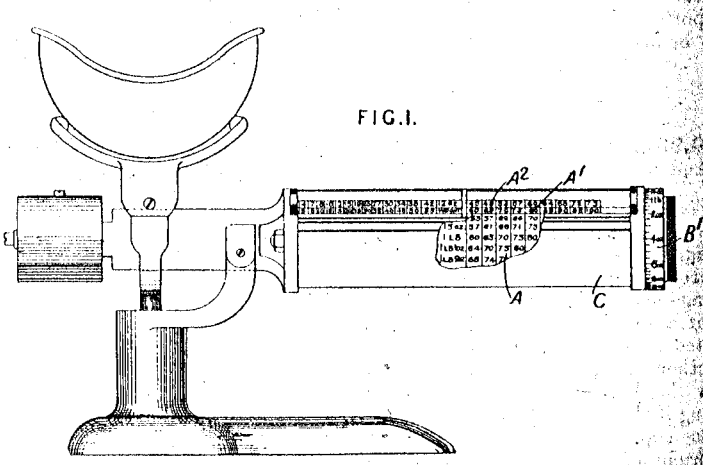

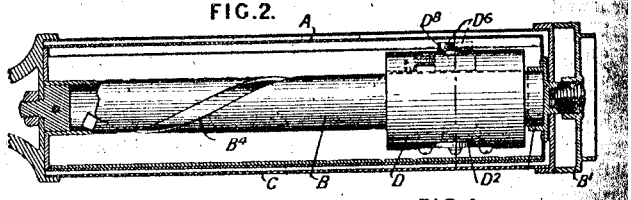

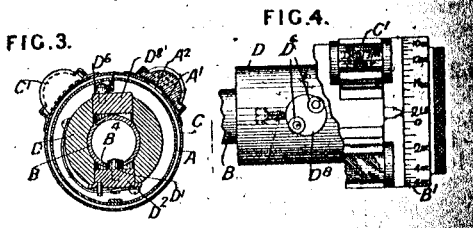

Halsey E 13298/1885 ASMD, taxes, Tabular device

13,298. Halsey, E. Nov. 3.

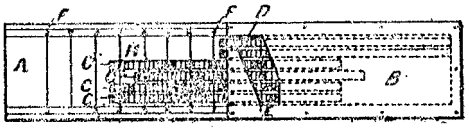

Calculating-apparatus for multiplying, dividing, adding, &c. The Figure shows the apparatus for calculating taxes &c. at a given percentage. The right half of a board A is covered by a plate B beneath which is a series of slides C that may be drawn out by their turned-up ends over the exposed left half of the board. In the plate B is an aperture D through which a portion of the slide may be seen, and across this aperture is stretched a thread E. The left half of A has marked upon it lines F numbered outwards from 1 to 9. When the slides are drawn out till a mark H on each one coincides with a line F, the tax on units, tens, hundreds, &c. of times the number of the line F is exhibited through the aperture D on the first, second, third, &c. slide counting upwards, and the thread E separates the whole numbers from the decimals. Adding up therefore the numbers shown in the aperture on the slides drawn out gives the total tax on the total amount at the rate for which the instrument is marked. In the Figure the tax on 5455 is shown at 1·45 per cent. In a machine for multiplying, the arrangement of board and slides is similar but the lines F are placed close together at one end so that the plate B covers nearly the whole of A. There is no such aperture as D, but, instead, nine rectangular ones which are numbered from left to right, while the slides are numbered upwards, as before. The portion of slide shown in one aperture is divided into nine spaces. When the marks H on the slides coincide with the line F number 1 on the plate A the right sides of the apertures show on each slide the product of the slide's number into the aperture's number. To find, then, say, the product of 359 by 264, the 9th, 5th and 3rd slides are drawn out to lines F 1, 2, and 3 respectively. The sum in aperture 4, plus ten times that in aperture 6, plus hundred times that in aperture 2, gives the product required. Division may be as easily performed by the reverse process. For calculating interest there is an extra aperture at the end of the plate B through which is shown decimally on the slides when the marks H are at F 1, the interest on from 1 to 9 dollars, pounds, &c., for one day at 1 per cent. Interest on other amounts at other rates and for other times is easily found after first reducing to the equivalent amount for one day at 1 per cent. As adapted for adding, the instrument consists of a series of slides marked with consecutive numbers against a row of pits. Nine pits on each slide are exposed through an aperture in a plate above, and the counting is effected by pushing forward the slides with a pencil.

Hammond R W 2133/1910 Helical slide rule

133. Hammond, R. W. Jan. 27.

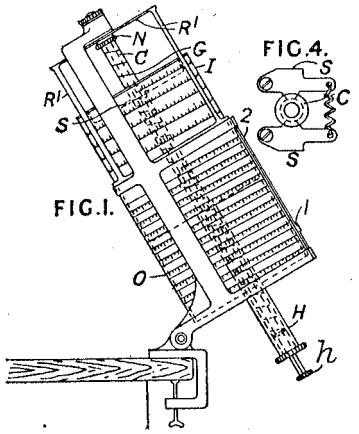

Slide-rules.—A spirally-graduated cylindrical ıle has an outer cylinder O, either wholly or ırtly transparent, through which the gradua- ɔns on the inner cylinder I may be observed. ıe inner cylinder I is adapted to move with ı endlong and a helical motion; the helical otion is effected by means of a groove G on ıe central spindle C, and a spring catch S hich grips the spindle C, as shown in Fig. 4. ıe spindle C is attached through a nut N to ıds R^1 secured to the outer cylinder O; and ıe catch S is mounted on the top of the inner ·linder I rotated through the handle H. To ljust the relative positions of the two cylin- ırs, the nut N is released, and the spindle C rotated; this adjustment allows any additional ales that may be provided on the inner cylin- ɔr to appear between the graduations on the ıter one. The whole apparatus may be rotated ' the handle *h*, which has a rod engaging the ·indle C. The inner surfaces of the two ·linders beneath the graduations may be lvered to ensure a correct reading of the ·aduations. An index or cursor 1 is adapted slide along a rod 2 attached to the frame to ıable the readings to be observed.

Hanks F A 8030/1915 3-D triplane plotter

8031. Hanks, F. A. May 31.

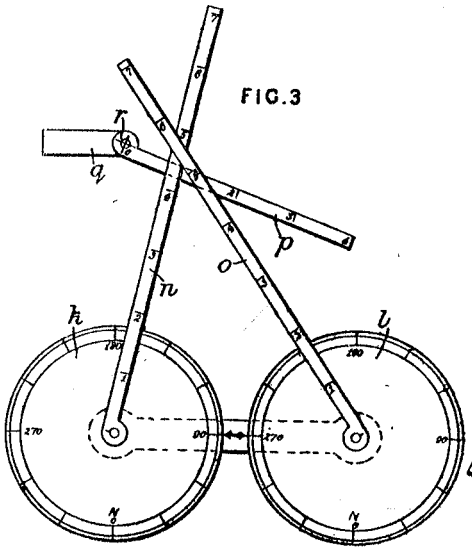

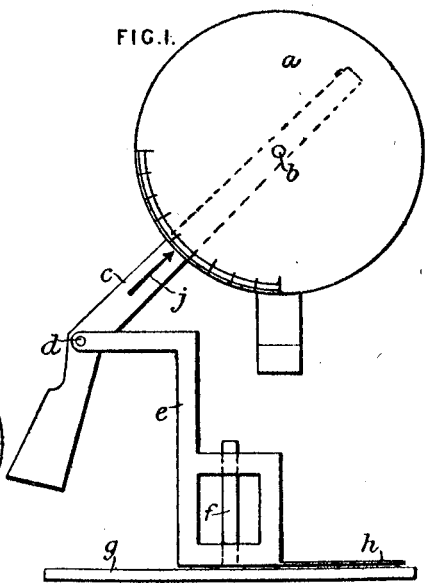

Plane-trigonometry calculators. — Relates to a device for measuring angles and plotting them, particularly with a view to finding the position in space of aircraft. In the angle-measuring device shown in Fig. 1, a weighted clinometer disk *a* is pivoted at *b* on a rifle-shape *c* mounted on a pivot *d* carried by a frame *e* free to turn about a vertical pivot *f* on a level stand or compass dial *g*. The disk is graduated, and the rifle-shape carries a pointer *j*. A pointer *h* is also attached to the framework *e* to record the horizontal angle. In the form shown in Fig. 2, a graduated quadrant *a* is provided with a rifle-shape *c* pivoted thereto at d^1, and is fixed to a vertical rod e^1 free to revolve in a socket k^1. A pointer *h* is hinged to the rod e^1 and is adapted to move over a dial g^1. In order to find the range and direction, the device shown in Fig. 3 is used. This consists of a pair of dials *k*, *l* set by compass and spaced apart to correspond to the base line, and having pivoted thereto graduated arms *n*, *o* which are set to the angles recorded at the ends of the base. The point of intersection gives the range, and an arm *p* pivoted at *r* to a piece *q* is set with its zero at *r* at the point of intersection ; a second observation is then made, and the arm *p* is set to touch the second point of intersection of the arms *n*, *o*. The arm *p* then gives the direction of motion of the object. If the target is an aerial one, a perpendicular rod *s*, Fig. 4, is set along a line o^1 corresponding with the horizontal distance on either of the lines *n*, *o*, and a rod *u* is set on the dial l^1 to correspond with the vertical angle ; the point of intersection then gives the height of the object.

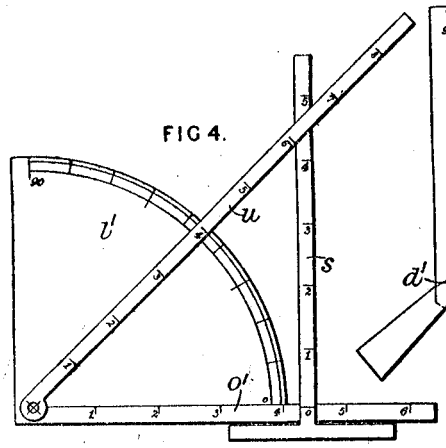

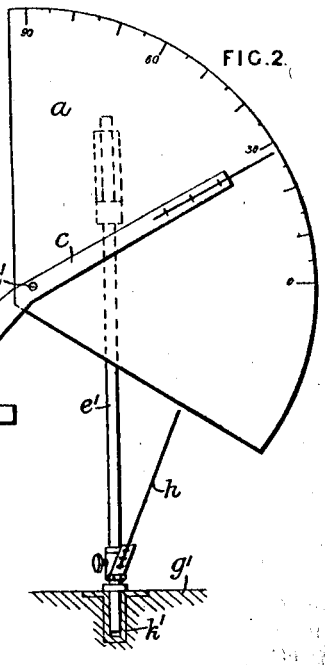

Hanmer H H 1423/1894 Tab calc for cotton prices

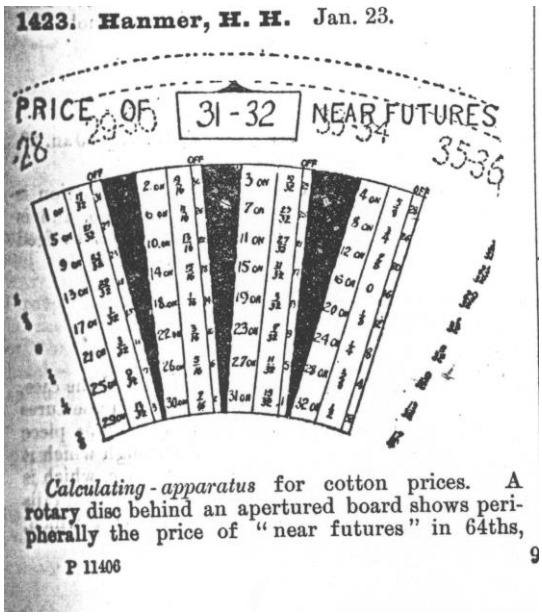

Harrison N 1884/1887 Navigation instrument

1884. Harrison, N. Feb. 7.

Calculating - apparatus. — Relates to an instrument for finding the position of a vessel without a compass from the given positions of three landmarks. Over a circle A graduated in points of the compass and angles, move three radial arms B, C, D, graduated from the centre to a scale of distances. On the arm C slides a graduated circle F, at the centre of which are pivoted arms G, H, graduated for distances like B, C, D. The mode of using is as follows: — The true bearings and distances from each other of the three landmarks X, Y, Z being known, simultaneous angles are taken from the vessel between the middle one Y and the other two landmarks. The arms G, H are then set so as to mark off these angles from the arm C. The circle F is then slid along the arm C and the arm turned till by trial the arms G, H cut the arms B, D at the known distances of Y from X and Z. The pointer in line with the arm C then shows on the circle A the true bearing of Y from the vessel, and the reading of the edge M on the arm C gives its distance. By comparing the bearing thus found with the compass bearing, the error of the ship's compass can be obtained.

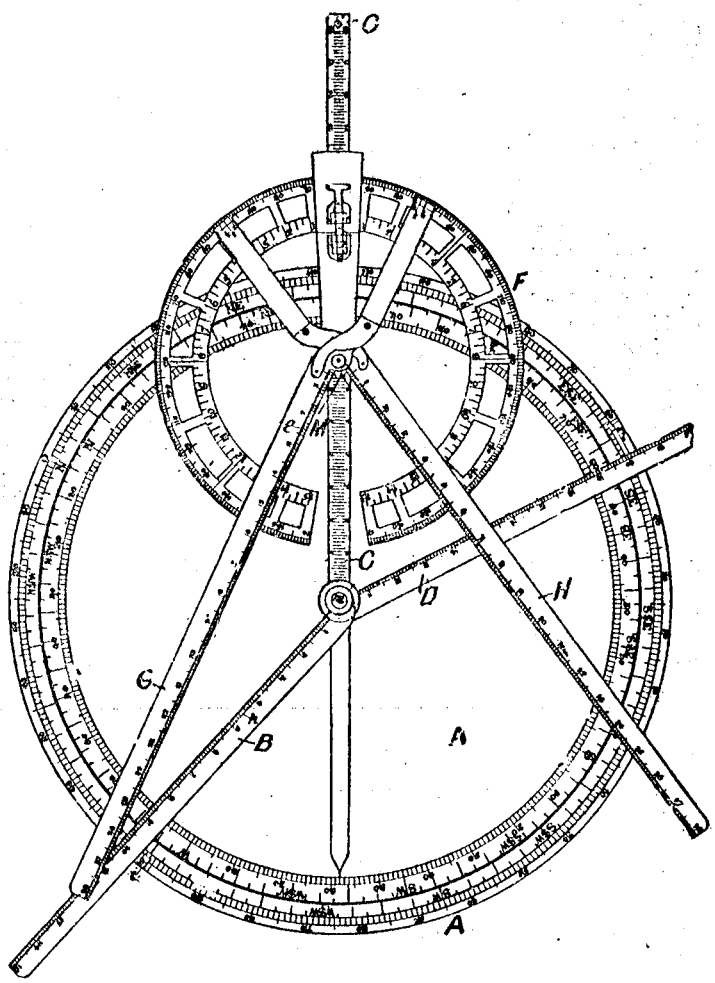

Harris A W 25015/1908 Pneumatic or electrical calculator

25,015. Harris, A. W. Nov. 20. [*Cognate Application No. 2712, A.D. 1909, dated Feb. 4.*]

FIG.13.

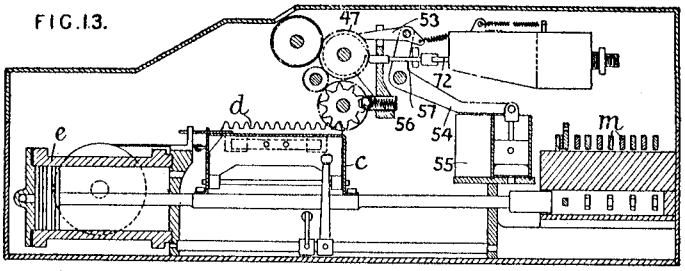

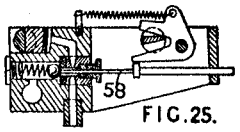

FIG.25.

Calculating-apparatus.—A pneumatically or electrically operated calculating-apparatus, for addition and subtraction, is of the single-bank type and is adapted to be operated from the numeral keys of a typewriter, or may be constructed as an independent calculating-machine. In the construction in which pneumatic operating-means is employed, the apparatus comprises several series of valves, combined with cylinders and pistons for selecting the particular denomination required, for setting stops determining the differential motion of the rack-carriage, for throwing the rack corresponding to the denomination selected into gear with its receiving-wheel, for giving the necessary longitudinal movement to the rack-carriage on which all the racks are mounted, for effecting the transfer movement, and for controlling the zeroizing-mechanism. Other features include a ball-and-tube interlock for the numeral-keys to prevent the operation of more than one key at a time, means for preventing the operation of a second key before the return to normal of the first key and for ensuring a complete operation of the machine, overthrow-preventing means, and a shift-key for rendering the calculating-function

FIG.7.

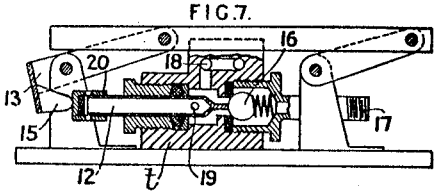

FIG.8.

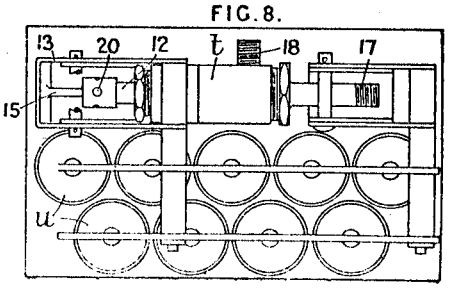

Hart H C 1479/1891 Multiply prices, low limits

1479. Thompson, W. P., [*Hart, H. C.*]. Jan. 27.

Calculating-apparatus.—Relates to machines for multiplying within low limits, as in ascertaining the value of retailed goods at a certain price. One factor receives mechanical expression by the movemen

of a lever M obtained from a shaft B, having a pinion b^1 geared with a rack b^2 on a slide which engages a crosshead *m* at the end of the lever. The factor is indicated on a dial by a loose pointer

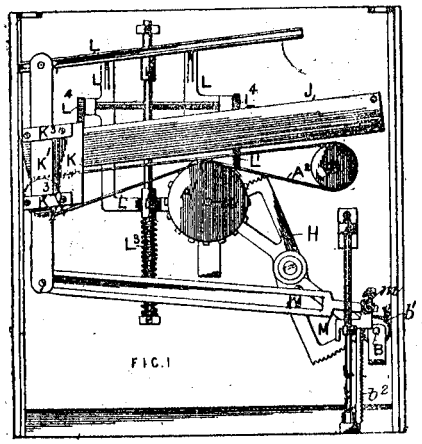

FIG. 1

(not shown) geared with a second pinion on the shaft B by a double sector H. The other factor is represented by the leverage applied to a link K^1 connecting the lever to a channel on a crosshead L capable of sliding on a post. The leverage is adjusted when the lever is parallel to the channel by means of a sprocket-wheel A^1 and band A^2, which shift along a guide J, a slide K having straps K^3 loosely clasping the link. This second factor is indicated by a pointer on the axis of the wheel A^1. The product is shown by a pointer receiving motion, by rack and pinion, from the crosshead L, which is steadied by other racks and pinions L^1, L^4. The shafts B and *a* are turned by thumb-wheels.

Hartmann & Hausler 15939/1902 Adder

15,939. Hartmann, S., and **Häusler, E.** July 17.

Calculating-apparatus.—A central spindle *c* in a circular casing *a* bears an exposed disc *b*, which is marked with the nine digits and zero, and carries wheels *k*, which gear a spring barrel *m* to a counting-train *p*. Initially the wheelwork is prevented from running, a pin *i* on the disc under the zero being obstructed by a radial key *f* which is latched upon an annular detent *h*. There are nine other such keys under the digits, and, when any one of them is pushed in, its engagement with the detent sets

1902

the zero key free. The train accordingly runs till the zero of the disc is over the key last used.

FIG. 1.

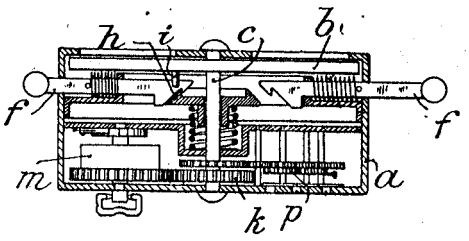

Harvey C J 12793/1915 Prop calc for percentages

12,793. Harvey, C. J. Sept. 7.

Proportional calculators.—Percentage-computing devices comprise a box provided with a lid having parallel but unequal ends b, b^1 divided into the same number of divisions and connected by coloured or other lines d^1. Adapted to lie across the lines d^1 and to move parallel to itself is a second scale c, of which a variety is provided. The divisions in the scales b, b^1 are oppositely numbered. Any desired percentage of any value upon the second scale may thus be determined.

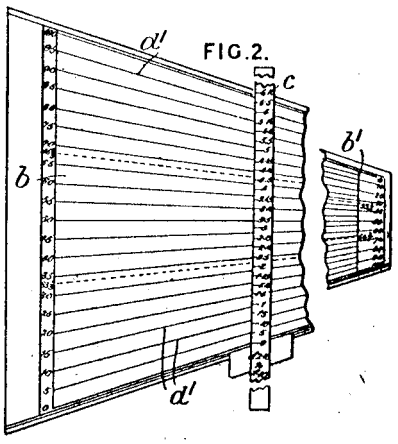

660

Hasselberger F 28566/1908 Abacus

28,566. Hasselberger, F. Oct. 12, [*date applied for under Section 91 of Patents &c. Act, 1907*].

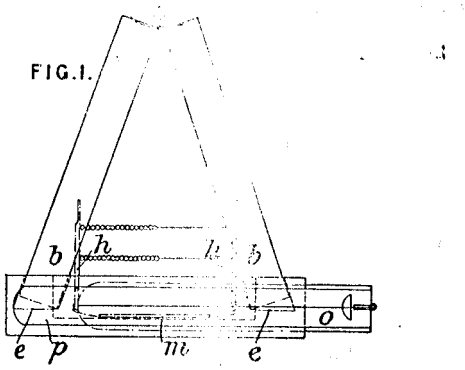

Calculating-apparatus.—A recess in a box for pencils and the like may be closed by flaps *h* carrying an abacus and arranged to be opened by a spring or rubber band *m* when a catch is removed.

Hawley G H T 1158/1883 Calendar calc

1158. Hawley, G. H. T. March 5.

Calendars and date indicators; calculating-apparatus.—The front *c* of the case *a* has openings *d*, d^1. On rollers, turned by knobs *i*, is a tape *j*, with the names of the months for eighteen months printed on it. Upon vertical rollers worked by knobs *m* is a scroll i^{11} with nine horizontal lines of figures divided into 357 vertical columns. The first line shows the days of the month *seriatim* horizontally, and those in the second line show the months of the year in similar order. The remaining seven lines show the number of days that have to run from the date when a bill is presented for discount to the end of the month before that in which the bill matures, unless that occurs on the last day of the month. The tape *j* travels over a board to keep it flat and the other along guide wires.

FIG.3

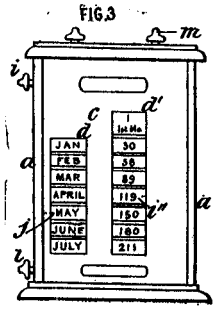

22

Hawtrey J P 4258/1877 Stylus driven band adder

4258. Hawtrey, J. P. Nov. 14. [6*d*.]

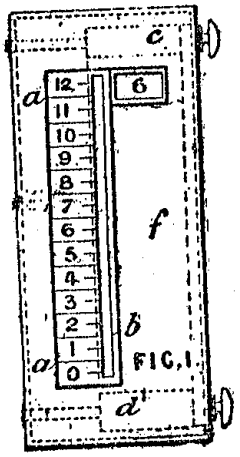

FIG. 1.

Arithmometer.—The index *a*, *a* is fixed outside the box, which contains a band *f* on rollers *c*, *d* carrying a series of numbers in the same or reverse order to those on *a*, *a*. The slot in the box shows one of these numbers. In working the apparatus an instrument, pointed or otherwise is put through the slot *b* opposite the zero of the index; the band, which shows zero through the slot, is then moved through any required distance, say until the instrument working the band is opposite 6 on the index; to add 4 to this the moving instrument moves the band from zero to 4 on the index. Handles may be used for moving the band. The machine may be also applied for adding sums of money by placing these compound quantities on the moving band.

Hawtrey J P 3823/1878 Adder flanged rings

3823. Hawtrey, J. P. Sept. 28.

Arithmometer.—Fig. 3 shows an arrangement suitable for the addition of money. Flanged rings B, C, D, and E can be revolved in circular guides by a style or other pointed instrument inserted into holes adjacent to the numbers on the surface as shown. They are fixed to ratchet-wheels controlled by pawls, stops, or other devices so that the figures are automatically "carried" in their proper order. The whole is covered by a plate having annular segmental slots, through which the style holes are exposed, and with result openings through one figure on each ring can be seen. The sides of the slots have numbers to correspond with the exposed style holes. The apparatus is operated by moving each ring by means of a style adjacent to a number which corresponds to the one to be added and moving it to the end of the slot: the total will be shown through the result apertures.

FIG. 3

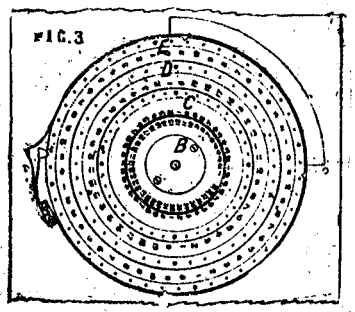

Hayes H 4071/1889 Tab Calc Cylinder multiply, wages

4071. Hayes, H. March 8.

FIG. 1.

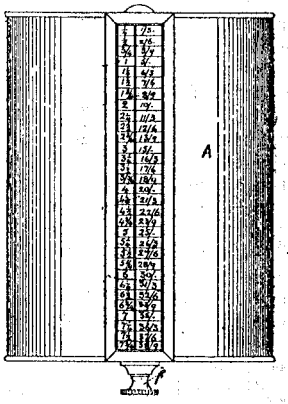

Calculating-apparatus for wages. A case A contains a drum marked with vertical columns of wages at different rates. This drum can be turned by a milled head *f*, so as to bring any column to a window marked with the times corresponding to the amounts.

Hearn M 18545/1892 Adding machine

18,545. Hearn, M. Oct. 17.

Calculating-apparatus.—Adding-wheels D with pinions C are operated separately by sets of digit keys I acting with proportional strokes and leverages on long levers H having racks G engaging the pinions. The keys of each set project through their corresponding lever H, and in operation strike a lever J beneath, which applies a pawl K to a stop ratchet B fast with the pinion C. The carrying-mechanism between wheels consists of an incomplete pinion E on the driving-wheel which once in a revolution engages a sector M bearing a pawl N which takes up a tooth of a ratchet-wheel A attached to the driver-wheel. The carrying occurs when the blank part of the pinion leaves the sector M free to return under the pull of a spring F. When the levers H are up they keep the pawls N applied to the wheels, preventing rotation without the use of a key. In a modification, the stop levers J are above the operating-levers H.

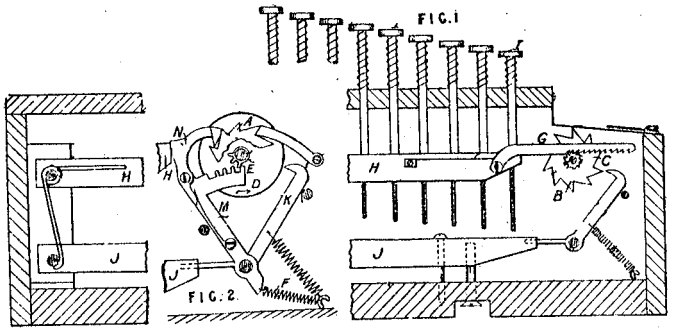

Heaton G 258/1881 Adder

258. Heaton, G. Jan. 20.

[*Provisional protection only.*]

Calculating-apparatus.—Several discs (one for each figure of the total) are mounted so as to revolve freely and are marked on the edges with numbers from 0 to 9, each disc having a notch in its periphery between 0 and 1, and carrying a parallel disc having 10 teeth. A series of levers carrying pawls are arranged between the discs in such a manner that as the levers are moved and a disc revolved the pawl upon reaching the notch will drop into the teeth of the next disc and advance it one tooth. The pawl is again lifted by back motion of the lever and cannot again fall until the lever has made 10 motions and the notch again reaches it. The levers may be connected together at their outer ends or have one common handle. The discs are enclosed in a case having openings so that only one number on each can be seen. When the apparatus is used for numbering papers &c. it is combined with the necessary printing-appliances.

Abridged also in Class *Printing, Letterpress &c.*

Heinitz W 336/1900 Adder Printer

336. Heinitz, W. Jan. 5.

Calculating-apparatus; counting-apparatus.—Relates to adding-apparatus which also prints the columns of figures and the total. There are several rows of nine keys B corresponding to actuating-wheels A. When any key B is depressed and the shaft W, carrying the wheels A, is rotated, the corresponding pin 1 acts upon all the teeth 2 behind it to push them sideways upon their axis 3, where they are retained by spring detents so that they engage the pinions S and 8 of the printing-mechanism and the numbering-wheels R respectively. These pinions are held against accidental displacement by the curved sides of the decagons 20 and 9 engaging the cam 10 which is cut away at the necessary places to allow for movement; the numbering-wheels are also provided with controlling-detents *s*. The pinions S adjust the type-bars T by means of the racks *b*, and, on the completion of the rotation of the wheels A, the teeth 2 have been pushed back to normal position by the blocks *a*, while the pins 1 have been returned by projections 7. Meanwhile a cam on the shaft W has actuated a mechanism, not shown, to raise the platen lever E against the type and take an impression on a paper strip wound on a spool G and passing through the guides 33, 34 to the gripping and feeding rollers F, *f*. On the return of the platen the feed-rollers are actuated by a pawl and ratchet not shown. The type-bars are returned to zero position by a lever C actuated by a cam on one of the wheels A, and the type receives ink from a roller *u* in an ink trough. "Carrying" on the numbering-wheels R is effected by means of tumbling pawls 6 which are thrown over to engage the pinions 8 of the wheels of next higher denomination by catches 16 displaced by studs projecting from the wheels below. These parts are returned to normal position by studs on the wheels A. To print the total, another cam shaft is rotated which rocks the plate J on its pivot *j* and brings the noses of the pawls 40, 41 into contact with the stepped snails 11, 12 fastened to each numbering-wheel R. The position of the pawls 40, 41 thus determines that of the lever *g*, which accordingly draws forward the type-bar *b* an amount corresponding to the number on the numbering-wheel R. An eccentric then actuates the platen lever E to print the total. To distinguish the total from the items, the rocking of the plate J operates a lever O and brings into position for printing a type-bar bearing the word "total." A rocking detent engaging notches in discs on the shaft W and the total printing-shaft respectively prevents them from being rotated together.

FIG. 2.

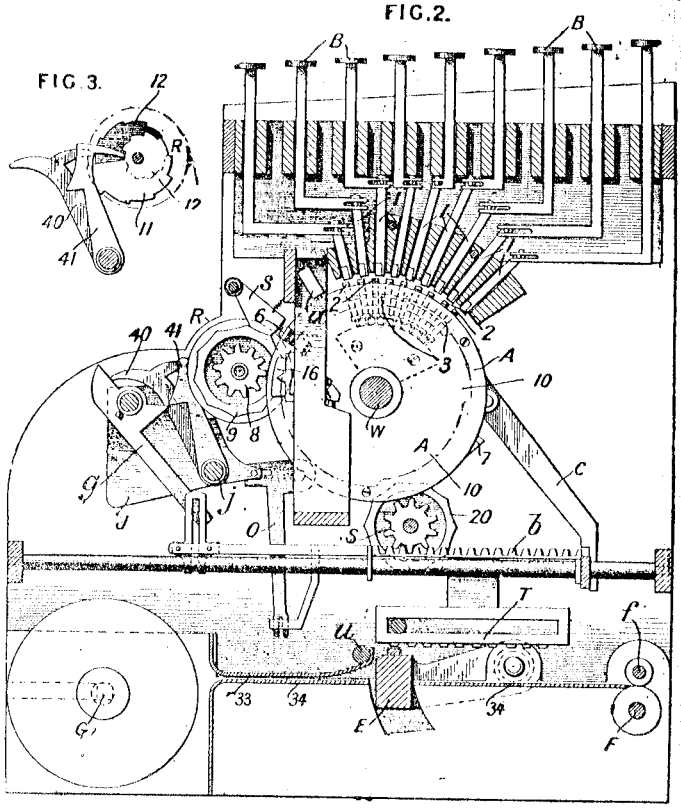

FIG. 3.

© B O B Williams Printed22/11/2023 CalcPatents Ed. 1.doc

Heinitz W 24140/1902 Adder

24,140. Haddan, H. J., [*Heinitz, W.*]. Nov. 4.

Calculating-apparatus. — Relates to means for transferring the tens in the rotary counting-mechanism, and to a locking-device for the driving and registering wheels. The peripheries of discs 2, 3, 4 . . . . , keyed on a shaft 1 which is driven with the same angular velocity as the crank shaft of the machine, fit exactly into arcs formed on the peripheries of discs 15 carried by the number wheels 9, 10, 11 . . . . , which revolve loosely on a fixed shaft 8. The discs 2, 3, 4 normally lock the disc 15, but are provided with notches 23 which release the discs when turned towards them. When the shaft 1 is rotated and the discs 15 are released, a tooth 24 on the disc 2 rotates by one tooth the wheel 16 which is adjacent to the corresponding disc 15 of the units wheel 9, the completion

FIG.1.

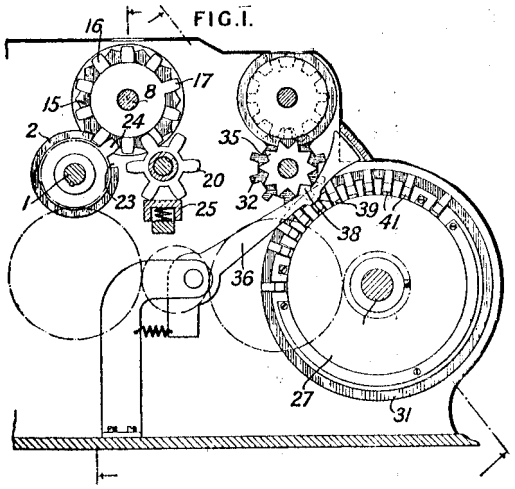

FIG.3.

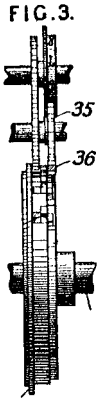

FIG.5.

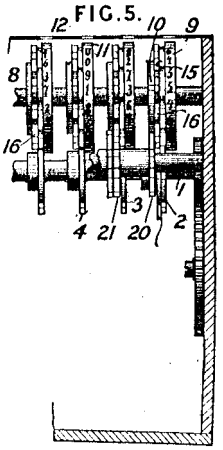

of the movement of the units wheel being ensured by the pushing-action of the back edge of the notch 23 against the arc-shaped edge of the disc 15. At the tenth revolution, the tooth 17 actuates the wheel 20, which is held in position by a spring bar 25, and moves it together with the attached wheel 21, which in turn moves by one tooth the wheel 16 of the tens wheel 10, the notch 23 in the disc 3 being then turned toward the corresponding disc 15. The movement of the hundreds, thousands, &c. wheels 11, 12 . . . . is similarly effected. The locking-device for the driving and registering wheels comprises a pivoted lever 36 provided with a tooth 38, which locks the star-wheel 35 when the lever is raised by the contact of the projections 41 on the teeth of the driving-wheel 27 with the part 39 of the lever 36. If, however, by means of the disc 31, one or more of the teeth on the driving-wheel are displaced laterally so as to gear with the wheel 32, the corresponding shoulder 41 is withdrawn from

© B O B Williams Printed22/11/2023 CalcPatents Ed. 1.doc

Heinitz W R 30338/1909 Stylus adder

30,338. Heinitz, W. R. Dec. 28.

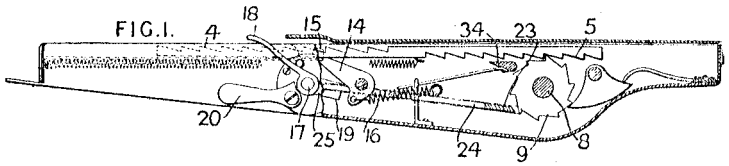

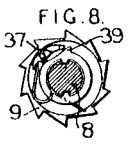

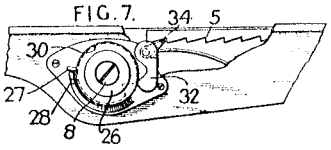

Adding - apparatus.—An adding and subtracting machine, set and operated by a stylus, has means which can be set so that each actuating-bar can be returned automatically after a setting, or set so that all the bars can be returned after operating a releasing-device. Provision is made for preventing the actuation of the numeral wheels on the return of the bars, and for zeroizing. The spring-controlled actuating-bars are provided on their upper side with teeth 4 on which the digits are marked, and have a set of teeth 5 on the underside to engage the numeral-wheels 9. A series of detents 15 under the control of a lever 18 are adapted to engage the teeth 4. A setting-lever 20 limits the movements of the lever 18, and, in the position shown in Fig. 1, the detents 15 engage the teeth

Hemm H C C Von 12935/1910 Log scales on one sheet

12,935. Hemm, H. C. C. von. May 27.

FIG.1.

FIG.3. E

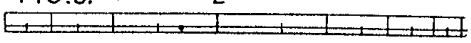

Logarithmic calculators. — The logarithmic system of calculation, such as is performed with slide-rules, is adapted for wide application by mounting a number of scales on one sheet and taking measurements by means of a beam compass. The large number of technical equations which can be expressed in the form $\frac{a}{b} = k.c^n$ or $a.b = k.c^n$ can thus be employed over a wide range. The logarithmic graduations are combined in pairs to different scales, as shown in Figs. 1 and 3, meeting at E and running similarly or oppositely in different arrangements, enabling a combined setting of the beam compass to be made. This setting can be then read off on any other suitable scale by setting one point on an assigned graduation.

Hemmi J 1076562 of 1917 Slide rule in bamboo

107,562. Hemmi, J. Feb. 12, 1917, [*Convention date*].

Slide-rules. — A slide-rule is constructed of strips of bamboo glued together, and the stock is divided longitudinally into two portions so secured that they may be brought closer together to adjust for wear. The two parts of the stock are connected by a strip of metal 6 secured either rigidly, so that by slight bending the adjustment for wear can be made, or preferably by clamping-screws passing through slots in the metal plate.

FIG. 5.

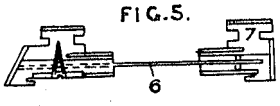

Henderson & Richards 3690/1905 Multiply slides

3690. Henderson, W., and **Richards, W.** Feb. 22.

Calculating-apparatus.—Multiplications of a constant factor by various other numbers are performed by means of sliding bars upon which the products of the factor by the nine possible units, tens, hundreds, and so on are displayed as follows:—There is a bar for each order of figures, placed parallel to the others in a frame allowing longitudinal sliding, the upper surfaces of the bars being in the same plane. Upon the units bar are written in a row, with suitable divisions, the nine products of the units with the factor, and in each case the decimal point is replaced by the unit in question, which is coloured or otherwise distinguished from the figures of the product. The same process is repeated for the tens bar, the multiplications being however by 10, 20, 30 . . . 90, and bars for the hundreds and thousands are formed in like manner, there being as many bars as there are figures in the greatest second factor. Multiplication is then performed by placing the proper coloured figures under one another and adding. The products may be written or impressed upon the bars, or slidable types in grooves may be used. In a modification, there are rotary slides.

Hensley H A 7714/1904 Adder, Interest

7714. Hensley, H. A. March 31.

Calculating-apparatus. — Keyboard adding-machines are described as applied to the computation of interest, the distinguishing features being that the key-setting is independent of the subsequent indicating-operation, and that the indicating-wheels can move transversely across the machine, whereby only nine keys in each group are necessary to set any seven-figure number and any group of keys can be employed at will. The depression of any key places a certain function of the digit upon the indicating-wheels. The machine described computes six per cent. interest for any number of days up to thirty-six, there being a group of nine keys for each day, and every six groups are arranged to engage the same set of operating-rods, and therefore to be available in the same position of the indicating-wheels. Fig. 4 is a longitudinal section through part of the keyboard and the carriage B, carrying the indicating-wheels 25, which can slide along the shafts 11, 12, guided by rollers *b* and tracks b^1, a spring drum and cord being employed to urge the carriage constantly to the right, and its position being determined by the fixed rack 15, with which spring-held arms 16 engage. These arms can be removed either at will by pressing the finger-pieces 21 and drawing up the cords 20, or automatically by the cam-discs 54 lifting the projection 67 at the end of a registering-operation, thereby enabling the carriage

FIG.4.

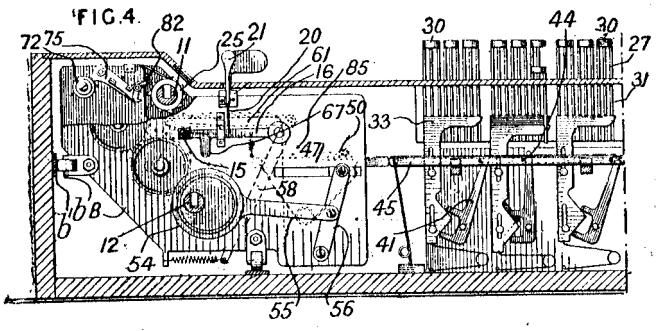

to be set for a particular calculation or moved one step at a time to correspond with the order of the digit to be next set upon the keys. Each key 30 carries at the lower end of its rod 27 a transverse plate Fig. 17, with seven fingers arranged at different depths depending on the number which the depression of the particular key should add to the indicating-wheels, each finger determining the amount of downward motion given to a vertical sliding bar 33 and thence the extent to which the operating-rod 45 slides forward owing to the angular motion of the lever 41, bearing against the pin 44. The rack-bar 47 which is opposite the rod is pushed forward and held by the pawl 50, and, the driving-handle on the shaft 12 being then rotated, the eccentric 54 and its rod 55 swing the lever 56 forward and with it the sliding block carrying the

pawl locked to the bar. A pin on the bar then strikes the lever 58 and throws the rack 61 forward in suitable guides, to engage and rotate the indicating-wheel 25 through the required angle. The

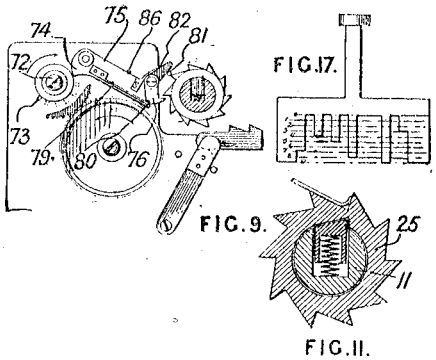

FIG.17.

FIG.9.

FIG.11.

end of the movement is determined by the tail of the pawl 50 striking the pin 85, the parts being then returned by springs. Fig. 9 shows the transferring-mechanism for the indicating-wheels. Corresponding to each wheel is a pivoted bar 75, the nose 74 of which is engaged once during each revolution of the driving-handle by a pin 73 upon the shaft 72, which is geared so as to move at the same speed as the driving-shaft. The pins for the several bars have a staggered arrangement as indicated, and in the position shown, when one of them moves its bar, the pawl 76 thereon will not engage with the teeth of the indicating-wheel; but when the projection 81 of the next lower wheel moves round so as to lift the overhanging arm 82 of the pawl, the spring 79 slips into a recess 80 and so holds the pawl that it will drive the indicating-wheel one tooth forward when the bar is thrown upwards, a fixed pin 86 displacing this spring at the required moment. Rotation of the shaft 11 in the proper direction, effected by a milled head on the end, brings all the indicating-wheels into similar position by means of the spring pawls shown in Fig. 11, and they may thus be set to zero. A guide and scale on the outside of the casing are provided for setting the carriage. Similar calculations may be performed by the machine, and the same carriage may be employed with several keyboards, each having transverse plates designed for the particular type of calculation to be effected.

© B O B Williams Printed22/11/2023 CalcPatents Ed. 1.doc

Hertzberg et al 10959/1905 compounded readings

10,959. Hertzberg, H., Snyder, W. P., Griffin, J. H., and **Bernhard, H. I.** May 25.

Scales; index hands.—In apparatus in which the indications of two independent electrical instruments are compounded to give a reading in different units by the crossing of their pointers, these are arranged to intersect in every position. The chart shown is graduated in terms of amperes, volts, watts, and horse-power. In a modification, the order of numbering is reversed. In another modification, the pointers are replaced by overlapping sectors, an index being marked on the upper and a series of intersecting circles on the lower sector, graduated in watts or other units, the curved edges being graduated in volts and amperes, respectively.

(*For Figure see next page.*)

83 F 2

10,959.

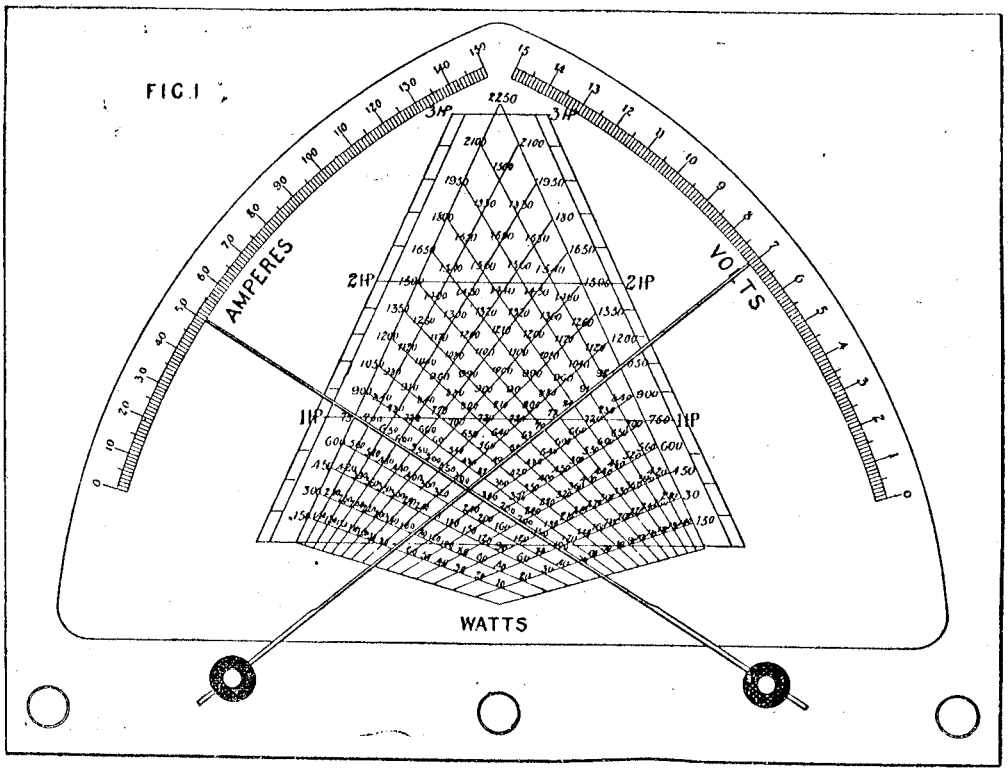

Heppenstall & Mear 1168995 of 1965 Circular slide rule “Rotoscale”
Go to espace
See [20]

Hett C L 6680/1891 Slide rule for belting

6680. Hett, C. L. April 18.

FIG. 1.

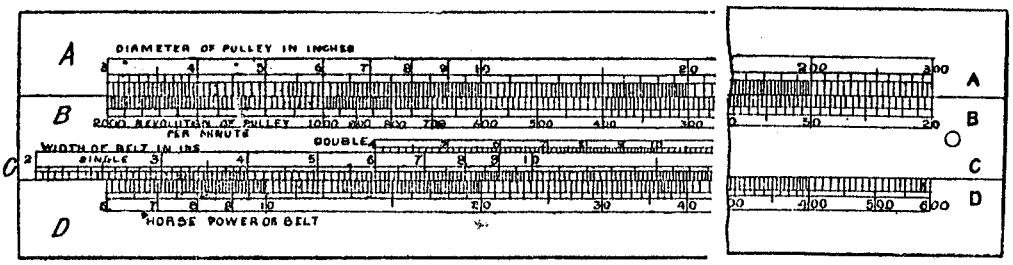

Slide-rules, designed for solving problems in connection with belting required for transmitting power. There are four longitudinal scales A, B, C, D, reading respectively diameter of pulley in inches, revolutions of pulley per minute, width of belt in inches, and horse power of belt. The inner two scales are on a strip which slides between the outer two. A line on the scale C also reads belt speeds on the scale D, and a second scale is given over C for double belts. A similar instrument is constructed with metrical measurements.

Hiett De K J T 9872/1897 A M Print

9872. Hiett, De K. J. T. April 20

Calculating - apparatus; counting-apparatus.—Relates to apparatus for adding and multiplying and printing the results. Sets of spring keys 7, marked 1–9, are pivoted to sets of bars 4 turning on the shafts 2, 3 (five of the keys of each set being pivoted on one shaft and four on the other). Each bar 4 has a finger 9, Fig. 18, forming a recess *x*, the length of which is proportional to the number on the key. 10, 10′ are sliding bars (one for each set of keys) urged constantly to the left by springs 11, but normally held by detents 12. On pressing any key of a set, the detent 12 is released by the key striking a cross-bar, and the slide 10 moves forward until the bar 14 strikes the end of the recess *x*, which the depression of the key has brought opposite to it.

FIG. 18.

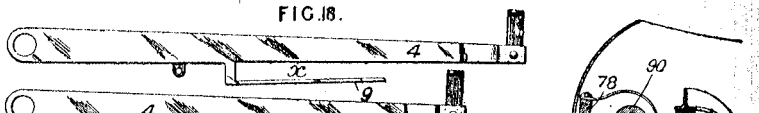

FIG. 1

FIG. 13.

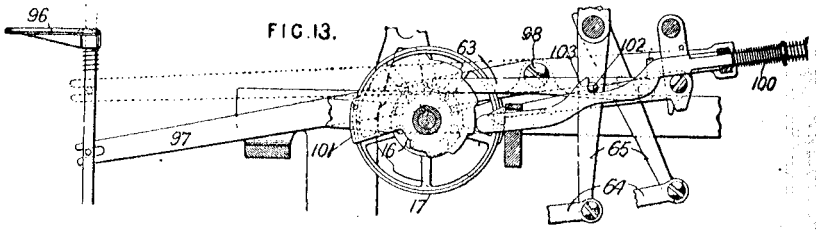

Thus the bars 10 move proportionally to the number on the key actuated, and by the rack 15 and link 64 "set" the counting-mechanism 17 and the type-sectors 65. The operated key is locked down, and the others are kept up, until the bars 10 are returned. The gears 16 of the counter (which is carried by a frame 19 pivoted at 20) do not engage the racks 15 during the "setting" movement, but when this is completed the operating-lever 22, 30, 32 is pulled forward. The initial movement rocks the frame 19 so as to bring the counter into gear, and then the part 32 engages a lever 31, which is linked to a cross-bar 34. This cross-bar, in moving to the right, picks up and returns to normal position all the bars 10 so as to actuate the counter. It is possible, by a mechanism not shown, to restore the racks as described without throwing the counter into gear. This is done if a mistake is noticed in the "setting," or when zeroizing the counter. The "carrying" mechanism of the counter is as follows:—A series of hooks 36 and driving-pawls 63 are pivoted to frames hung on the shaft 38, the hooks normally engaging a fixed bar 39. When any numbering-wheel 17 passes from 9 to 0, a pin on it knocks up the hook 36, and the frame is drawn back by a spring 40 bringing a projection 42 into the path of a lug 43 on a frame 49. When the handle 22 is pulled forward the bar 34 strikes an arm and, through it and a connecting-link, swings a bell-crank lever 46, 47 right across the machine, carrying with it the frame 49 sliding on the shafts 50, 51 to which is keyed a sliding pinion 52. At the same time a spring is put into tension which drives a flywheel and the shaft 51. As soon as the handle is released, the shaft 51 begins to revolve and the frame 49 to return under the influence of another spring. Wherever a hook 36 has been disengaged, the frame 49 is arrested temporarily by the contact of the lugs 43, 42, and the pinion 52 engaging the frame pushes it forward to re-engage the bar. 39. This movement causes the pawl 63 to advance the next numbering-wheel one unit. The frame 49 is then free to move on to the next disengaged hook. In setting the printing-segments 65 to print a number, say 7050, it is necessary that zeros should be printed to the right of each key pressed. For this purpose the zeros are mounted on separate bell cranks 74, 75 resting normally, as shown, on a bar 73 so that there is vacant space under the platen hammer 78. When a key is pressed and a segment moved to the right, the arm 75 is pushed over the bar 73 and all the zero levers are so connected by overlapping pins that all those printing to the right of a displaced segment are lifted into printing-line. The lever 22 is connected to a slide carrying a slip pawl and projecting lug. The former actuates the spring lever of the printing-platen 78 in a manner similar to the ringing of a table bell, while the

30

Text omitted

Hickling W E 21996/1896 Computing scale disc

FIG.2.

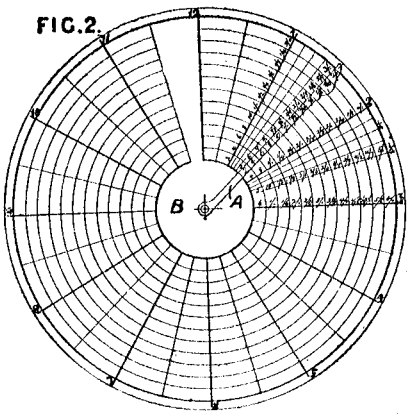

1,996. Hickling, W. E. Oct. 5.

Price and value, indicating.—Relates to devices for indicating the weight and value of an article during a weighing operation. In one form of the invention, in which a pointer A moves over a graduated dial B, the pointer is graduated in prices per lb. and the disc in total values along radial lines corresponding to the various weights. Slightly-modified arrangements are applicable to steelyard weighing-apparatus and the like.

Higgins L R 20323/1892 Converting scales

20,323. Higgins, L. R. Nov. 10.

FIG. 1.

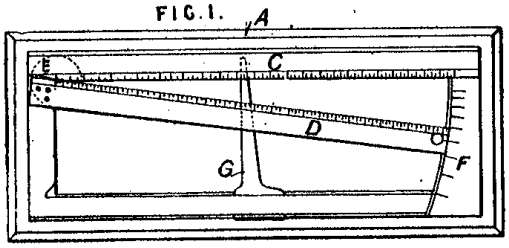

Calculating - apparatus. — The apparatus is specially designed for converting values of exchange and consists of a pair of diverging scales C, D on a board A and a sliding courser G at right-angles to the first scale, the three parts forming a right-angled triangle with a movable base which cuts equating values on the other two sides. The hypotenuse scale D is pivoted so that it can be set to different rates of exchange marked on an arc F.

Hill E 16900/1909 Tidal navigation

16,900. Hill, E. July 20.

Calculating-apparatus.—In an apparatus for computing the correction to be applied to a ship's course to counteract the set of the tide, a block 8 bearing the pivot 14 of a pointer 11 is moved along a graduated scale-arm 6, pivoted at 4, to a position corresponding to the ratio that the rate of the tide at the particular spot bears to the normal speed of the vessel. The scale-arm 6 is graduated in percentages of the constant distance between the fixed pivot 12 and the movable pivot 14, the distance representing the normal speed of the vessel. A compass rose 5, mounted on the axis 4 adapted to slide in a slot 2, is then turned until the compass-bearing of the destination corresponds with the centre line of the instrument or with the zero of a scale 15. The hand 7 carried by the scale-arm 6 is next turned to the direction of the set of the tide as given in the usual tables, and, as a result, the pointer 11 indicates on the scale 15 the correction in degrees to be given to the compass course to counteract the tidal effect.

16,900.

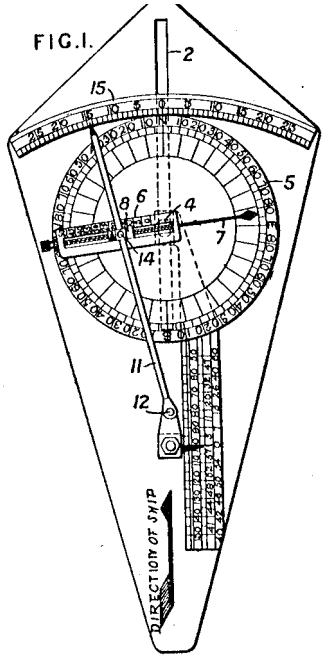

Hill H W 129372 of 1917 Gunnery calculator

129,372. Hill, H. W. Nov. 6, 1917.

FIG. 1.

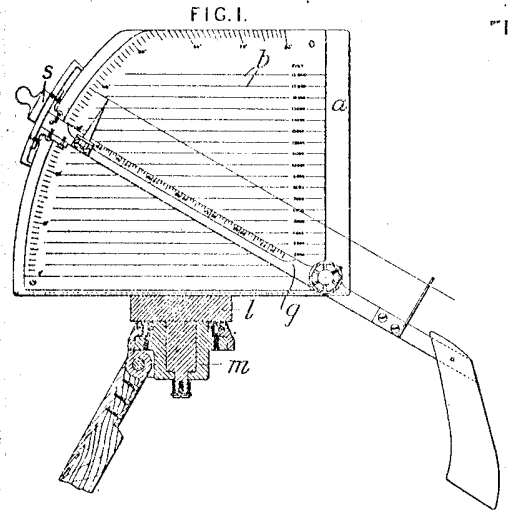

FIG. 2.

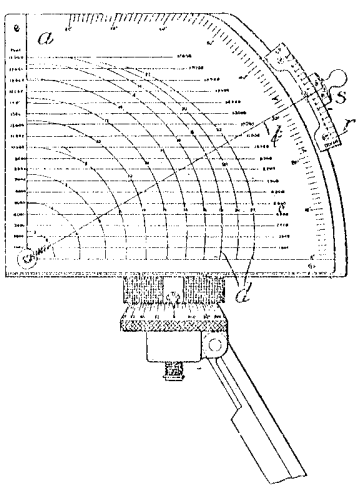

Gunnery calculators; plane-trigonometry calculators.—Relates to anti-aircraft apparatus, for determining, when the range of a target is known, the height and fuse time, of the kind comprising a sight movable in altitude and azimuth and a vertical plate movable in azimuth with the sight and marked with horizontal height lines and fuse time curves. According to the invention the sight-bar carries a device for applying an "up or down" correction according to the direction of flight of the target, such device comprising a cursor attached to one end of a wire or cord which in the zero position of the cursor is parallel to the line of sight. In the construction shown, the plate *a* is mounted by a base piece *l* to turn in the head *m* of a tripod or like stand. On one side, Fig. 1, the plate is marked with height lines *b* and on the other side, Fig. 2, with height lines and fuse time curves *d*. The sight-bar *g*, graduated in ranges, is pivoted in one corner of the plate and on the other side, Fig. 2, is a wire *t* connected at one end to the axis of rotation of the sight bar and at the other end to a cursor *s* which is adjustable along a scale *r* carried by the sight bar. In use, the height is read off opposite the range graduation on the sight bar and then on the other side of the plate the fuse time is given by the curve nearest to the intersection of the wire and the determined height line.

Hill T 1763/1876 Solve spherical trig

1763. Clark, A. M., [*Hill, T.*]. April 26.

Calculating-apparatus.—An instrument for solving problems in navigation or geodesy is formed of two meridians A, B and C, D of equal radius, one marked latitude and the other declination, and hinged together so that one of them can move over a sector plate F marked with hour angles, the other being fastened to the plate, as shown in Fig. 1. The declination meridian bears a vernier E carrying a steel pin at its vernier point. Both meridians are graduated from the pole Q down to thirty degrees below the equator at A, D. An arc of altitude G, Fig. 5, of the same radius as the meridians, is provided and is graduated from two degrees below the horizon at O to the zenith H, and bears at its zenith point a compass card having a central hole to fit the vernier pin. The use of the instrument is to solve the spherical triangle which is formed when the zenith point H is placed upon the pin of the vernier E and the altitude arc laid across the latitude meridian. All the principal problems of navigation relating to time, latitude, longitude, azimuth, and great-circle sailing may be solved by means of the instrument. For great-circle sailing, the meridians are clamped at an angle equal to the difference between the longitude of the ship and of the desired port, the vernier E is

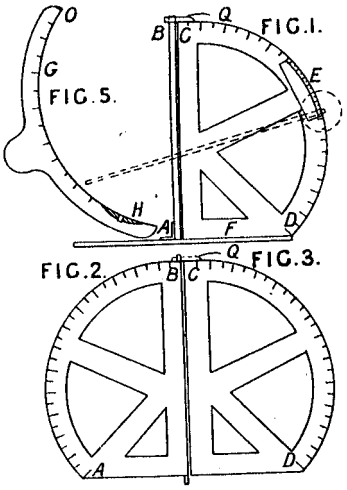

placed on the declination meridian at the ship's latitude, the zenith of altitude is put upon it, and the altitude arc is laid over the latitude of the desired port; the compass card now indicates the course, while the co-altitude is the great-circle distance.

Hillhouse P A 11074/1895 Planimeter

11,074. Hillhouse, P. A. June 5.

Calculating apparatus. — Relates to planimeters with sliding bars. The usual marks on the sliding bar 1 are omitted but the bar is graduated with a decimal scale 2 to be adjusted, as required, in relation to a fiducial mark 3. A balance weight 7 is provided to counterpoise the opposite end of the instrument. With this arrangement a table of instructions, Fig. 3, is used giving the settings and corresponding multipliers required under various circumstances to reduce the area obtained to the units required, or make calculations as to cost &c.

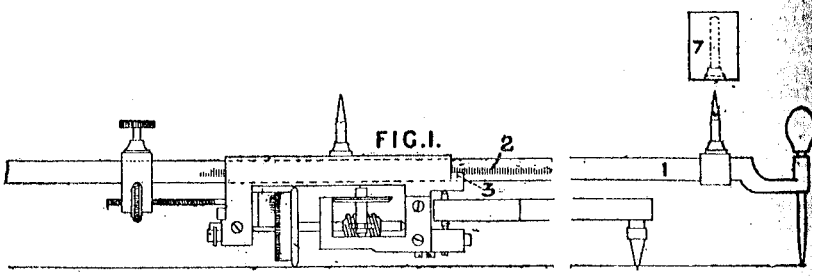

AREAS REQUIRED IN SQUARE FEET.

Scale of Drawing	Scale = 1÷	Area = RL÷	Settings	Multipliers.
1/16" = 1'	192	·0625	25	400
			37·5	600
1/8" = 1'	96	25	25	100
			35·71	100/7
3/16" = 1'	64	·5625	18·75	100/3
			39·375	70

FIG.3

Hills W D 16198/1911 Circ slide rule Currency

16,198. Hills, W. D. July 13.

Slide-rules. — An instrument of the circular type, logarithmically graduated to show value in British and American moneys from price and weight, comprises a box A having two scales B, G, an inner pivoted sector E graduated with two scales of prices F, H, and a celluloid arm J. The device is set so that the index E^1 on the inner sector points to the given weight on the scale B, whereupon the arm J shows the value at any given price per unit of weight. A cover or flap A^1 is provided to protect the scales when the apparatus is carried in the pocket.

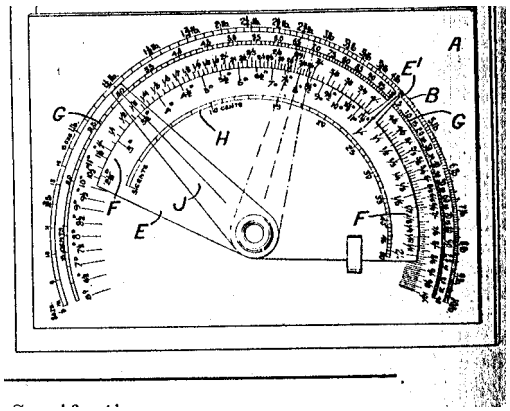

Hillyer E C 22721/1907 Disk adder Bridge scorer

22,721. Hillyer, E. C. Oct. 15.

FIG.1.

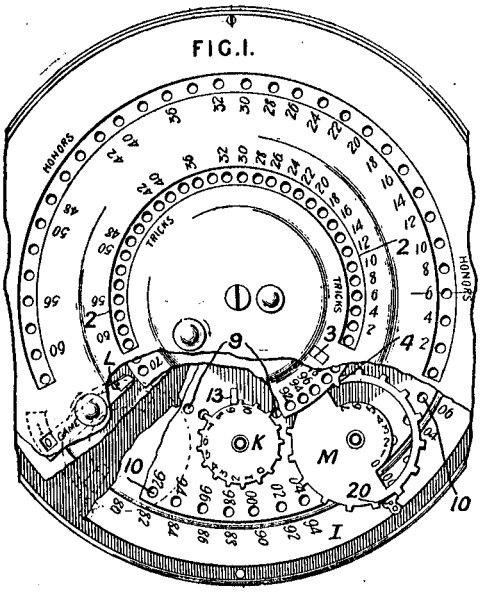

FIG.2.

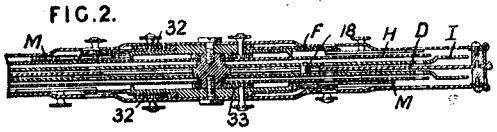

Calculating-apparatus; counting-apparatus. — A bridge marker consists of two sets of three concentric disks which may be rotated in a frame separately or some of them together so as to show the [illegible] of tricks and ıe total score disk to show 1 at a hundreds slot. 'he "trick" disk can always be moved back indeendently to zero to record fresh tricks. A third isk I has one set of holes similar to those in F nd a second set similar to the set 10 of the honour" disk and thus would record the same as hat disk were it not that it is connected by a stud 8, Fig. 2, with a similar third disk on the other ide of the partition D. The disk I is moved forvards by one set of players and backwards by the ıther. A stud 20, Fig. 1, operates wheels M half ıpen and half solid so that a blank is shown on the osing side, and the difference score on the winning ide. The disks F are returned to zero by pinions 32, Fig. 2, a stop consisting of a pin and a spring which can pass it only in one direction being used. The disks H and wheels are similarly returned to :ero by pinions 33 &c. The disks I are returned oy making the difference 0.

ırence ımber of a ıvided n 2 to in the slot 2, nbers. d in a ıd the slot 3. shown w one e two second ıciding set 10, ıe disk The l score

and are shown at a slot similar to the slot 5. The disks are moved together when tricks are registered, but only the lower one when honours are marked. When the total score exceeds ninety-eight, a numbered wheel K is moved by a lug 13 on

Hinchman G N 24489/1907 Adder lister for £sd

24,489. Hinchman, G. N. Nov. 5.

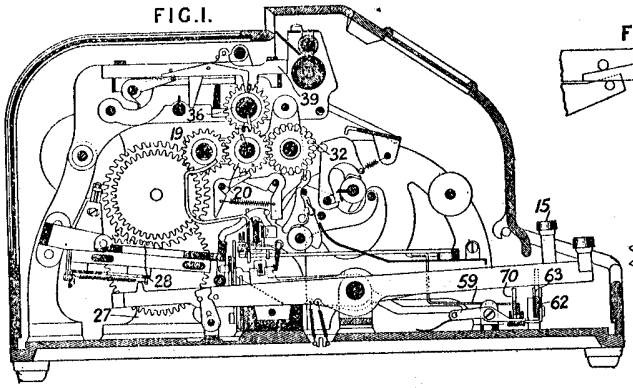

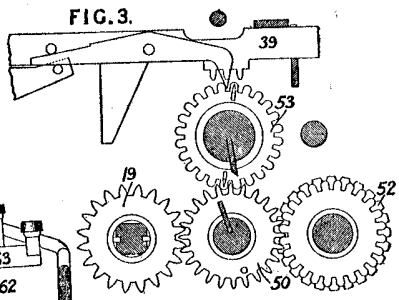



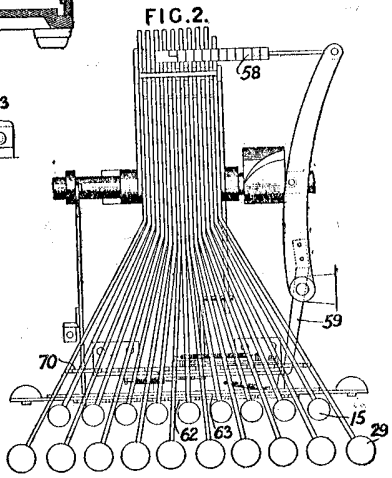

Calculating-apparatus.—The single-bank, key-set, motor-operated, adding and listing machine described in Specification No. 20,133, A.D. 1901, is modified with regard to the arrangement of item-printing and totalizing-wheels, the transfer-mechanism, the keyboard locking-means, and the lateral spacing mechanism, in order that the machine may deal with British monetary values. By means of a series of denomination-selecting keys 15, the master-actuating wheel 19 is brought into engagement with the receiving-wheel 20 corresponding to the highest denomination of an item, and subsequently as the successive item keys are depressed this wheel moves by uniform steps towards the right; the depression of an item key 29 frees the motor, which rotates the master wheel and differentially controls its movement by the aid of a rack 28. Each receiving-wheel is in gear with an item-printing wheel 32 and a totalizing-wheel 36, and when an item has been set the main handle is operated to rewind the motor, print the item, and lower the transfer racks 39 into engagement so that the transfer may be effected. For British monetary values, the tens-of-shillings totalizing-wheels is provided with a transfer tooth opposite to every alternate main tooth, but two only of these are employed in the process of zeroizing, and the member with which they engage upon the transfer rack-bar is spring-mounted to permit of this. The pence receiving-wheel 50, Fig. 3, although of the same diameter as the other receiving-wheels of twenty teeth, is provided with twenty-four fine and widely-spaced teeth, gearing with suitable item-printing and totalizing-wheels 52, 53 as shown. The keyboard is controlled by two locking arrangements operated by the laterally-moving spacing-rack 58, Fig. 2, of the master-actuating wheel of the linkwork terminating in the finger 59, which in arriving at the tens-of-shillings position contacts with a projection upon and moves to the left a locking-comb 62, Fig. 11, whereby the slots in the fixed plate 63 for all the numeral key-levers except those of the "0" and "1" keys are blocked. As the master wheel passes this position, the keys are freed, but in the tens-of-pence position the finger, by pawl-and-ratchet action, presses a somewhat similar locking-plate 70 to the left, so that when any number of pence up to "9" has been registered, only the "1" and "2" keys remain free to increase this number to "10" or "11." Between these two successive pence registrations, the master-wheel remains in gear with the pence receiving-wheel, since that part of the spacing-rack engaging with the detent pawl is cut away for the last tooth as shown in Fig. 2; and although the rack moves momentarily to the right and carries the pawl-retained locking-plate 70 a further step to the left, it returns to the pence position. The final movement of the locking-plate locks all the numeral keys, in which condition they remain until a denomination key is next operated.

Hincks H T 19061/1904 Circular slide rule for Ohm's Law or pipes

19,061. Hincks, H. T. Sept. 3.

FIG. 4.

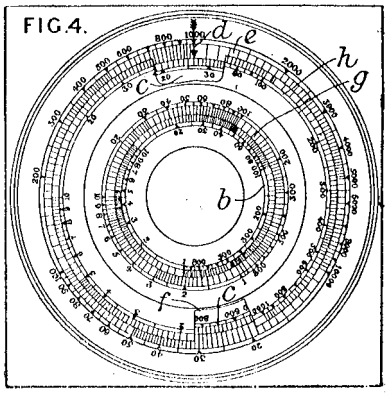

Slide rules. — Circular logarithmic multiplying and dividing rules are shown, with scales designed for calculating the Ohm's law relations between the dimensions of electric conductors,

FIG. 5.

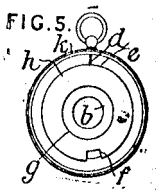

their specific conductivity, and the current and voltage for which they are to be used. Stationary upon the base-plate are scales *b*, *c* of voltage and "conductivity constant" respectively. Between them is a rotatable disc, covering the scale *c* except where a gap *f* allows of setting, and itself carrying scales *g*, *h* respectively of ampères and area of conductor in thousandths of a square inch. The quantity set upon the "conductivity constant" scale is the area of conductor of the particular material to be used which will have a resistance of one ohm per thousand yards, with an increase of 5·7 per cent. over the theoretical value for variation, bad joints, and sag, and has different values for continuous, single-phase, or polyphase currents. When the arrow *d* upon the movable outermost or length-of-conductor scale *e* is set to the proper constant, for any position of the disc *g h* corresponding values of the current, voltage, and length of conductor will be on the same radial line, and any one may be determined if the other two are known. Fig. 5 shows the scales mounted in a casing *k* of watch form, and in other modifications there are means for rotating the rings. The apparatus can be used for calculations with regard to the flow of liquids in pipes.

Hines J 10729/1905 Tab Calc

10,729. Hines, J. May 23.

Calculating-apparatus.—Computing-table apparatus in which a ready-reckoning table, say, for values of goods at various weights and prices, is marked upon a flexible sheet, can be set for one factor by means of an external handle, and for the other by selecting the key which will withdraw a shutter over the required point on the sheet. Fig. 1 shows the slot D in the casing, normally obstructed by the shutters E, and the end aperture D^1 under which the first setting factor, the weight, is adjusted by means of the handle J, rotating through a simple spring coupling the train of wheels which drives the drums B, B^1, Figs. 2 and 3, over which the sheet passes. Each price key F actuates an arm E^1, carrying the shutter E, and has a projection e^1 for displacing and finally locking with the common spring-pivoted locking-bar e^2, so that depression of any key releases a key already down, or the locking-key *f*, if it has been thrown out of action in order to turn the handle. The key carries down the arms G, H, H^1, and removes the pins h^1 from the teeth of one spur-wheel in the train. There is a simple worm-driven stop-arrangement to prevent overwinding of the drums. The following modifications of the key and shutter action are described: (1) straight plunger-keys with recesses in which linked pawls engage; (2) plunger keys and bell-crank levers operating straight slides carrying projections engaging a common detent bar; (3) lever keys pivoted at the rear with shutters in one piece; and (4) straight slides with hooks for engagement by the operator's finger.

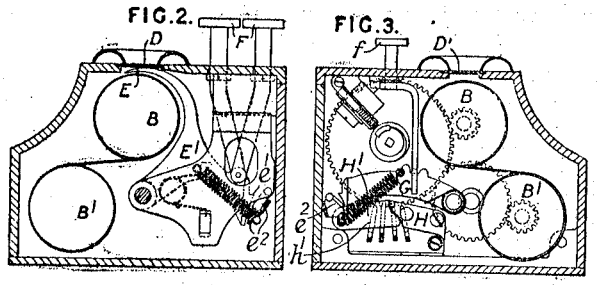

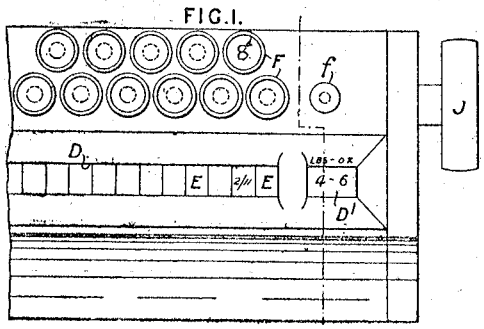

See [21]

Pic from brochure

THE HINES' PATENT WAGE AND COSTING CALCULATOR,

For payments PER HOUR.

Class **H.**

Calculates the value of any number of hours up to 100 hours by ¼-hours, also 200, 300 and 400 hours, at per hour rates of from 1d. up to 11¾d. by ¼d.; with extra keys for ⅛d., ⅜d., ⅝d. and ⅞d., which enables calculations to be made at rates from ⅛d. to 11⅞d. by ⅛d.

KEYBOARD PLAN.

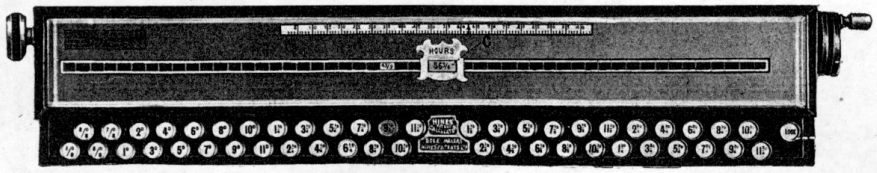

The keys are arranged in differently COLOURED GROUPS, as follows:—

⅛d. to ⅞d. —— 1d. to 11d. —— 1¼d. to 11¼d. —— 1½d. to 11½d. —— 1¾d. to 11¾d.

NOTE.—This Machine can also be used for calculating certain classes of PIECEWORK, or extending STOCK SHEETS, etc. To do this, read the HOUR figures as SINGLE ARTICLES, DOZENS, HUNDREDS, GROSSES, LBS.,—etc., thus, instead of 57¼ hours at 6¼d. per hour—read 57¼ DOZENS at 6¼d. per dozen.

1. Turn one of the hand-wheels until the hours worked are shown in the centre slot, C. The Arrow Indicator in the upper slot instantly shows how far to turn the hand-wheel.
2. Press down the key showing the employee's rate of wages, and the correct calculation is instantly shown above the key.

8

The Hines' Patent Wage and Costing Calculator,

For Payments PER WEEK.

Class **W.**

Calculates the value of any number of hours up to 100 hours by ¼-hours, also 200, 300 and 400 hours, at rates from 4/- up to 50/- per week of any given number of hours, with extra keys for 3d., 6d. and 9d. per week, which enables calculations to be made at rates from 4/- to 50/- per week by 3d.

NOTE.—This machine is made to suit working weeks of various hours.

KEYBOARD PLAN.

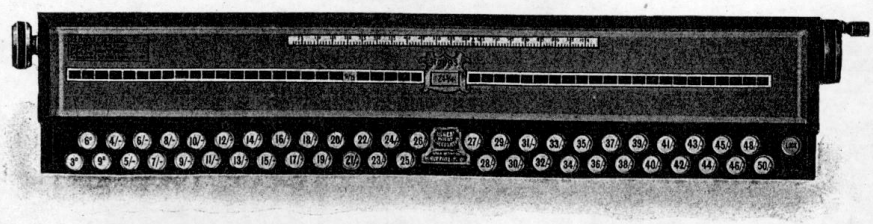

To facilitate the use of the machine, the keys are arranged in differently COLOURED GROUPS, as follows:—

3d., 6d., 9d. 4/- to 10/- 11/- to 20/- 21/- to 30/- 31/- to 40/- 41/- to 50/-

NOTE.—Either the right, or left, hand wheels can be used to set the hours.
If a wrong price key should be depressed, the depression of the correct key will cause it to rise, and so cancel the wrong calculation, leaving only the correct one in view.

9

Hines J 26518/1908 Tab calc

26,518. Hines, J. Dec. 8. [*Cognate Application No. 15,262, A.D. 1909, dated June 30.*]

Calculating-apparatus.—In tabular apparatus of the type described in Specification No. 10,729, A.D. 1905, for performing ready-reckoning, in which tables setting out the products and one series of factors of the calculation are marked on movable sheets passing over drums actuated by external handles, the result being exposed when shutters are withdrawn, means are described for (1) actuating the shutters by keys or by hand, (2) returning the shutters to normal position by depressing a cancelling key, (3) preventing overwinding of the drums, (4) and giving an indication when nearing the end of an operation. When more than one sheet is provided, as shown in Fig. 1, a number of denominations, such as tons, hundredweights, &c., may be employed which can be multiplied by a single multiplier and the result be shown through a series of apertures exposed simultaneously by depressing a key. (1) When a key B is depressed, it actuates the shutter T through a lever B^1, and is held in the depressed position by a hook C on the lever B^1 engaging a locking-bar A, the key being released when another key is depressed. When there are no keys employed, a long aperture P, Fig. 8, and a number of longitudinal sliding shutters P^1 may be provided, a space being left at one end to allow the shutters to move. A single aperture exposes the selected member of one series of factors and the other series of factors is set out on the casing opposite the shutters P^1. (2) To return the shutter to normal, a cancelling-key A^1 is depressed, whereby levers D^1, D^2 move the bar A away from the hook of the depressed key lever. (3) To prevent overwinding of the drums, one of the shafts F has two collars H which act as stops to limit the travel of a nut E on the threaded part of the shaft F. (4) An indication that the moving sheet is approaching the desired multiplier and result is furnished by mounting a mitre-wheel on the shaft F so as to drive a similar wheel and a sprocket-wheel I over which a chain J passes, the chain having a pointer M travelling over a scale on the top of the casing and guided by means of a slotted tube m^2. Modified arrangements are also described for (1) exhibiting the results, and grouping the products according to denominations and (2) indi ating the setting to a particular factor.

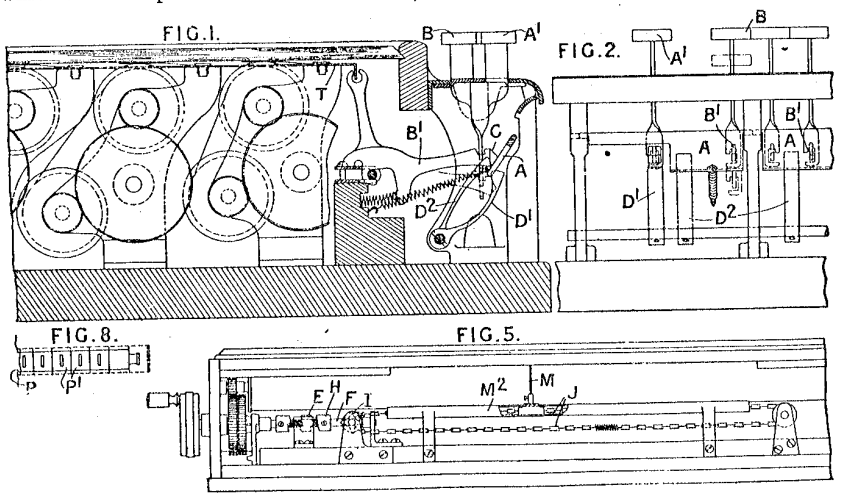

See [21]

Hines J 12963/1910 Tab calc

12,963. Hines, J. May 28.

Tabular calculators; cash registers, indicators for.—Apparatus of the type described in Specification 10,729/05 is mounted upon a vertical spindle supported by a pedestal, and in

142

one position faces the operator; when released from the position, it is adapted to rotate under the action of gravity or of a spring so that the customer can observe the setting and read the

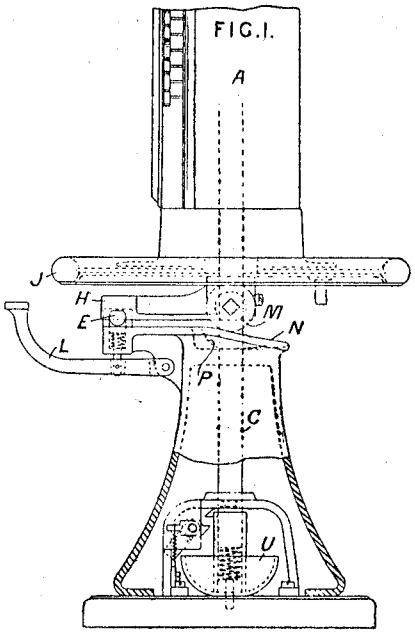

result. When the apparatus A, which is mounted upon the rotatable spindle C, faces the operator, it is held in position by a spring-controlled catch E engaging an arm H fixed to the spindle; in this position, the setting-wheel J, which carries indicating and over-wind-preventing devices, can be turned so as to effect the proper setting of the tabular bands. Upon the depression of a lever L, the catch E is released, and the wheel M travels along a helical track N under the influence of gravity, and is thus turned so as to face the customer. A stop P is provided. The descent of the spindle operates a bell U.

Hoch A 14945/1899 Adder printer

14,945. Hoch, A. July 20.

Calculating - apparatus. —Relates to apparatus for adding columns of figures and printing the columns and the result. The number-keys *e*, Fig. 3, are connected by links 20 to a series of levers *b* having slots *x* at the bottom inclined at different angles and engaging a cross-bar 16 on a pivoted frame *j*. When a key is struck, the frame *j* is thrown up a distance proportional to the amount marked on the key, carrying with it the link 18 and cross-bar 19. A type-bar *a*, which can slide across the machine on the cross-bar 19, according to the denomination, units, tens, hundreds, &c. of the figure to be printed, is thus thrown up to bring the proper type opposite the paper *c*, and its rack 14

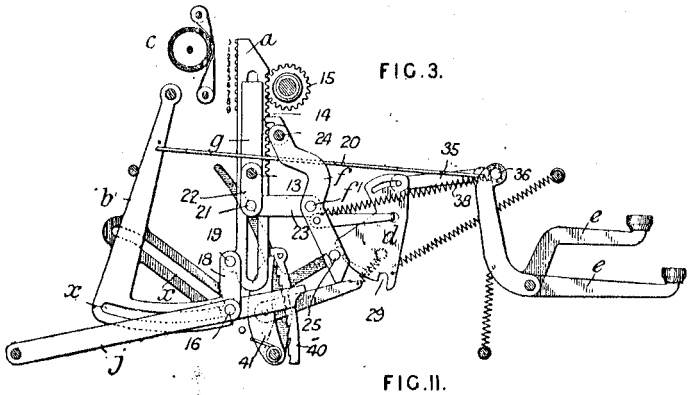

FIG.II.

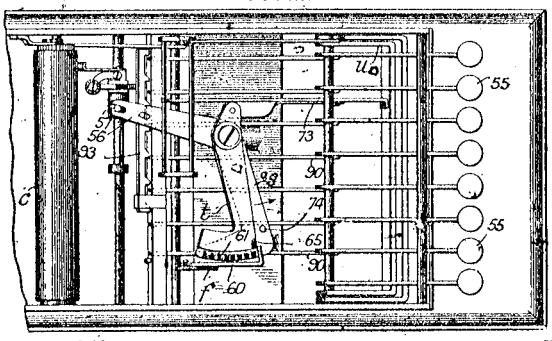

259 R 2

More text omitted

Hoch & Wendling 7289/1902 Adder typewriter

7289. Hoch, A., and **Wendling, G. X.** March 25.

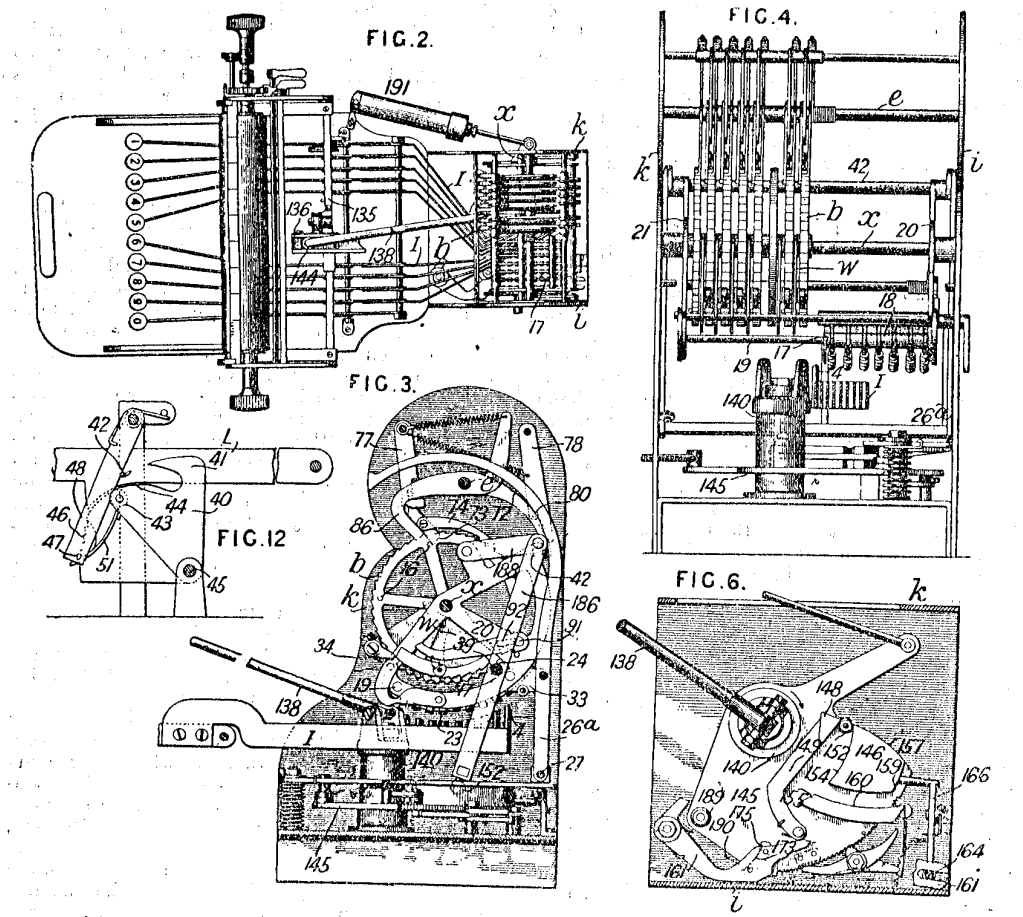

Calculating apparatus.—Relates to type-writers combined with adding-apparatus, and is described as applied to the Oliver machine. Fig. 2 shows the machine in plan view, certain parts being

More text omitted

Hoch & Wendling 7290/1902 Adder printer

7290. Hoch, A., and **Wendling, G. X.** March 25.

Calculating - apparatus. —Relates to machines for printing rows of figures in arithmetical order, and for calculating and printing the sum at the foot of the rows. Fig. 1 shows a front elevation, Fig. 3 a plan, Fig. 5 a side elevation, Fig. 7 a detail side view of some of the principal parts, and Fig. 11 a side view of one of the segmental discs. A series of adding-wheels *b* and segmental discs *w* arranged alternately is mounted on the stationary shaft *x*. A flange *a* on each disc *w*, bearing printing - type for the figures 0 to 9 arranged in order, projects over the adjacent wheel *b*. A series of printing-types is arranged round the circumference of each wheel *b*, repeating the figures 0 to 9 an integral number of times; the ratchet teeth 15 are spaced to agree with the type figures, and a projecting pin 16 is placed at every tenth tooth. The discs *w* are provided with teeth 14, stops 24, and extensions 35 to carry pawls 34 arranged to engage the ratchet teeth 15 of the wheels *b* when their bevelled tails are released from beneath the cross-rod 107 by a slight movement of the discs. The selector *c* consists of a series of bars 17, concentric with the wheels *b*, connected to sleeves 18, which slide on the rods 19 connecting the pieces 20, 21 mounted to turn on the shaft *x*. Each bar 17 is provided with grooves to receive a series of sliding push-pins 22, preferably formed of loops of spring metal which straddle the bars. The finger keys *d*, arranged in two rows, are pivotally attached at the lower ends 2 to spring-held rocker arms 3, having tappet members 4, pivoted on the fixed pin 5. Each arm 3 passes through a vertical slot in the fixed plate 7, and an inclined slot in the plate 9, which is slotted horizontally to permit of movement across the supporting-rods 8. By this arrangement a second key cannot be actuated until the key first actuated has been returned to its original position. The arms 3 pivoted at one side of the machine overlap the arms 3 pivoted at the other, so that all the

FIG. 3.

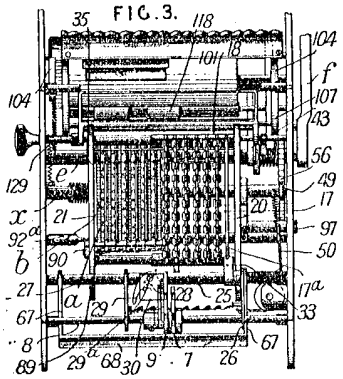

FIG. 1.

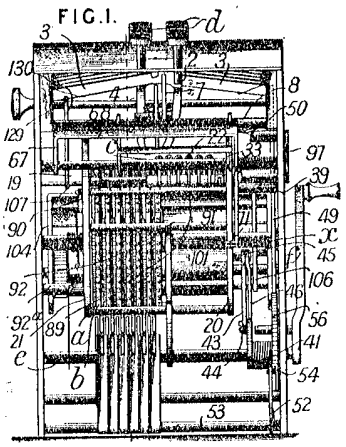

© B O B Williams Printed22/11/2023 CalcPatents Ed. 1.doc

Holden E C 3199/1908 Slide rule for yarn production

3199. Holden, E. C. Feb. 13.

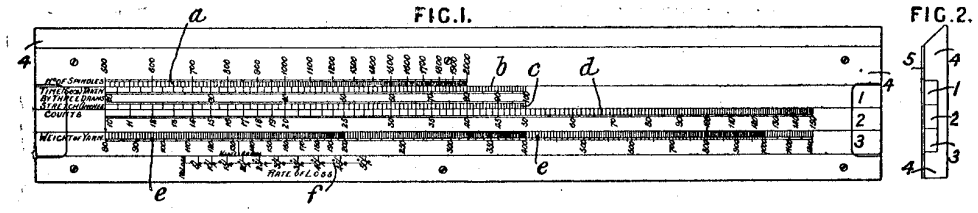

Slide rules for calculating the production of cotton and other yarns upon a spinning-mule, and between which three scale-bearing slides 1, 2, 3 are fitted, the whole being covered with a transparent material 5. The scale *a* is graduated for number of spindles. The slide 1 has on its upper edge a scale *b* for the number of seconds for three draws of the mule, and upon its lower edge a scale *c* for the stretch of yarn in inches. The middle slide 2 is graduated on its upper edge for the counts of the yarn *d*, and two arrows are marked on the scale at the 10 and 100 graduations. The lowest scale 3 bears upon its upper edge a scale *e* representing lb. weight of yarn produced for a given period of time. Below this is a fixed scale *f* to indicate waste, loss of time, &c. The scales may be alternatively set out on concentric circular disks.

the net production, allowing for waste, breakages, and loss of time. Upon a plate 4 are two scales *a*, *f*,

Hollerith H 327/1889 Punched card

327. Hollerith, H. Jan. 8.

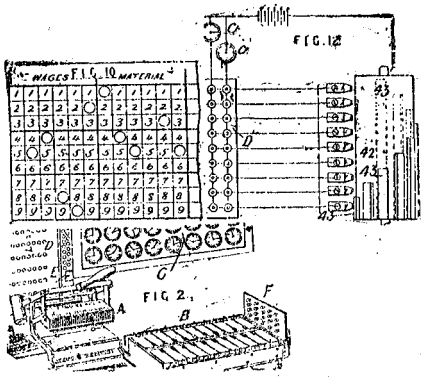

Counting - apparatus ; calculating - apparatus.—Relates to means for compiling statistics. A card ruled into squares, and numbered or marked for the details of statistics, is provided for each item to be considered. For instance, in compiling the health statistics of an army, a card is set apart for each person, which is ruled into squares and divided so as to provide for an account as to

See [Austrian, 1982 #105]

Hollerith H 8101/1894 Punched card for statistics

8101. Hollerith, H. April 24.

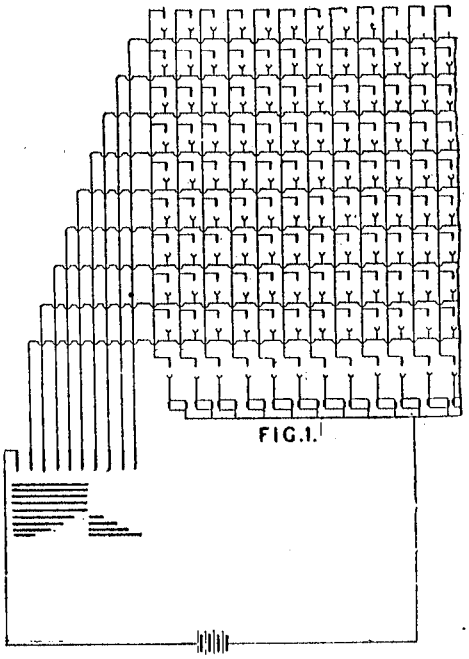

Calculating apparatus. — This apparatus, illustrated diagrammatically, is an electric one, designed for compiling statistics, as, for instance, census returns. Cards are employed, which are divided into spaces, each of them corresponding to a statistical subject and printed with a column of consecutive numbers, from 1 to the highest likely to be returned. In each column a hole is punched against the returned number, and the card is placed upon a table which holds mercury contact cups connected in rows to separate terminals of a switch. Upon the card is then lowered a plate, which bears spring pins connected in columns by wires from electromagnetic counters in parallel. These counters and the remaining terminal of the switch are connected through the battery. Wherever a hole is punched in the card, a spring pin passes through into the mercury cup beneath. The switch being then operated makes and breaks the circuit with the rows of cups one at a time, two at a time, three at a time, and so on, beginning with the row under the highest numbers on the cards, and finally including the row under the units of each card. Thus the counter to each column is operated as many times as the number of the hole punched in that column. Additional arrangements may be provided to prevent or detect errors.

Hollerith H 17738/1894 Punched cards

17,738. Boult, A. J., [*Hollerith, H.*]. Sept. 18.

Statistics, compiling or tabulating mechanically.—Cards are punched in various positions to indicate characteristics of individuals or things, and these cards are placed in a machine by which the numbers of the said characteristics are counted. A card is shown in Fig. 4 divided into a number of divisions *a*, *a*, each of which denotes a single characteristic, and any number of which may be punched. The card so punched is placed in the machine shown in Fig. 3, the bed-plate of which B has an aperture *b* corresponding to each division of the card. A platen having corresponding apertures c^1, communicating with the space *c*, is then brought down on the card, a facing of india-rubber *u* being provided to avoid the necessity for extreme accuracy of adjustment. An adjustable stop H now lifts the valve c^5 and admits compressed air into the

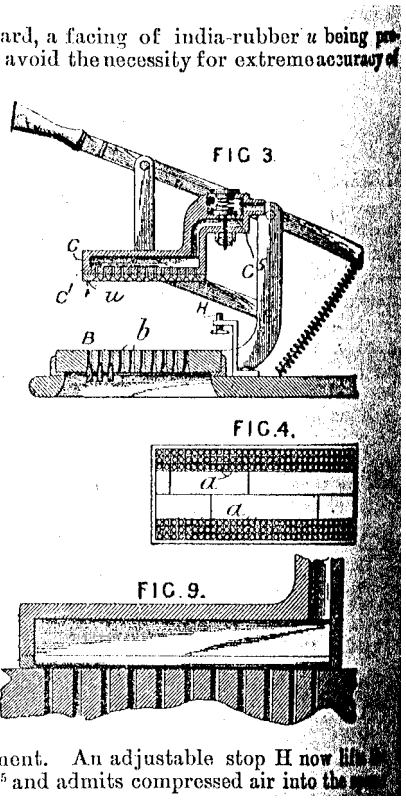

this air passes through the apertures c^1 and *b* sponding with the perforated divisions of the From these apertures *b* which are to be used lead to counters of any ordinary kind ope- pneumatically, or the pneumatic levers may ployed to actuate electric circuit closers to lete the circuits through electrically actuated ters. In a similar way the cards may be ed into groups by employing pneumatic power on the lid of one of a series of boxes into h the card is to be placed when removed from cording apparatus. The lid is then closed nd. Means may be provided for preventing pply-valve being opened if the card is im- rly placed in the machine. In a modification, latén is open at the bottom, as in Fig. 9, and ther the air passing through one tube may ployed to open a valve in another so that the er is not actuated unless the card is punched itions corresponding to both tubes.

© B O B Williams Printed22/11/2023 CalcPatents Ed. 1.doc

Hollerith H 10502/1901 Totals by category Punch card

10,502. Hollerith, H. May 21.

Calculating - apparatus. —Sum totals of numerical data under several heads are obtained by means of a series of adding-machines having electro-magnetic keys, any of which may be put into circuit by a pin box and a mercury cup switch, and punched selecting - cards. The construction of one of the adding-machines is as follows :—Ratchet adding-wheels 54 of thirty teeth, with three repetitions of zero and digits, are driven separately by pawls 64 on pivots 65 in a lever frame 62, which come into action because the keys trip latches 68 from them. The lever frame is connected by a link 72 to a crank-pin 73 on a wheel 74, and so is reciprocated when the wheel makes a revolution. Each key consists of an electromagnet 78 with a lever armature 82 hooking a tripping-pawl 86. The attraction of the armature lets the tripping-pawl obtrude into the path of the latch of the driving - pawl. Reversal of the wheel being prevented by check pawls 115, in the return movement of the lever frame the driving - pawls slip back over the teeth till they encounter a fixed rod 92, and, owing to their bevels, become detached again and re-latched. Carrying is effected by means of levers 96 with pawls 98; three pins 103 at the zeroes on the wheels disengage latches 100 from the levers, and a set of cams 111 set spirally on a shaft 108 operates them in succession. Rollers 89 below each pawl latch set the acting tripping-pawls back again into engagement with the armatures, and the backward movement of the hook 91 of the tripping-pawl under a pin 90 detaches the armature if it sticks owing to residual magnetism. A resistance coil 94 takes the place of a zero key. The adding-wheels are set to zero again by partially turning the shaft on which they are mounted, whereupon prongs 120 of a comb 119 on a bail 118 catch the carrying-pins. The crank handle by which this is done must be turned back to zero, or otherwise a gap will be left in the circuit. The

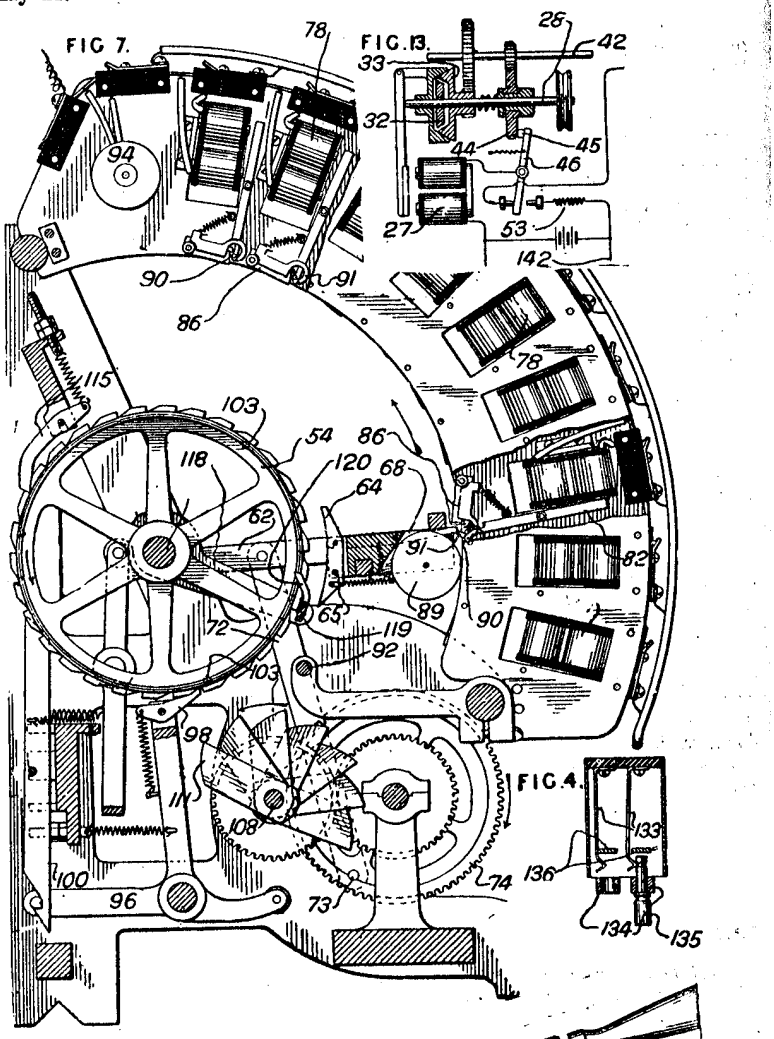

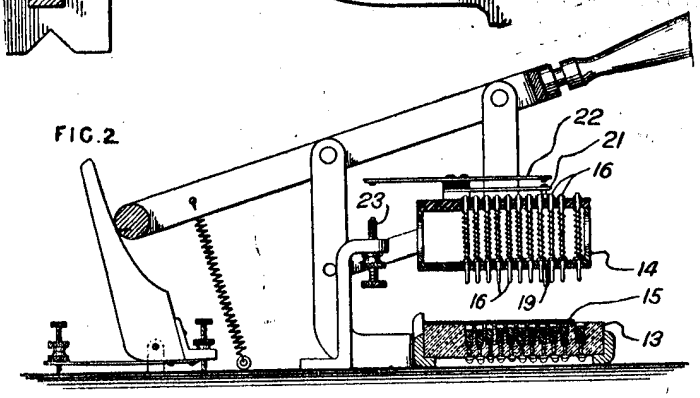

© B O B Williams Printed22/11/2023 CalcPatents Ed. 1.doc

controlling-switch, as shown in Fig. 2, consists of a base 13 containing rows of mercury cups (ten in each row) over which the punched card 15 is laid, and of a box 14 holding rows of spring pins 16 on metal bars 175, Fig. 18, which dip into the cups at every hole in the card. The cups and electromagnets 78 of the keys are wired each to each as shown diagrammatically in Fig. 18, and the rows both of electromagnets and of pins are joined up in staggered pairs by wires 95, 176 respectively, so that the selected electromagnets are in series. In the absence of a card, use of the switch will not send a current, as a special pin 19 enters a hole in the base and so will not thrust a contact-strip 21 against a bridge 22 between the box and the binding-screw 23. The controlling-switch also comprises rows of cups and pins according to the number of series in which the cards occur, and these are wired to a plug switch, Fig. 4, the cups separately to the fingers 133 and the rows of pins to the plugs 135. The number of a series is punched in each card, and the plugs are set in the bars 134 to the number of a particular series. Then, if a card of any other series is supplied to the controlling-switch, one or more of the dipping-pins is not in circuit through a plug, but through a bar 136, and a lamp or other signal calls attention to the discrepancy. The current, being supplied from the

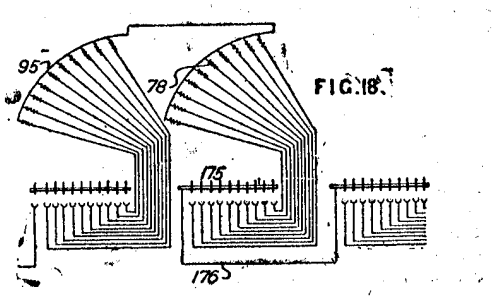

FIG. 18.

battery to the first bar of the controlling-switch through the wires 142, Fig. 13, returns from the last adding-machine through a switch 46 and an electromagnet 27. The electromagnet shifts a rotating shaft 28 so as to close a clutch 32, 33, by which the rotation is imparted to the shaft 42 of the adding-machine. A lug 45 on a wheel 44 in gear with the latter shaft accordingly recedes from the switch 46, and allows it to short-circuit the battery through the resistance 53, as the electromagnet of the keys have now done their work. Additional pins and cups are provided to cut out any one or more of the adding-machines when the cards are punched accordingly.

© B O B Williams Printed22/11/2023 CalcPatents Ed. 1.doc

Hollerith H 19372/1901 Statistics Punched card

19,372. Hollerith, H. Sept. 28.

FIG.12.

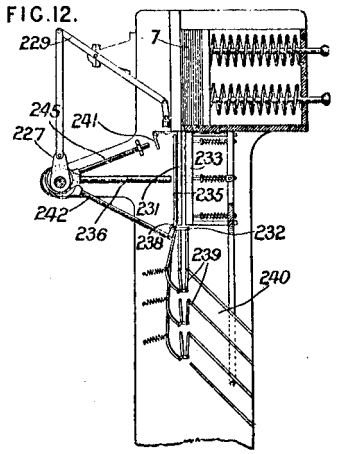

Calculating-apparatus.—Relates to the compilation of statistics and accounts by means of punched cards and counting or adding machines which have electric contact keys which are selected by holes in the cards; and comprises similarly-operated mechanism for sorting the cards. Reference is made to Specification No. 10,502, A.D. 1901. The keys, whether for compiling or sorting, consist of corresponding spring pins 62 and sockets 80 in opposing boxes 63, 79, the former being carried by a slide 68, and the latter by tongues and grooves 83. The socket-box being kept in place by buttons 84, the pin-box and a shelf 38 below are

reciprocated while the cards are fed from a pack 7 upon a table 6. All the movements are derived from a mainshaft which is coupled to a motor. In

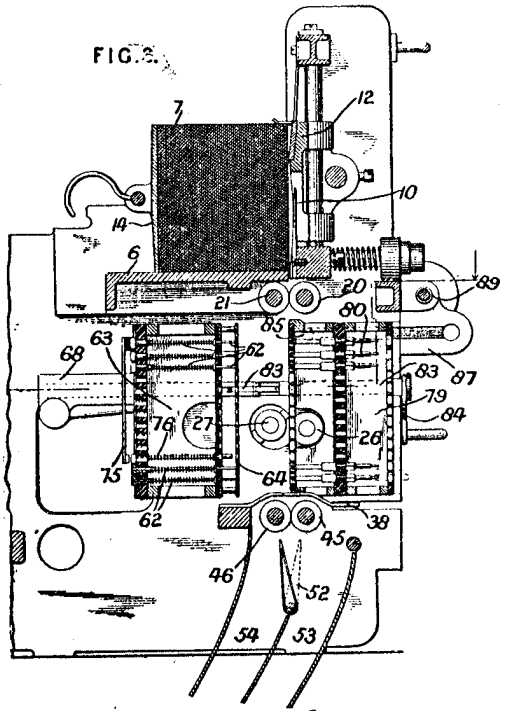

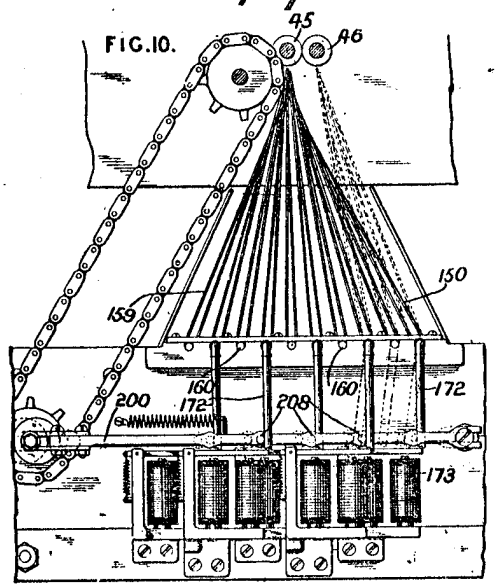

this action a pair of side fingers over which the pin-box passes set the card correctly on the shelf, and a spring plate 64 upon the pin-box holds the card against the socket-box while the pins enter through the punched holes and a special pin 76 not entering a hole completes the circuit by contact with a strip 75. The pack of cards is pushed to an adjustable stop 10 at the edge of the table by a back plate 14 which is pulled forward by weights or cords, and the feeding is accomplished by means of a vertical slide 12 and three pairs of gripping-rollers 20, 21, 26, 27 and 45, 46. The first and third pair are always pressed together, but the middle pair are parted to leave the card at rest on the shelf, and come together again to feed it to the third pair when the shelf is drawn. From the third pair the card passes to either side of a directing flap 52 into one of two shoots 53, 54, or it is guided into any one of a series of compartments by the mechanism shown in Fig. 10. Shafts 160 at the top of the partitions carry long wings 150 to 159 which all converge to the left of the feeding-rollers 45, 46 so long as arms 172 on the shaft are held by latches which constitute the armatures of electromagnets 173. So long as this disposition is not disturbed, the cards go into the right-hand shoot, but the electromagnets put into circuit disengage the corresponding latches and the released wings are thrown over to the right by springs so that a card falls down between the two groups and slips into the intervening compartment. A pair of reciprocating bars 200, bearing pins 208 to strike the arms 172, restore the initial conditions before the pin-boxes close on the next card. When the circuit is closed by a hand-key, the driving-clutch between the machine and the motor is brought into action by an electromagnet and lever armature, because the circuit is complete through a shunt, but when the selecting-keys close the circuit, a gap is opened in the shunt. To allow inspection or alteration of the electrical connections, the socket-box can be drawn out clear of the grooves 83 and turned to a convenient angle on the trunnions 85 in grooved clamping-cheeks 87 which are then tightened upon it by a screw 89. Fig. 12 shows an alternative and non-electrical sorting-mechanism. A lever 229 operated by a crank 227 feeds the cards 7 down into the interspace between a fixed perforated plate 231 and a pin box 233 which is reciprocated by an eccentric-rod 236. In front of each hole in the plate is a lever 235 which extends below the common fulcrum 238 down to a corresponding hinged switch 239 at the mouth of one of a tier of pockets 240. The pin for which the card is pierced pushes its lever back to a latch 241 so that the related switch is directed inwards, and when the pin is withdrawn, the card support 232 is turned down by an eccentric-rod 242 to let the card drop After the card has entered the pocket, a third eccentric-rod 245 trips the latch 241.

© B O B Williams Printed22/11/2023 CalcPatents Ed. 1.doc

Hollerith H 27072/1904 Statistics

27,072. Hollerith, H. Dec. 12.

Statistics, compiling mechanically; calculating-apparatus; counting-apparatus.—Record cards, such as those described in Specification No. 327, A.D. 1889, are sorted into groups according to the data they bear, and are likewise counted by combined electrical and mechanical apparatus. The card shown in Fig. 11 has twelve divisions A, B, . . . L for recording data with regard to the handling of freight by means of identifying numbers, the record being effected by punching out the required numbers. Some of these may represent weights, mileage, or the like and be afterwards totalized by the machine, the main operation of which consists in sorting the cards according to the markings in any one selected vertical row of figures. The cards are piled broadwise against the crossbeam 12, Fig. 5, and upon a table formed of a stationary part 15 and a movable part 17, which reciprocates on the rods 16 and has a raised rear strip 18 which at each forward stroke forces the lowest card through the aperture 24, the cards being pressed down by a weighted cover 22 sliding between guides 23. Feed-rollers 39, 40, 47, 49 then carry the card on until it is in position to be pressed forwards by the fingers 90 upon a travelling band 88, with slats 89, passing over two sprocket-wheels 84, one at each end of the band; the edges of the card enter a selected groove of the eleven formed in the sides 94, which are pivoted at the further end and are coupled by means of rods 97 attached to the lever 98. Fig. 6 shows these parts in cross-section, the slats riding on angle-irons 91 carried by vertical pieces 92 on the rods 93. Each of the grooves 96, Fig. 7, ends at the beginning of the corresponding box 6, 7, 8, 9, there being one compartment for each digit of a row and one for cards which have escaped marking. An electromotor drives the main shaft 56 of the machine, from which motion is communicated by spur-wheels and linkwork to the cam shaft 58, the slide 17, the sprocket-wheel 84, and the feed-rolls, the upper roller of each pair being spring-pressed against the lower. The collar 61 is fast on the cam shaft, and has jaws with adjustable screws 60 bearing on a projection 62 upon the cam 59 to permit of accurate setting thereof. As the card travels through the feed-rolls, the rack 102 on the lever 99 is slowly moved upwards by the cam from the lowest to the highest position, the pawl 103 being held out of gear by engagement of its end 106 with a slot in the armature 109 of an electromagnet 105; the roller 63 on the cam strikes the tail of the pawl lever at the commencement of each upward stroke of the rack to set the parts to this position. Two other

FIG. 10

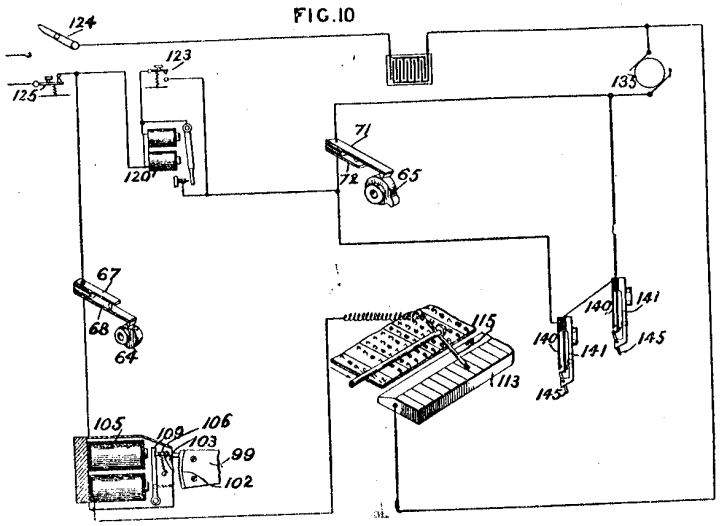

FIG. 11

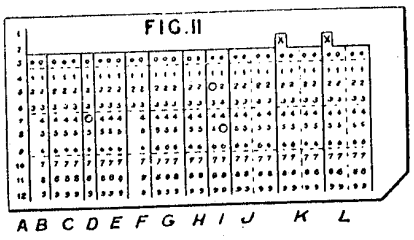

Hollerith H 4893/1906 Statistics

4893. Hollerith, H. Feb. 28.



FIG.7.

Calculating-apparatus; compiling statistics mechanically.—Improvements are described in the card systems for recording, sorting, and compiling data set forth in Specification No. 10,502, A.D. 1901, in particular, and also in Specifications No. 19,372, A.D. 1901, and No. 27,072, A.D. 1904. In these systems, each class of information to be recorded on the card has a row or rows of index points thereon alloted to it, and one or more of these points is punched out to represent either singly or

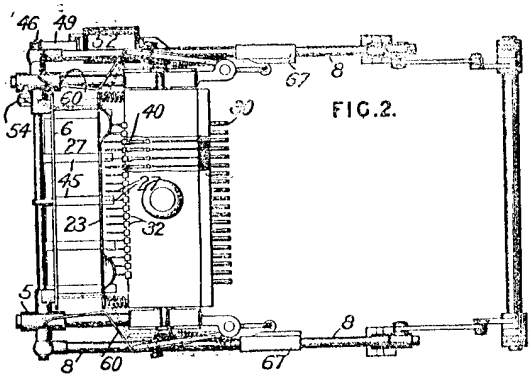

FIG.2.

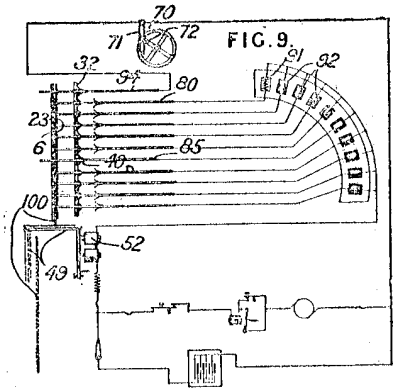

FIG.9.

in combination the number to be registered for that particular class; subsequently, the cards are passed into a selective electric contact-apparatus which registers and totalizes the punched numbers for all classes upon systems of counters, or may sort the cards according to the records they bear. The plan view, Fig. 2, shows one row of the selective contact-pins 27, and, in operation, a card is placed vertically to the right of a card plate 6 remaining supported upon fingers 45, the electric motor reciprocates longitudinally the slide rods 8 and sliding frame 5 carrying this plate, and the card is thereby clamped against a pressure plate 23, which has an aperture opposite each contact-pin. Simultaneously, the cam pieces 67 move away from the rollers shown, in order that the adjustable centring-arms 60 may spring into slots in the cards and pressure plates to ensure correct registration, and as the slide rods finish their stroke to the right the pressure plate is forced over the contact-pins and the card presses back all the pins for which it has not corresponding holes. Each pin moved slides through an insulating-bush in a metal plate 32, Fig. 7, connected to one pole of the battery, Fig. 9, and carries several spring arms 40 off the plate, the pin itself being connected to the other pole by means of the socket 30; in this way, the main switch 70, 71 being temporarily closed by the slide reciprocating mechanism, the electro-magnets 92 of such counters only as have their pins remaining in the normal position of the pin 85 will be energized, and only these counters will register, namely those corresponding to holes in the record card. The zero pin 80 merely completes circuit through a resistance 91, and a guard-pin 94 is also provided to interrupt the circuit should a card be sufficiently out of adjustment to force it in. To release a card which has registered, an electro-magnet 52 is included in the main circuit and upon the closure of the main switch the attraction of its armature releases an arm 49 upon the spindle 46 to which the supporting arms 45 are fixed; the arms are turned down by a spring, the card falls when unclamped, and the return of the sliding frame by means of a roller 54 relatches the arm and fingers in position to support the next card.

Hollerith H 27067/1907 Statistics

27,067. Hollerith, H. Dec. 7.

Calculating-apparatus; counting-apparatus; statistics, compiling or tabulating mechanically.—Relates to the system of indicating, sorting, registering, and checking statistical data described in Specifications No. 10,502, A.D. 1901, and No. 27,072, A.D. 1904, and consists principally in moving the record card relatively to a stationary contact-device, the duration of the energization of circuit thus effected being dependent upon the location of the index point in its column and determining the period during which a counting or like apparatus shall be driven by a motor. In the form shown in Fig. 1, the record card 1 is fed between a conducting cylinder 4 and contact-fingers 15, 16, 17, one for each row of index points, the main switch 21 being kept closed by the arm 24 so long as the card is passing. Whenever one of the fingers comes into contact with the cylinder through a punched index point, the relay 25, 48 is energized and maintains circuit through the actuating electro-magnet 35 until the card passes out and the main switch is opened. During this time the corresponding counter-wheel 55 is clutched to a rotating shaft 61, and thereby actuated. Fig. 2 shows a modification in which the armature 72 of the relay electro-magnet is employed to perform the work, which in this case consists in arresting the spring-effected movement of a definite number of sorting guides 77, in order that the record-card 1 may fall into the proper division. In another modification, the action between the record-card and the finger may be mechanical only, the movement of the finger being utilized for momentarily closing a switch, and a relay arrangement, as before, for maintaining the circuit.

FIG.2

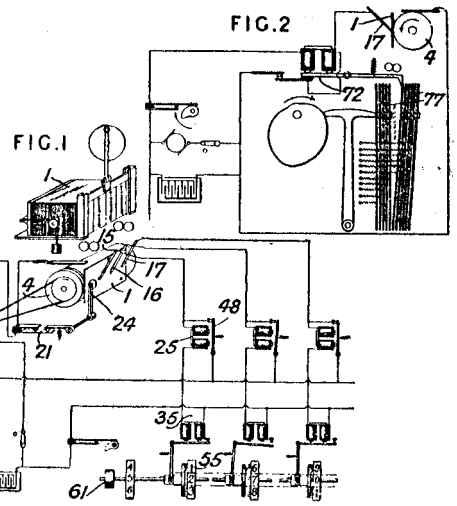

FIG.1

Hollerith H 20317/1909 Statistics

0,317. Hollerith, H. Sept. 4.

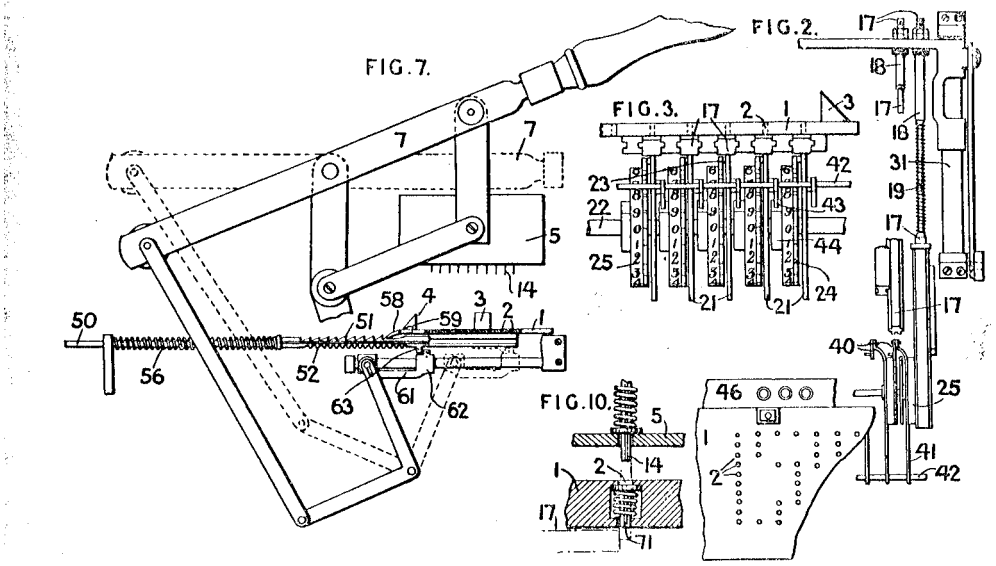

Statistical machines.—The data or items denoted y punched holes in the record cards of the Hollerith tabulating systems are registered by means of mechanically-operated apparatus, that described eing intended for operation with records in which he value of the items is determined by the location of the index points in rows, and embodying a eries of registering elements of different orders or enominations. The record cards are placed on a late 1 having positioning stops 3, 4 and perforations 2 for registering with the index points on the ard and with the spring pins 14 of a platen 5, hich is suspended by a link 6 from a counter-eighted lever 7 pivoted to a standard 9, a link 11 eing added to steady the platen. Preferably ten ins are placed in each transverse row in the box nd ten points in each row on the card, one point nly being punched in each row in preparing the ard. When the platen is depressed, one pin in ach row passes through the card and plate, the thers being held up.

Counting-apparatus.—Below the bed-plate are ranged a series of register-actuators consisting of ars 17 normally held extended from sleeves 18 by prings 19, there being an actuator for each row of ins. Each bar 17 carries a rack 20 gearing with a ector 21 loose on a shaft 22 and carrying a pawl 3 for engaging a ratchet-wheel 24 secured to a egistering-wheel 25 which carries on its periphery wo sets of figures from 0 to 9. The sleeves 18 are upported by a cross-bar 28 extending across the achine and movable in end slides 31 by the lever 2 which when operated moves the slides forward ntil they contact with the pins projecting through he platen. On the return movement, the registers re therefore turned through amounts corresponding to the position of these pins. In a modification, shown in Fig. 7, only one hand-lever is mployed, together with spring-pressed register-ctuators normally locked by pawls and released on he descent of the platen. These actuators 50 have teeth 51 on the upper, and teeth 52 on the lower, sides and springs 56 press them forward,

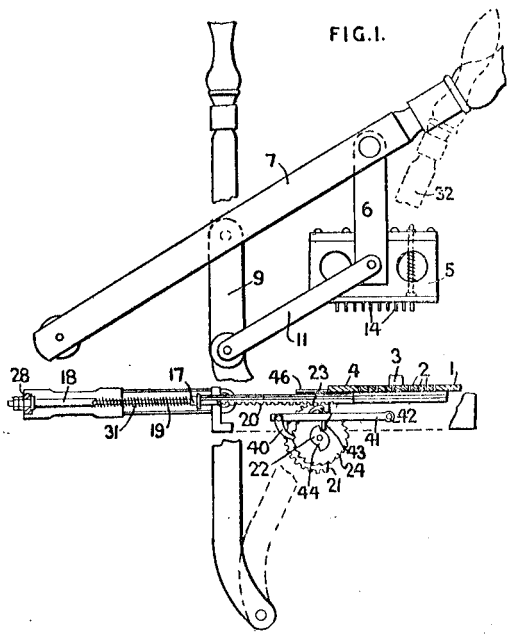

they being held by pawls 58 on the bed plate, but released, on the descent of the platen, by depression of the heels 59. The lower teeth 52 actuate the registers when the slides are returned by the return of the hand-lever 7, which is connected by links to slides 61 carrying a cross-bar 62 which engages projections 63 on the slides. Since all the pawls 58 are tripped, the first tooth of each rack 51 is made shorter than the others, and when the first, that is, the zero pin of a row passes through a card, the resulting movement of the corresponding slide is insufficient to actuate the registers. Fig. 10 shows a construction in which intermediate spring-

© B O B Williams Printed22/11/2023 CalcPatents Ed. 1.doc

Hollerith H 15475/1911 Statistics Punch card

15,475. Hollerith, H. July 3.

Statistical machines.—Relates to apparatus for compiling and tabulating statistics, of the kind in which a card punched according to the data is fed past an electric contact while a selective commutator is simultaneously operated. In the present apparatus the data in any column or in different columns may be combined in any way by correspondingly arranging the circuits. The operation is effected thus: as each characteristic of a unit is isolated, one or more corresponding switches are closed; when all have been closed, a current is passed to operate the indicating or sorting means. For each column of data there is a brush such as 6, 7 and a commutating ring 18, 19, the

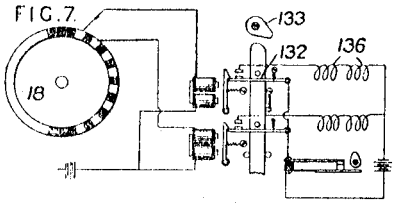

circuits of which include relay magnets 50 . . . 55, holding the circuit closed for series of relay magnets 56–65 which control the circuit to the tabulating-magnets 70 . . . 75. A main

cam 14 only closes the relay circuit while a card is passing and a cam 85 closes the circuit after a card passes its final operative position, bringing into operation at this moment the correct tabulating-counter 70 . . . 75, and a sorting-shoot 89 for separating all the cards

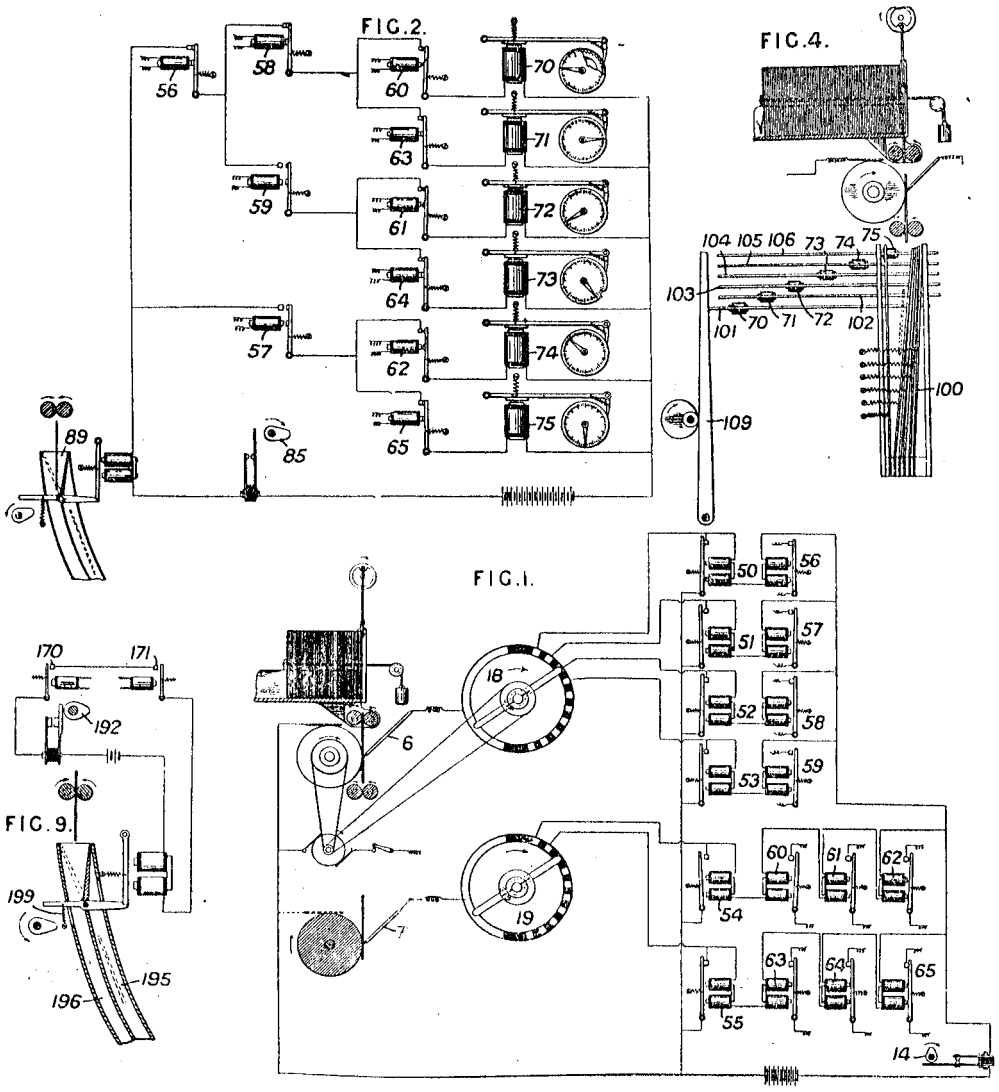

with the given data. The series relay magnets are connected up so that the magnets for incompatible characteristics are in parallel and the compatible in series. Instead of tabulating-counters, the magnets 70 . . . 75 may control sorting-guides 100, which are spring-urged till arrested by one of a series of stop bars 101 . . . 106 engaged by latches directly operated by the magnets 70 . . . 75. A cam-operated lever 109 restores the bars to position before the advance of a fresh card. In place of some of the relay magnets, mechanical means may be employed, as for example spring-urged levers 132, Fig. 7, which close the circuits for magnets 136 and which are restored to latched position by a main cam 133. For verification of any sorted set of cards, any card with an impossible combination of characteristics is

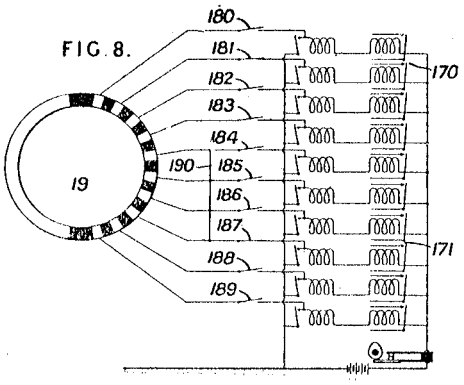

© B O B Williams Printed22/11/2023 CalcPatents Ed. 1.doc

Hollerith H 16432/1911 Print punch cards

16,432. Hollerith, H. July 17.

Counters with recording-apparatus; numeral-bearing elements.—Relates to the terminal visual or printing numeral-bearing elements of counting-apparatus such as may be used in statistical calculating-machines, telephone-exchange counters, &c., wherein these parts are normally detached from the totalizing-wheels and are positioned at will into agreement with the total carried by the totalizing-wheels by means of manually-energized spring parts. Each totalizing-wheel 7, 8 is actuated by a pawl 12, reciprocated by an electro-magnet 10, which engages the receiving ratchet-wheel 7, with which also engages the transfer-pawl 24 of spring-lever and pawl transfer-mechanism actuated by a snail cam 8 upon the next lower totalizing-wheel. The numerals 42 are upon segments 40, with stepped sectors 44, mounted loosely upon a shaft 41 and normally retained in the position of no-indication shown by means of a yoke 50 acting in opposition to springs 45, of which there is one for each segment, there being one segment with ten numerals assigned to each totalizing-wheel. When it is required to set the segments in accordance with the total standing on the totalizer, a handle 52 is thrown over, whereupon a pivoted controlling-bar 64 is moved away from spring-urged feeling-fingers 60, one for each denomination, which swing upon pivots 61 until projections 70 thereon are arrested by the snail cams 8. The handle also withdraws the yoke 50 and allows the springs to rotate the segments until the stepped sectors are arrested by the extremities 71 of the feeling-fingers, in which positions numerals corresponding with the total upon the totalizing-wheels are presented to the reading-aperture or the printing point. To record the total, an impression roller 90 is mounted upon a block 91 adapted to move transversely in guide-bars 92. An inking-ribbon 80 passes between spools 81, 82 and a record sheet 85 is manually fed over a guide-plate 86 and between feed rollers 87, 88. In a modified arrangement, the transfer-pawls are placed upon the feeling-fingers 60 and the controlling-bar therefor is dispensed with, so that the projections 70 upon the fingers bear constantly against the snail cams. Alternatively, the numeral-bearing segments may engage the snail cams directly.

FIG. 2.

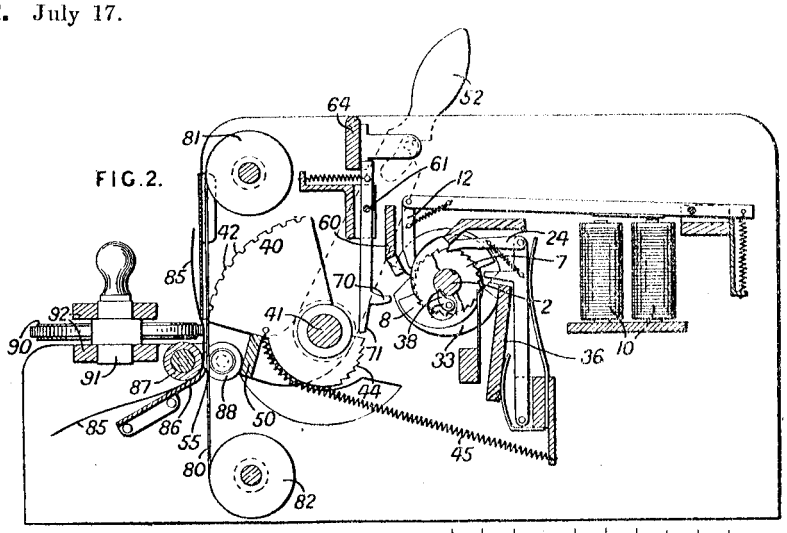

FIG. 10.

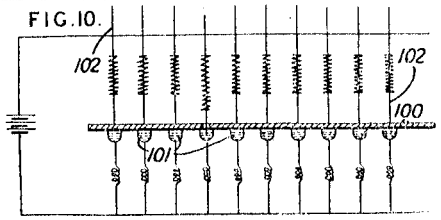

Zeroizing-mechanism.—Upon the rotation of the main spindle 2, by means of an external handle, a recessed disk 33 fast thereon throws a spring plate 36 backwards so as to put the transfer levers out of action, and the rotation of the spindle effects engagement between grooves therein and spring-pawls 38 upon the totalizing-wheels, whereby the lowest wheel is returned to zero and the remainder to "9." As the handle completes a half rotation, the spring plate releases the transfer levers, which then bring all the higher wheels to zero.

Statistical machines.—The application of the apparatus to the Hollerith tabulating system is indicated diagrammatically in Fig. 10, wherein a punched record card 100 controls circuit-closing devices consisting of mercury cups 101 and spring pins 102.

© B O B Williams Printed22/11/2023 CalcPatents Ed. 1.doc

Holmes & Hodge 30173/1904 To design rafters

20,173. Holmes, W. P., and **Hodge, L. M.** Sept. 19.

FIG.1.

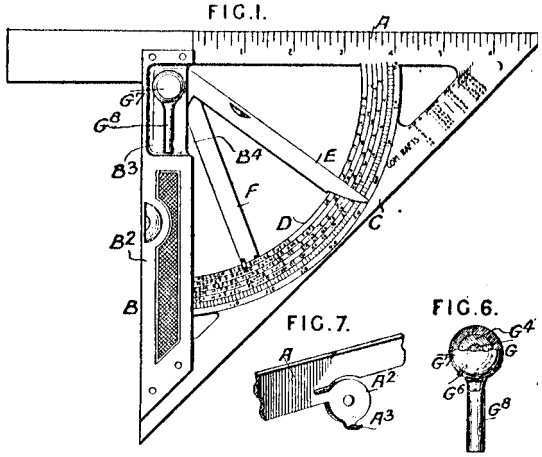

FIG.7.

FIG.6.

Calculating-apparatus; angle gauges; measures of length. — A measure of length is combined with an angle gauge and a level, as shown, for marking the bevels and cuts of rafters, hoppers, and the like, the apparatus being also available for determining the angles between the sides of polygons. The right-angled triangle A B C has length graduations along the edge A, to which the side B, consisting of two separate parts, is fixed at right-angles, and the segment D has graduations indicating polygon-side and mitre cuts, hopper and raking plancer edge cuts, and degrees. On the face of the side C are tables giving the length of rafters for various rises, and on the reverse of the parts C, D are similar scales for each part. There are indicating-arms E, F for the graduated arcs, which are normally housed between the parts of the arm B, the pivot bolt G being held in one part and passing through the opening of the clamp-tongue A^2 on the bar A. The head G^1 of the bolt has a lug with recesses which engage and lock with the lug A^3 on the clamp-tongue, and a round nut G^4 screwing on the threaded end of the pivot bolt G is fastened by a set-screw G^6 to the head G^7 of a wrench, having a handle G^8 for clamping and unclamping the arms E, F, playing in a recess B^3, adjacent to which is a cut-out portion to allow the operator readily to view a line made on one face of a rafter. A spirit-level is let into the edge of the arm B, and the instrument may be used for

FIG.4.

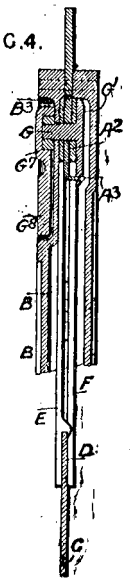

obtaining the lengths of the sides of polygons, reading the angle of any particular cut, and the like.

Holloway W M 21049/1913 Adder

21,049. Holloway, W. M. Sept. 17.

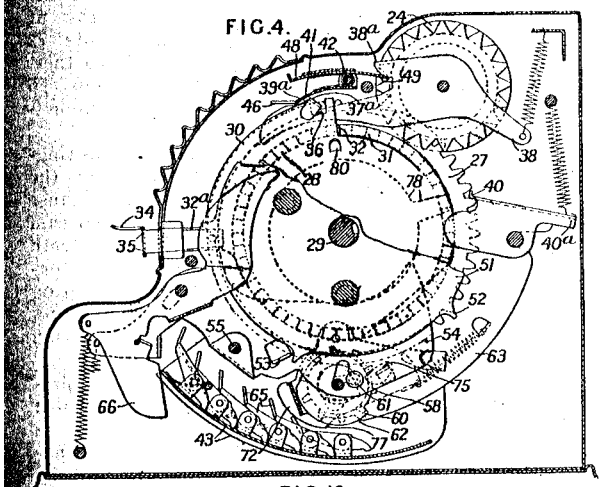

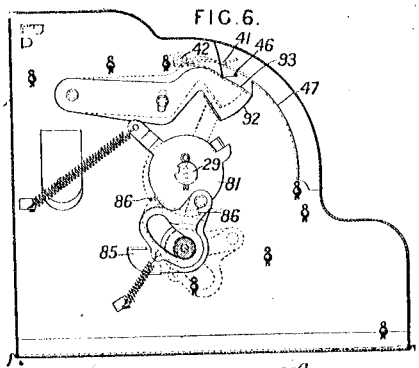

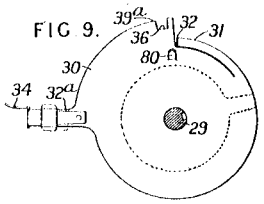

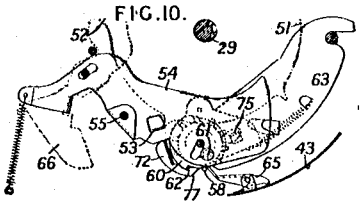

Adding-apparatus with operating-means. — A multiple-bank adding-apparatus, comprising differentially-set pawl-carrying disks which are restored by means of an operating bail or frame, thereby driving the toothed wheels co-operating with the pawls, is provided with an interlock for the setting and zeroizing members, and for the unmoved setting-disks and ope-

501

Holophane Ltd & Berson T 107228 of 1916 Circ slide rule for lighting

107,228. Holophane, Ltd., and **Berson, T.** June 16, 1916.

Slide-rules.—Apparatus for use in connexion with electric or other lighting problems involving various types of glassware or other reflectors, to determine the intensity of the lighting units in lumens, comprises a rectangular card *a*, Fig. 1, and two circular ones *d*, *h*, Figs. 2 and 3, which are superposed on the first and are adapted to revolve about the centre *c*. A circle *b* on the card *a* is provided with four sets of continuous logarithmic scales each extending over a quadrant and representing respectively units, tens, hundreds, and thousands of lumens, portions of the units and thousands scales overlapping. On the disk *d* are formed scales *e*, *f* graduated to represent respectively the area of the rectangle to be illuminated and the side of the corresponding mean square. An aperture *g*, provided with reading arrows *p*, *q*, is formed in the disk *h* through which the scales *e*, *f* are read. Also carried by the disk *d* are scales *r*, *w*, the former being adapted to determine the height of the lighting units above the working plane and the latter to determine the drop from the ceiling in the case of indirect lighting. The scale *w* is viewed through an aperture *x* and the scale *r* through apertures *s*, *t*, *v* in the disk *h* corresponding to focusing, intensive, and extensive types of reflectors. A scale *k* on the card *a* is graduated in accordance with the optical properties of different types of glass ware, only the graduations necessary in practice being shown. Such a scale is determined from the formula $L = I \times A \times \frac{1}{K}$ where L = the intensity per lamp in lumens, I = the average intensity of illumination desired in foot candles, and K = the utilization efficiency. In operation, an arrow *m* carried by the disk *d* is placed opposite the type of reflector employed on the scale *k*, the disk *h* is rotated to bring the arrow *p* or *q* opposite the area to be lighted or the mean side of the square corresponding thereto, and the number of lumens required is read off on the scale *b* opposite the graduation on the scale *r* corresponding to the intensity of illumination in foot candles. The invention may be applied to slide-rules other than circular.

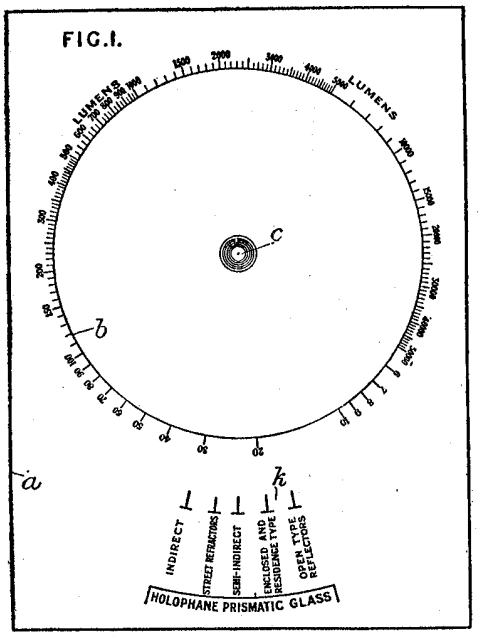

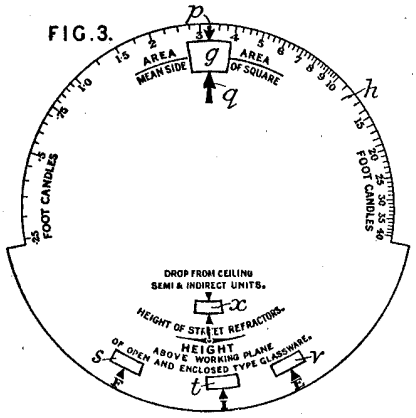

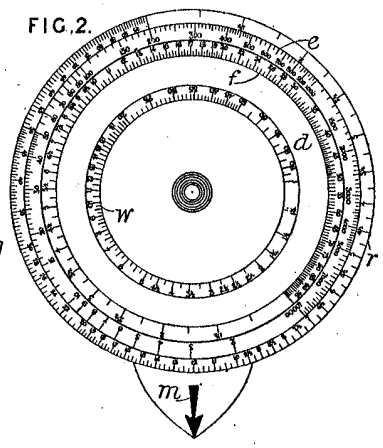

27

Holt P W M 19047/1895 Solve right triangle

19,047. Holt, P. W. M. Oct. 10.

Calculating apparatus.— The apparatus is for solving right-angled triangles having giving one side and an acute angle, and it is more especially applicable to finding latitude and departure in surveying or navigation. A hemisphere Z can be turned about a vertical diameter as axis by moving the arm E into any required position (according to the acute angle given) on the quadrant W, X; and it can be rotated about its principal axis by means of the handle K on the shaft Y. J, J are two wheels of diameter equal to that of the hemisphere; they are carried in brackets N pivoted at P and connected by a spring so that the wheels are pressed upon the surface of the hemisphere. The shafts carrying the hemisphere Z and the wheels J, J are provided with worms *y*, O, O which gear with crown teeth on the recording wheels G, H, H, and the flanges of the wheels and hemisphere are themselves graduated. C is a trigger device by which the wheels J, J and worms O, O may be thrown out of engagement, where upon the registering wheels being weighted return to zero by gravity. G is mounted frictionally on its axis for zeroising. Suitable clamps and verniers are provided. When the arm E has been adjusted according to the acute angle of the given triangle, the handle K is rotated until the scales on the wheel G and hemisphere Z show the length of the hypotenuse. The pairs of wheels J, H, J, H will then indicate the lengths of the sides.

FIG.1.

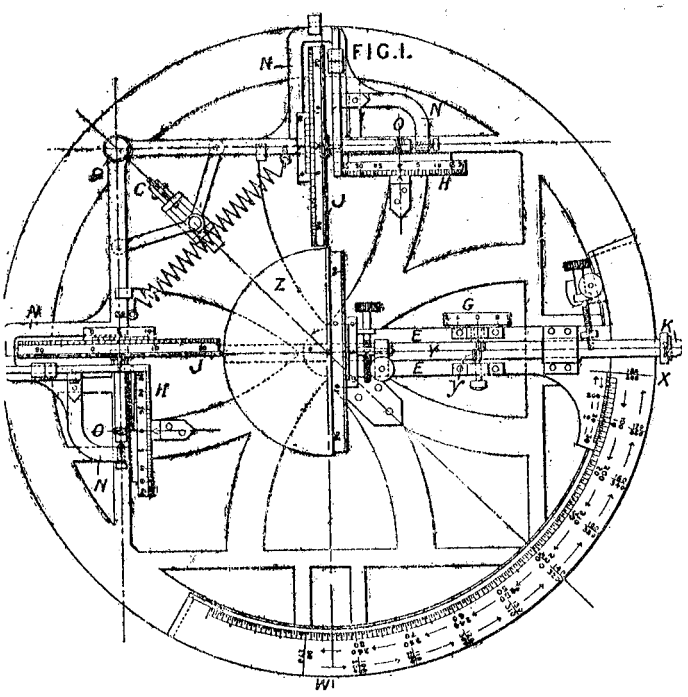

Honeysett & Stanley 4803/1890 Slide rule for flow in pipes

4803. Honeysett, A., and **Stanley, W. F.**
March 27. *Drawings to Specification.*

Slide-rules. — The slide-rule is marked with logarithmic scales for solving problems respecting the flow of liquids in pipes, and is provided with a transparent courser for reading. Instructions for using the scales are printed on the back.

Hook E T 19638/1914 Trig calc for navigation

19,638. Pritchard, W. E., [*Hook, E. T.*]. Sept. 10.

Plane-trigonometry calculators.—A navigational instrument comprises a base-plate *a* secured horizontally with a centre line *b* in the fore-and-aft direction of the ship, a pair of scaled arms *g*, *h* carrying sights *i*, *k* and mounted on a common central pivot *f*, a longitudinally and transversely sliding scaled rule *o*, and a scale *m* showing the transverse displacement of the rule *o*. The rule *o* slides in a block *n*, which slides on the scale *m* and has a reading-edge *p* coincident with the athwartships centre line of the base-plate. A rotatable rim *c* marked with points of the compass, or degrees may be provided on the base-plate.

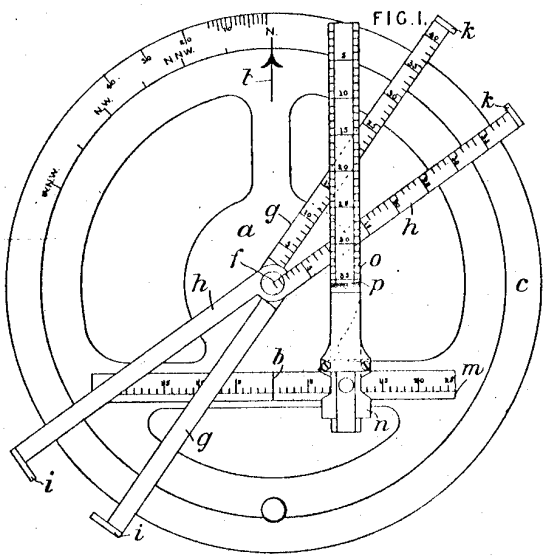

Hopkins H 18058/1907 Add Multiply List

18,058. Hopkins, H. Aug. 8.

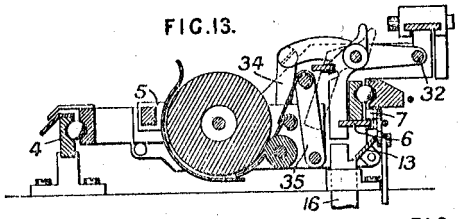

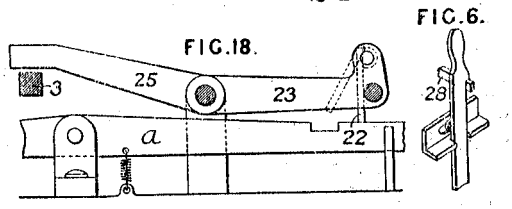

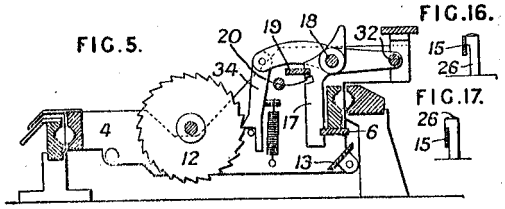

Calculating-apparatus.—Relates to the application of means for adding, multiplying, and listing numerical items in column form to typewriters which is further described in Specifications Nos. 18,320, 18,321, and 18,322, A.D. 1908, and in particular to the mechanism whereby the typewriter line and lateral spacing arrangements are controlled in order to obtain the desired movements of the forward totalizing-counters. Of these counters there are three placed at intervals upon a main transverse counter spindle carried by the paper-carriage of the typewriter, whereby the lateral

Hopkins W W 6193/1894 Add Subtract

6193. Hopkins, W. W. March 27.

Calculating apparatus.—Performing addition and subtraction. Fig. 6 shows a cross section of the machine. Within a frame, formed by the base 65 and standards 66, there is a second frame for some of the mechanism formed by cheeks 68, and capable of

FIG 58.

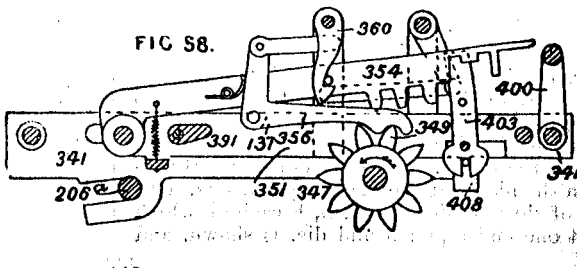

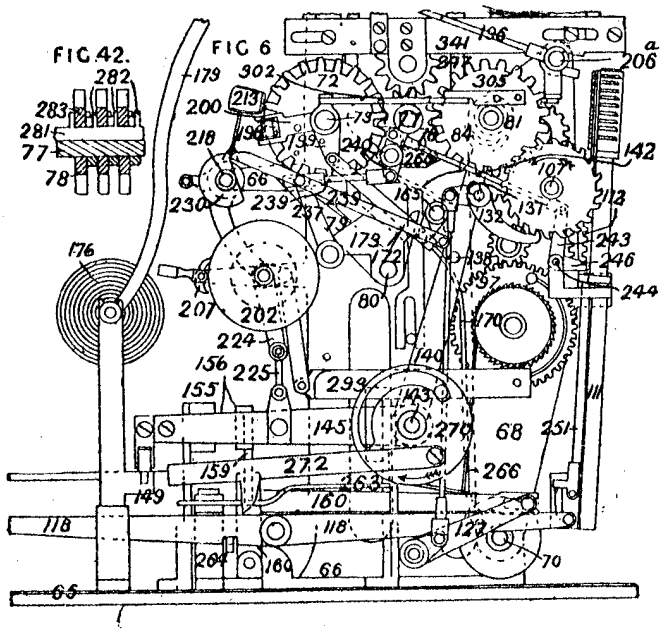

rocking slightly on a shaft 70; but, except where stated otherwise, it is to be understood that the various shafts of the mechanism are fixed or journalled in the main frame. There are two sets of digit wheels 72, with spur wheels attached, on a common shaft 73, and in gear with two corresponding sets of idle wheels 78 on a shaft 77 behind. The one set has the digits occurring in direct order twice, and is used for adding or subtracting; the other has the digits repeated in reverse order for printing the items added or subtracted. A shaft 81 in the rocking frame carries a sleeve, which is provided with two wheels 84 for engaging the corresponding idle wheels of the two sets. It is shifted along to gear with each pair in succession, and, wherever in gear, is turned so as to add or subtract the required digit for that place of figures. The necessary direct or reverse rotation is derived from a spring motor 97 in the rocking frame through a double train of wheels and a clutch shifted by hand. To determine the amount of rotation, one of ten keys 118 is struck, whereby one of ten racks 112 in hanging guides 111 (on the rocking frame) is put into gear with a corresponding pinion on a shaft 107 of the motor train. After putting the rack into gear, the key disengages a detent pawl 132 from the motor through the intermediate action of a bail 127 crossing all the keys and linked to the detent. The motor then runs till the rack in gear reaches the limit of its path in the guide. Releasing the key ungears the rack. The rack of the zero key has no play, but acts as a pawl. Pawls 79, separately pivoted on a shaft 80, are applied to the wheels by springs pressing their roots in a comb plate 172 upon bridges 173. But when a key is struck, the pawls of the two digit wheels under operation are disengaged by two cams sleeved on a shaft 165. The crank on the shaft and the key are connected by the rod 170. The pawls of the adding wheels engage the spur teeth, but the pawls of the printing wheels only engage lateral pins, as shown, when the wheels are at zero, as, after a wheel has printed, it can be left free. After adding and printing each number, a handle-frame, not shown, is pulled and put back, giving rotating reciprocation to two cams 270 which positively operate the rocking frame 68. The motor spring, being in a barrel connected by a cord 266 to one of the cams, is thereby wound up, and the carrying mechanism is operated as subsequently described. A sheet of paper, led up from a roll 176 in front of the machine, is struck against each printing wheel in succession by a resilient hammer 213 on a shaft 218 which ends in a spring. The hammer is raised to strike, and the shaft's spring is put in tension, by the thrust which a bar 235 transmits from a crank on the shaft 165 to a segmental disc 230 on the hammer shaft. When the sliding rack, applied to the motor by the key, reaches the limit of its stroke, it trips the thrust bar 235 from the segmental disc by jerking a train of links and levers 237, 239, 240, 242, 243, and 246. There is one lever 246 for each rack, and a hook rises from it into the path of the rack. These levers and the lever 243 are arms on a common shaft 244. When the key is released, the thrust bar is left free to fall owing to the fall of the rack in its guide, and is pulled again behind the segment disc by the fall of the bail over the keys. The zero key acts through a rod 251 depending from the lever 246 of the next key. A bail 260 in the hammer-tripping train justifies the wheels before the printing takes place. After all the figures of a number have been printed the paper is drawn up by a ratchet feed whose lever is connected by a link 196 to the racking frame 68. The roll of paper and the feed gear can be shifted along the machine with a frame 179, so as to take the total from the adding wheels by a second hammer sleeved to the first. An inking ribbon between winding drums 202 at the ends of the machine runs over guide pins 200 and rollers 198 on bell cranks 199 loose at the ends of the shaft 73 which, when a key is operated, swing the ribbon under the hammer and then drop it to expose the impression. The ribbon is wound from either drum to the other by a ratchet feed with reversible pawl 207 on a lever which, like the paper-feed lever, is linked to a part 293 of the rocking frame 68. A frame 145 is shifted along a shaft 143 and a rail 149 by rack and pinion gear with a driving spring 155

More text omitted

Hopkins W W 20133/1901 Adder

20,133. Hopkins, W. W. Oct. 8.

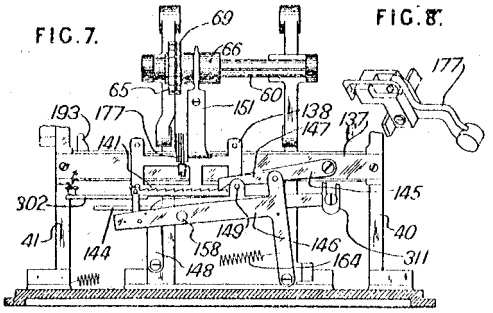

Calculating-apparatus.—Fig. 12 is a view of the left-hand end of the machine, and Fig. 46 is a sectional view from the left. Fig. 38 is a view of mechanism at the right-hand end of the machine. Fig. 7 is a rear view of gear-shifting mechanism, of which Fig. 8 shows separately a detail. Fig. 22 is a sectional view of the adding-wheels with means

7

Horsburgh E M 11023/1904 Polar plotting chart

11,023. Horsburgh, E. M. May 13.

Calculating-apparatus.—A mathematical chart or "polar plotting-paper" is marked with a series of concentric circles and radial lines as shown. The radial lines set off angles made with the prime radius in radians and parts ; or in degrees, a scale of conversion into the contrary method of measurement being provided in each case. On the prime radius, and on that perpendicular to it, as diameters, circles C, D are described so as to cut off, on the radii, lengths proportional to the cosines and sines of the angles they make with the prime radius ; the diameters are divided decimally.

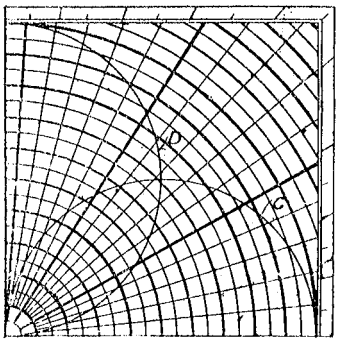

Horsfall A E 22829/1904 Scale and clinometer

22,829. Horsfall, A. E. Oct. 24.

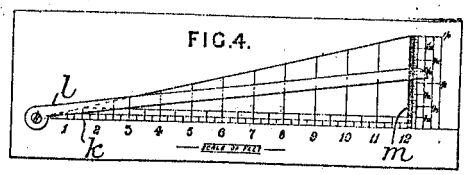

Calculating-apparatus.—Fig. 4 shows a calculating-scale used in connection with a clinometer. Units of length are marked along the line *k*, and a pointer *l* is pivoted at the zero mark. The pointer is moved along the line *m* to the reading given by the instrument. The vertical distance between any graduation of the line *k* and the pointer gives the error for that distance.

Horvath A 27261/1898 M D Napier's bones

27,261. Horvath, A. Dec. 24.

Calculating - apparatus.—The apparatus is for multiplication and division. Eleven bars of square section, six only of which are shown in Fig. 1, are provided, to be laid together side by side. The first bar A is marked 1 to 9 as shown, and the others B are marked on all their faces with the multipler by 1 to 9 of the index number at the top, the "tens" being placed in the upper left halves and the "units" in the lower right halves of the squares into which each bar B is divided, and separated by diagonal lines. In Fig. 2 the apparatus is shown arranged for the multiplication of 647 by 3 and also by 67. The columns are added diagonally beginning from the right. For example, in the multiplication by 67, 9 is the units', 8, 4, 2 the tens', 2, 2, 4, 4 the hundreds' column, and so on. Special rules for facilitating the selection of the columns are given in the Specification, and the units halves of the squares are coloured red. As additional aid, special patterns may be employed for different cases, cut away so as to expose only the required figures. The patterns are mounted to slide in a frame which can itself slide at right-angles to the direction of

movement of the pattern. Division is performed in the usual manner, the apparatus being used to facilitate the necessary multiplications.

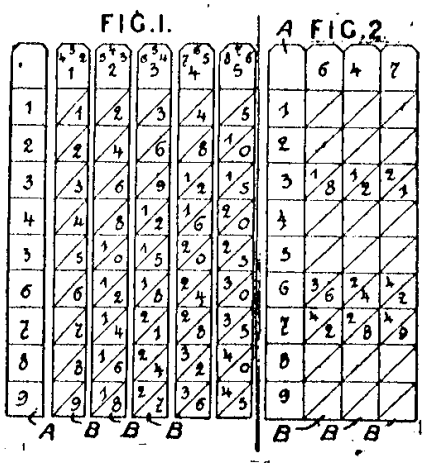

Hoskins B 16997/1907 Adder printer

16,997. Hoskins, B. July 24.

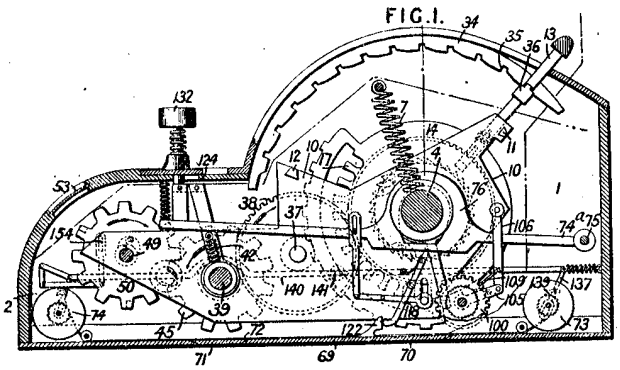

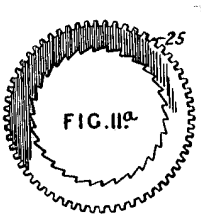

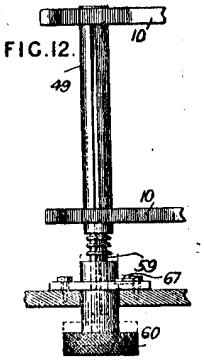

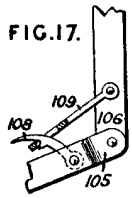

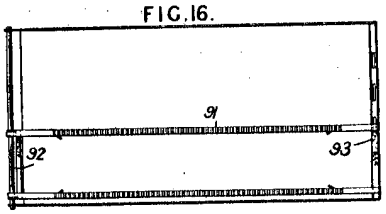

Calculating-apparatus; counting-apparatus.—In a lever-set, independently operated, multiple-denomination, printing adding-machine, the setting-parts adjust item segments bearing printing-types and simultaneously actuate the totalizing-counter, which has both printing and visible numeral wheels. The machine comprises: (1) setting and item parts; (2) a casing and movable computing frame; (3) a totalizing-counter and associated transfer mechanism; (4) zeroizing-mechanism; (5) a printing and resetting-key; (6) a paper-bearing table on which the machine rests, with means for line-spacing the items; (7) total-printing arrangements; and (8) inking-ribbon and feed and reversal mechanism. Fig. 1 shows the apparatus in sectional elevation with the printing and resetting key 132 towards the front and the setting-levers 13 at the rear of the casing. (1) The setting-elements consist, for each denomination, of a lever 13 radially spring-held in a slot on the corresponding item-printing segment 14, and having a detent 36 for engaging with the recesses 35 beneath the setting-lever detent plates 34. (2) Within the casing 1, 2 of the machine there is a frame formed by the side plates 10, connected by cross-bars 11, 12, and the shafts 4, 37, 39, 49, of which the shafts 4, 39 carry the item-wheels and totalizing-wheels respectively, and are extended into slots within the sides of the casing, the springs 7, 42 normally drawing them upwards together with the frame. (3) The item segments have each a ratchet connexion with annular gear-wheels 25, Fig. 11a, which are actuated upon the forward movement of the setting-levers and transmit the motion through idlers 38 to total-printing wheels 45 upon the shaft 39, the transfers between which are effected by single tooth wheels 50, Fig. 1, gearing therewith and placed slightly out of alinement, whereby they each gear an adjacent pair of wheels. These wheels carry numerals on the end faces of their teeth to indicate the total through an aperture 53; and in the case both of these and the total-printing wheels, the teeth are alternately long and short, whereby a plurality of engaging teeth is obtained, while the long teeth only are used for bearing the numerals. (4) To zeroize the total-wheels, the shaft 49 is longitudinally grooved and all the wheels 50 have internal spring pawls whereby they may in turn be caught up as the shaft is rotated forwardly; the position of rest of this shaft is that in which all these wheels indicate zero, and is determined by reducing and slotting the end 59, Fig. 12, of the shaft and placing on and in engagement therewith a spring-held finger-knob 60, which must be pressed in before its pin 67 can move from the slot in a slidingly-mounted plate. To admit of this, a slot is provided in the side of the casing at this point. (5) An inking-ribbon 72 passes over the printing-apertures 70, 71 and is wound upon two rollers 73, 74. In order to depress the movable spring-supported frame which carries the computing parts upon the paper, which is placed beneath the bottom plate 69, a key 132 is depressed and forces down a supplementary frame 74a, 76 pivoted at the rear upon a rod 75, whereby the whole computing frame is moved downwards about the shaft 39, a detent bar being simultaneously forced into the teeth 17 of the item-wheels before

Howieson J T & Spiekerman F 18853/1902 Adder typewriter

18,853. Dymond, G. C., [*Howieson, J. T.*, and *Spiekerman, F.*]. Aug. 27.

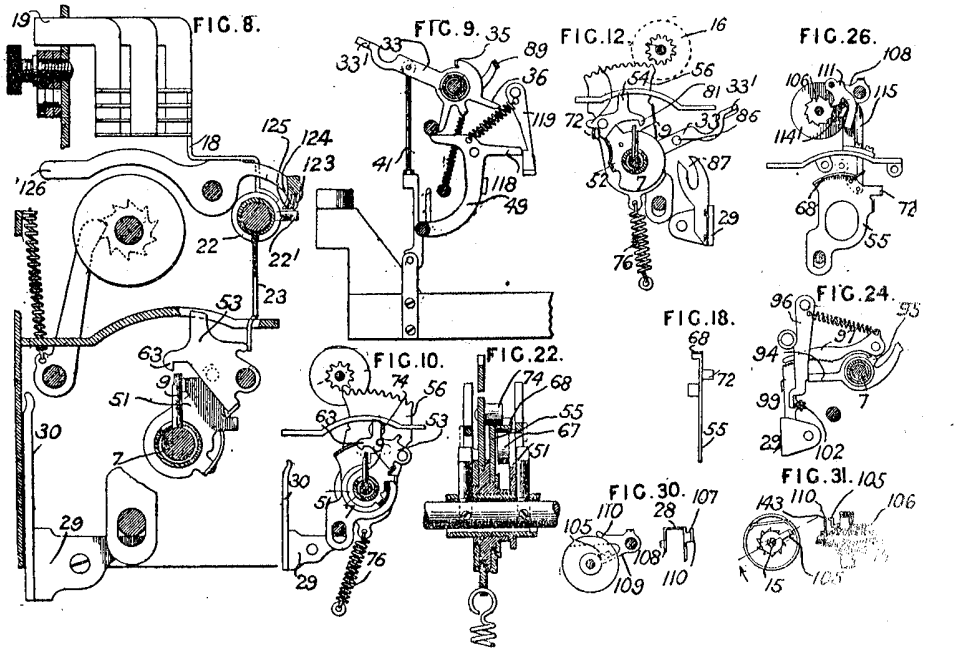

Calculating-apparatus.—Relates to calculating-apparatus which is especially designed for use as an attachment to a type-writing machine, although it may be used separately. As described in connection with a type-writer, when the numeral keys are operated, the registering devices are thrown into position by a spring-pressed cam-plate, which is adjustably mounted upon a bar carried by the paper carriage or other moving part of the machine actuating the ends 19 of a series of tripping devices 18. The depression of the numeral keys also actuates, through the connecting-links 41, the

P 11860 225 P

more text omitted

Howieson J T 28058/1910 Adder, motorised, on typewriter

28,058. Howieson, J. T. *Dec. 29, 1909.*

FIG.24.

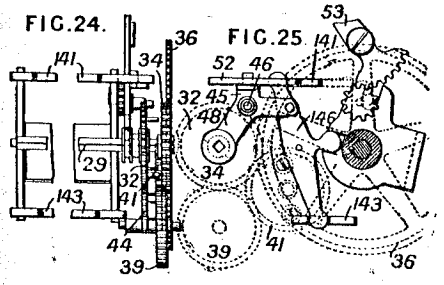

FIG.25.

Adding-apparatus. — A single-bank key-set motor-driven adding-machine, formed as a computing-attachment to a typewriter, of which the denomination-selecting and column-spacing mechanisms are described in Specification 30,426/09, the differential actuating-mechanism in Specification 28,362/10, and the spring-motor driving-mechanism in Specification 28,363/10, is provided with reversing-mechanism

FIG.51.

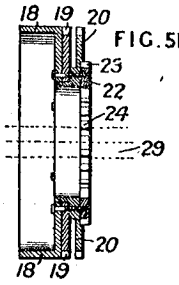

whereby addition or subtraction may be performed at will, and with two transfer mechanisms between each pair of numeral wheels, of which one only is operative at a time according to the position of the reversing-handle.

FIG.49.

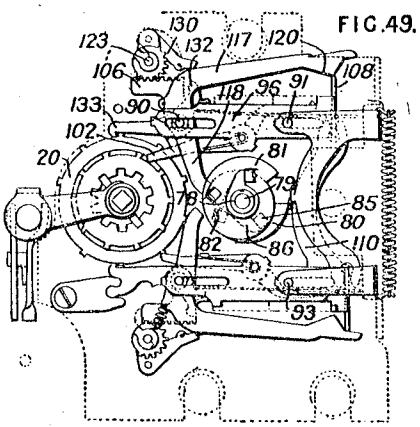

FIG.34.

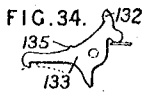

FIG.42.

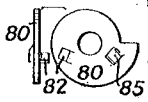

FIG.43.

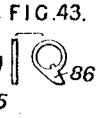

Numeral-bearing elements. — The wheels 18, Fig. 51, of the counter are journaled so as to rotate loosely upon a squared shaft 29, which is also the main actuating-shaft, and consist of a flanged part 18 bearing the numerals, a transfer-actuating gear-wheel 19, a toothed-wheel 20 for engagement with locking-pawls, and an annular wheel 22, which has external teeth 23 for receiving the transfers and internal teeth 24 whereby the numeral wheel as a whole may be clutched to the actuating-shaft. The operation of clutching any numeral wheel to the shaft disengages the corresponding locking-lever.

Adding and subtracting. — The actuating-shaft 29 is driven from the spring-motor and its associated differential mechanism through alternative trains of gearing controlled by the reversing-lever. At one end of the shaft is provided a sliding gear-wheel 32, Fig. 24, with pins upon its face for engagement with holes in a broad wheel 34 driven by the motor through a wheel 36. The wheel 34 also engages with a wheel 39 upon an independent shaft, and this wheel in turn meshes with a wheel 41 which is fast to a wheel 44 by means of a sleeve and rotates upon a stub-shaft. When the sliding wheel 32 is positioned by the reversing-lever to the right, it is driven directly from the wheel 34 by the engagement of the pins and holes upon the adjacent faces, and in this position the sliding wheel is opposite the space between the gear-wheels 41, 44. Upon sliding the wheel 32 to the left, the drive proceeds from the wheel 34 by the wheels 39, 41 to the wheel 44, with which the sliding wheel is in engagement; the direction of the actuating-shaft is thus reversed.

The reversing-lever effects the longitudinal

Howgrave-Graham R P 17309/1915 Trig calc

17,309. Graham, R. P. Howgrave-.
Dec. 9. *No Patent granted* (*Sealing fee not paid*).

FIG.1.

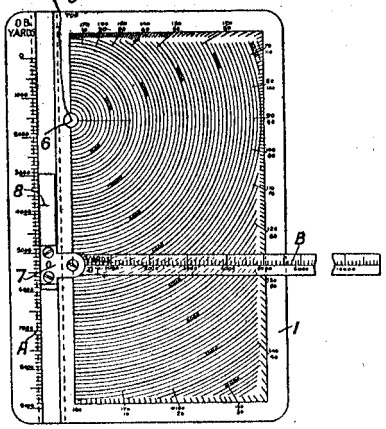

Plane trigonometry calculators.—A protractor plate 1 is provided with circumferential ruling and also with angular graduations along the edge; a transparent scale B is pivoted to a slide 7, which is movable along a scale A and can be moved for angular setting of the scale B with the pivot above the zero-point 6 of the protractor; the index-point 8 of the slide 7 then corresponds with the zero of the scale A. The third side of the triangle is given by stretching a thread 9 fastened at the centre of the protractor. In a modified construction, the protractor plate 7 is movable and the slide 7 fixed, and a second protractor may be provided with its centre coincident with the zero of the scale B.

Hudson E & Bedell B H 23872/1910 Tabular calculator

23,872. Hudson, E., and **Bedell, B. H.** Oct. 14.

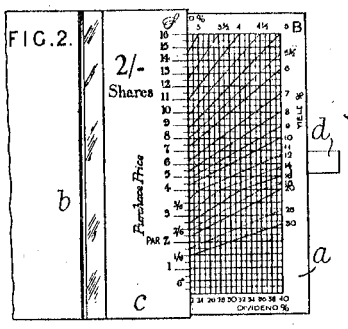

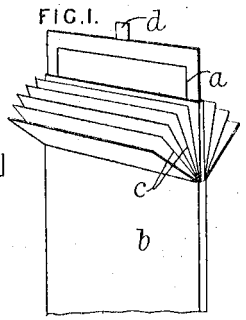

Tabular calculators. — The arrangement shown, consisting of a chart *a* and a container *b* therefor, combined with a book or series of loose leaves *c*, enables the percentage yield of shares to be readily ascertained, their nominal value, purchase price, and dividend being known. The book *c* is turned to the page showing the nominal value of the shares and the chart *a* is drawn out until the figure denoting the dividend just appears on the lower line, Fig. 2. The percentage yield is then shown by the oblique line that starts from the figure denoting the purchase price on the sheet *c*. A draw-tab *d* is provided on the chart, and a stop to prevent it from being completely withdrawn.

Hudson J F 18341/1914 Plane trig, analogue, navigation

18,341. Hudson, J. F. Aug. 7.

Plane-trigonometry calculators.—Relates to instruments for reproducing and solving triangles, comprising a scale G^2, a divided semi-circle A having its centre on the zero line of the scale, and two clampable graduated arms D, E pivoted respectively on the centre of the semi-circle and on a carriage G which travels in a slot H and has a pointer G^1 reading on the scale G^2, and consists in securing a segmental member O to the centre of the arm D beneath the protractor, and in providing a screw J clear of the protractor which may press on the member O and clamp it against a small plate N beneath it. The arm D is made without upward projections, and the arm E is in a plane immediately above it. The carriage G may move stiffly in the slot or may be clamped by a butterfly-headed screw G^3. The semi-circle may be replaced by a compass. The instrument may be used on a moving ship for determining the distance of a distant object, the slot H being conveniently placed in the fore-and-aft line of the ship, and for solving other trigonometrical problems.

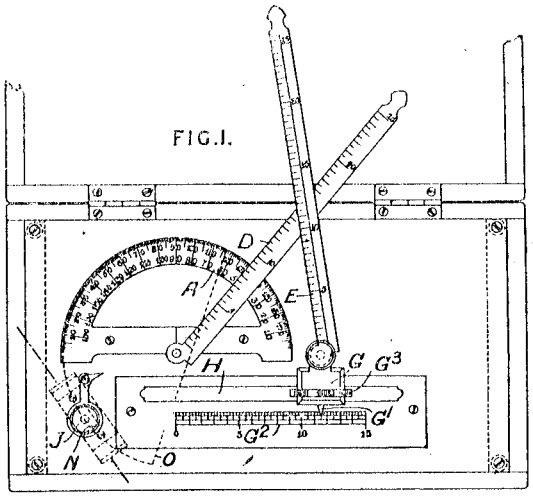

Huettel A G 24307/1903 Pocket cash register

24,307. Huettel, A. G. Nov. 12, A.D. 1902; [*date applied for under Patents Act, A.D. 1901*].

Receipts, recording; calculating - apparatus. — A pocket cash register, or register for numbers, scores in games, and the like, applicable also as an abacus, has a case formed of two integral parts hinged together on a wire, and contains the spherical counters 10 separately mounted on the wire rods 9, and adapted to be moved into one or other of the various cavities 8 formed to receive the counters. Coin designations or other required markings are impressed upon each upper inner flap 6.

FIG. 1.

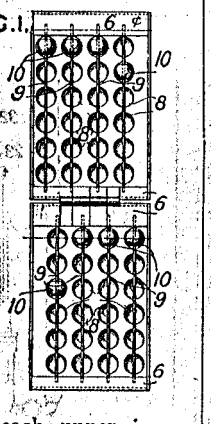

Huizer S L 13492/1892 Adder

13,492. Lake, H. H., [*Huizer, S. L.*]. July 23.

Calculating-apparatus.—Relates to adding-machines. On a spindle C are pivoted 9 levers D numbered 1–9. From these levers project studs H which engage in grooves in a horizontal plate connecting a pair of toothed sectors, one of which is seen at L. Each sector gears with a wheel Z which rotates the spindle O through ratchet gearing. The studs H are so placed on the levers that the movement of the sector L, caused by depressing one of the levers, is proportional to the number of the said lever. Thus, on depressing lever No. 4, the shaft O rotates through an angle four times as great as when No. 1 is depressed, and so on. On the spindle O are a number of bevel-wheels V which can be put in gear each with a wheel *d* on a vertical spindle *c*, which has feathers engaging, respectively, in a groove in a conical numbered drum *q* and in a sleeve *g*. In adding a series of numbers the operation is as follows:—The spindle *c*, Fig. 2, is depressed so that its wheel *d* gears with the corresponding wheel V. The levers D corresponding to the numerals in the digits column are then successively depressed. The spindle *c* is thus rotated, and on the completion of each revolution the spindle to the left is rotated through one-tenth of a revolution by a wheel *e*, having one tooth gearing with a wheel *f* with ten teeth. The tens spindle is then depressed and the levers corresponding to the figures in the tens column operated as before. The wheel *f* is taken out of gear with the wheel *e* on the units spindle, so that the latter is not affected by the rotation of the tens spindle. The operations are repeated for each column of figures, and the result is shown on the drums *q* through slots *u* in the casing *t*.

(*For Drawings see next page.*)

Hulls J & Bradford W 686/1753Counterfeit Coin-Detector and Sliding Rule. Chrono

HULLS.
BRADFORD.
12th Dec. 1753.

686. A grant unto JONATHAN HULLS, of Broad Campden, in the county of Gloucester, yeoman, & WILLIAM BRADFORD, of Chipping Campden, in the said county, schoolmaster, of their new invented machine for preventing frauds by counterfeiting gold, which gives the weight & alloy of that metal in coin, rings, & all utensils made of gold; and likewise have invented a new sliding rule, whereby the contents of all solids and superficials are found out than by the comon sliding rule; to hold to them, their execrs, admrs, & assigns within England, Wales, & town of Berwick-upon-Tweed, and his Mãtie's plantacons abroad, for 14 years according to the statute; with a clause to inroll within 3 kalendar months from the date hereof. Witness His Mãtie at Westmr, the 12th day of Decr, in the year above. By writ, &c.

Hultman & Johanson 3745/1902 Adder

3745. Mackenzie, J. W., [*Hultman, I.*, and *Johanson, A. M.*]. Feb. 13.

FIG.2.

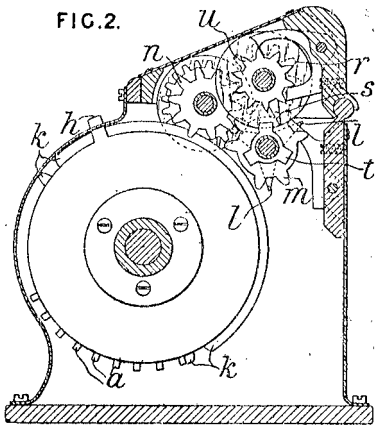

Calculating-apparatus.—The apparatus, as constructed for addition and subtraction, consists of repetitions on the same parallel shafts of the gearing shown, namely, a driving-wheel with nine hinged teeth *a* and key *h* for erecting one to all, an intermediate pinion *n*, an adding-wheel *r*, and carrying gear between an arm *s* on the units wheel and a pinion *u* on the tens wheel. The last element consists of two three-rayed stars *t*, *l*, respectively in the planes of the arm *s* and the pinion aforementioned and of an intermediate disc *m* having three pairs of teeth in gear with two pairs of teeth *k* on the driving-wheel. It is thus turned one-sixth of a revolution by the arm *s* after half a revolution of the driving-wheel has unlocked it, and is turned one-sixth more during the remaining half-revolution of the driving-wheel. To permit of the operations of multiplication and division, a greater number of adding and carrying wheels are provided than of driving-wheels, and the former are mounted in a sliding carriage, so that they can be shifted for each place of figures, and additional counting-wheels are provided on the intermediate shaft, to show the number of forward or backward turns of the driving-wheels.

Human E 18237/1892 Sheets for plotting

18,237. Human, E. Oct. 12.

FIG. 1

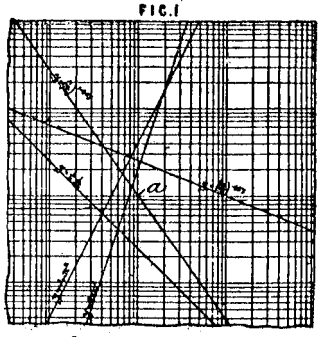

Calculating-apparatus. — Relates to plotting-paper for mathematical purposes. Sheets are ruled

196

with rectangular co-ordinates, the distance of each co-ordinate from the origin a being proportional to the logarithm of the number of that co-ordinate. Thus the tenth co-ordinate would be at unit distance, the hundredth at twice that distance from the origin, and so on. Curves of the general equation $y = ax^n$ plotted on these sheets appear as straight lines, and, plotting off the abscissæ and ordinates on sheets ruled with ordinary co-ordinates, the curves are easily obtained.

Hunt J 19018/1900 Calendar discs

19,018. Hunt, J. Oct. 24.

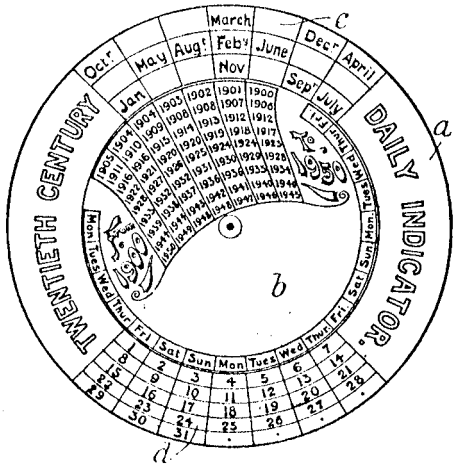

Calendars ; calculating - apparatus. — The date calculator shown in the Figure comprises a large disc *a* and a centrally-pivoted smaller disc *b*. The outer portion of the large disc is divided into four parts, of which the uppermost *c* is subdivided into seven columns marked with the names of the months, and the lowermost *d* is marked with the dates of the months arranged consecutively in seven columns. The larger part of the periphery of the smaller disc is marked with the days of the week repeated about three times, and a smaller part of the periphery is marked with the numbers of the years arranged consecutively in seven columns, each leap year being counted twice. To find the days of the month of August, 1902, the column in which 1902 occurs is brought under the column in which August occurs, and the lower part of the calendar shows that the month commenced on a Friday.

Hunter & Edge 6064/1909 Slide rule for weights

6064. Hunter, J. C., and **Edge, D. R.**
March 13.

Slide-rules for calculating the weights of bars, plates, tubes, &c. from their dimensions are provided with a special form of cursor graduated for materials having different specific gravities. Fig. 1 shows the ordinary weight-calculating slide rule and mounted thereon the cursor, which consists of a frame *a* having two projections *c*, *d*, and containing a piece of transparent material *b* on which are marked two series of lines representing the relative weights of the several materials. One series is used for calculating the weight of plates and square or flat bars, both series for round bars, and both series, together with the projections *c*, *d*, for tubes of circular section, boiler shell plates, &c. The scales A, D on the base *x* are marked in inches for width and in feet for length respectively and the scales B, C on the slide *y* are marked in inches for thickness and in lbs. and cwts. for weight respectively. The scales B, C, D read from left to right. The Specification sets out examples of the use of the slide rule.

(*For Figure see next page.*)

FIG. 1.

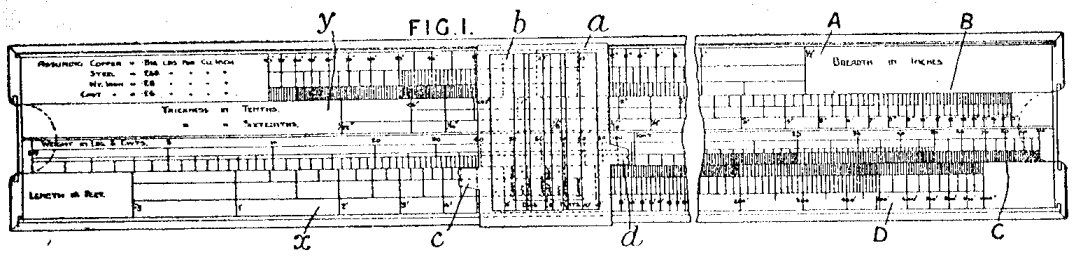

Hurter F & Driffield V C 5545/1888 Slide rule photo exposure

5545. Hurter, F., and **Driffield, V. C.**
April 14. *Drawings to Specification.*

Slide-rules for calculating photographic exposures. The instrument consists of a slide-rule, two scales of which are fixed, and the other two movable. The fixed scales are subdivided with divisions corresponding to the logarithms of numbers which indicate according to suitable units, the one the intensity of light for the given latitude, time of the year, and time of the day, and the other the "inertia" or inverse of the sensitiveness of the given plate. The movable scales are subdivided with divisions corresponding to logarithms of numbers which indicate according to suitable units, the one the speed of the lens, and the other the length of the exposure. The length of exposure will thus be equal to the intensity of the light multiplied by the speed of the lens and divided by the "inertia" of the plate. This can be shown by the ordinary manipulations of the slide-rule.

Huskisson A R 22029/1904 Ruler and slide rule

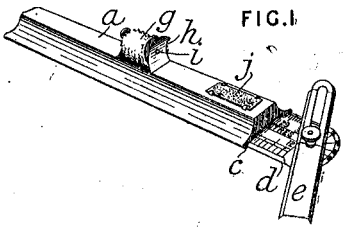

FIG.1

22,029. Huskisson, A. R. Oct. 13.

Slide rules.—A sliding rule *d* forming part of a shaped metal ruler may be graduated to act in connection with graduations on the body as a slide rule.

Illgen P 3744/1888 Adder

3744. Illgen, P. March 10.

Calculating - apparatus. — Relates to adding-machines. Adjacent to a circular scale D with, say, 100 divisions, is a sliding ring B or wheel having an equal number of teeth or frets *a*, one of which *m* projects so as to form a pointer. This pointer is moved from zero to the first of the numbers to be added, the tooth then opposite zero is next moved to the next number, and so on for

979

all the numbers. At each revolution of the ring B the pointer strikes the lever *d* of a counter E, and so records the hundreds. In a modified form, the numbered ring or wheel is moved indirectly by an

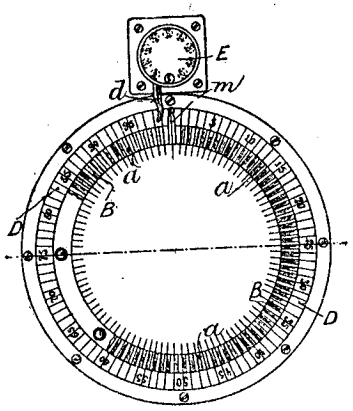

endless band working alongside a fixed scale, and with a tooth corresponding to each number thereon. The ends of the teeth project and gear with spur teeth on the numbered ring.

Illgen P C & Kursten P E 18846/1888 Checking counters

18,846. Illgen, P. C., and **Kürsten, P. E.** Dec. 24.

Counting-apparatus; speed indicators; calculating-apparatus. — Relates to means for checking the counters of speed indicators, gas and water meters, calculating machines, &c. A supplementary disc O is driven by a striker B on the actuating-spindle A, or from the unit disc E. It is divided into, say, nine divisions, numbered from 0 to 8. In order to test the accuracy of the counter, the number

records is divided
y the number of
he divisions of the
upplementary disc,
vhen the remainder
hould be the same
is the exposed digit
of the latter.

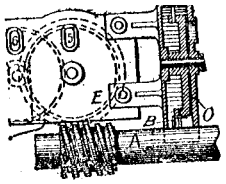

Ingham J & Hinchcliffe G 200/1860 Slide rule for weights of warps

200. Ingham, J., and **Hinchliffe, G.**
Jan. 26.

Slide-rules. — A slide-rule, specially adapted for calculating the weights of different kinds of warps, consists of six concentric scales A, B, C, D, E, F, mounted on a central pivot on a board which is provided with a hanging loop M, and with a spring catch for holding the scales in any desired position. The scales B, C are movable and the others fixed. The scales A, B are identical, each having four series of divisions 1, 2, 3, 4, for setting off thousands, hundreds, tens, and units, or the like. The scale C is a special one, and is shown as marked when a cotton warp is to be calculated. If it is desired to calculate worsted and wool warps, this slide is removed and other special slides are inserted. The scale D has two series of divisions, the inner one for pounds and the outer for ounces. The scale E, also having two sets of divisions, is used for warps from 10 to 100 pounds in weight, while the scale F, having only one line, is for warps under one pound in weight. The number of threads is set on the scale A, the length on the scale B, and the number of single counts on the scale C. The weight is then indicated on the scale D, E, or F. The scales may be placed side by side instead of concentrically, or may be arranged on a cylindrical surface, or as straight scales. The sliding scales move in undercut grooves.

(*For Figure see next page.*)

1

200.

FIG. I.

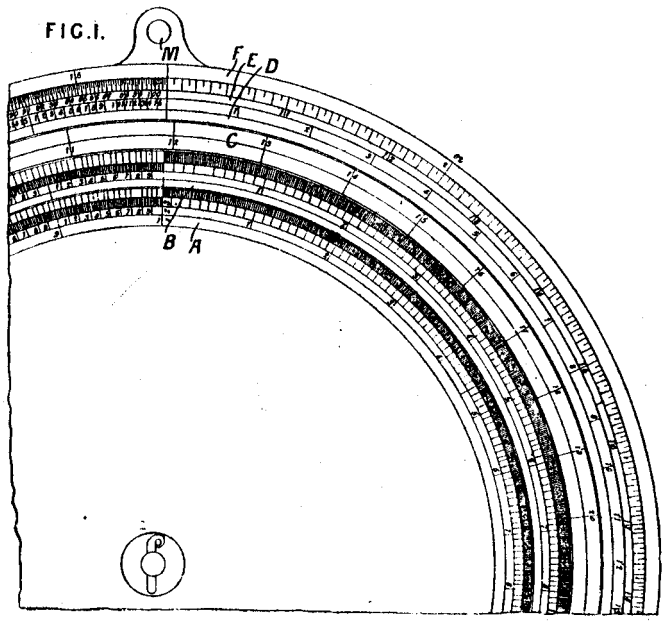

Inglis H R G 1533/1912 Multi slide rule

1533. Inglis, H. R. G. Jan. 19.

Slide-rules comprise a base A^2, two movable slides A, A^1, and an indicator C attached to one slide and extending transversely so as to co-operate with the graduations on the other slide. The usual graduations are in some cases replaced by special marks or signs; these are shown in Fig. 3.

(*For Figures see next column.*)

3

1533.

FIG. 1.

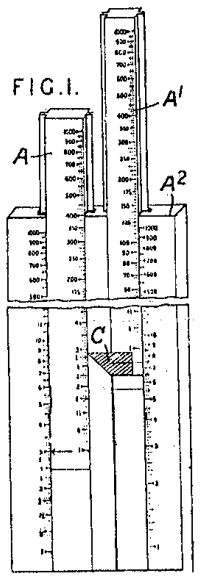

FIG. 3.

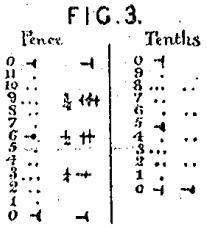

Ionides A G 9446/1911 Circ slide rule for engines

9446. Ionides, A. G. April 18.

Slide rules. — A circular rule for use in connexion with calculations concerning internal-combustion engines and motor-vehicles comprises primarily three scales A, B, C. Scale A, denoting volumes swept out by the piston, and scale C, showing gradients, are provided on the base of the instrument, while scale B, showing ton-miles per gallon of fuel, is arranged on a pivoted sector. Three fiducial marks 8, 9, 10 are provided, and by suitable manipulation of the sector, the ideal and actual ton-mileage and gradients can be ascertained, given the volume figure on scale A. In order that this figure, if not given or known, may be determined, a number of other scales as shown are provided, both on the base of the instrument and also on a disk and sectors. These scales denote such quantities as car mileage per gallon of fuel, R.A.C. and brake horse-power, cycle and car taxes payable, number and diameter of cylinders, length of stroke, gear ratio, road-wheel diameter, weight of car, speed of vehicle, &c.

FIG.2.

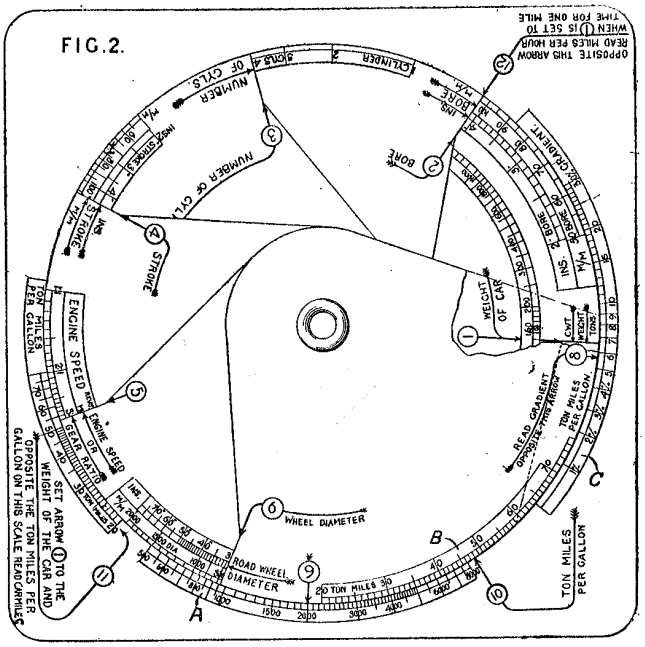

Jackson Bros 109107 of 1916 Cardboard slide rule

109,107. Jackson, T., Bentley, P., and **Jackson Bros.** Sept. 6, 1916.

FIG.1.

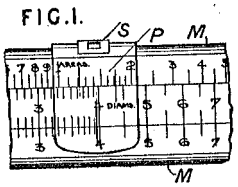

FIG.2.



Slide-rules.—The body of a slide-rule is constructed of thin cardboard A or similar material padded with packing K and reinforced with metal M along the edges. The slide is also constructed of the material A wrapped round a strip of metal N. A celluloid cursor P is held in position by a spring clip S.

Jackson T 129533 of 1918 Slide rule construction

129,533. Jackson, T. Oct. 7, 1918.

Slide-rules.—Friction between the slide and the body in slide-rules having a back *a* formed of celluloid or other thin material is produced by curved blade springs *b* which are pressed flat on to the ends of the rule and secured in position by pins or screws, the tension in the springs tending to bend the back and force the body on to the slide.

FIG. 3.

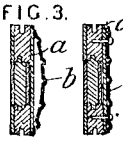

FIG. 4.

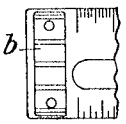

Jackson T 129600 of 1919 Slide rule of sheet metal

129,600. Jackson, T. March 14, 1919.

Slide-rules.—The body of a slide-rule is formed of thin sheet metal bent as shown in Fig. 4 and the slide, which is constructed of the same or similar metal, folded as shown, bears along its edges against the body and can be easily adjusted. The faces of the body are inclined so that the scale edges A—A lightly touch the slide.

FIG. 4.

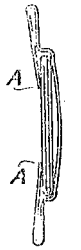

Note by Ron Manley
This rule was cheaply made but has survived for around 80 years.
1. The slide is a most unusual one, being all metal (tin plate) with painted scales.
2. The cursor consists of a folded strip of plastic held in place by a metal clip.
3. The patent was issued in 1919, so the rule was probably made during the 1920s.
4. The rule has sin, tan and log scale on the reverse face. There is a small mark on the reverse stock for the log scale.
5. The rule is provided with two slides. The second one including scales for electrical calculations.
6. The only gauge mark is 1146 (Gunner's mark) suggesting an artillery use.
7. A copy of the original Patent Specification can be found here. (Thanks to Peter Hopp for obtaining the Patent and providing me with a copy.)
8. A copy of instructions in a contemporary book (Slide Rules and How to Use Them by Thos. Jackson) can be found here. (Thanks to Jim Bready for providing the scans of the spare slides and instructions

Jacolin P 8883/1900 Measure and slide rule

8883. Jacolin, P. May 14.

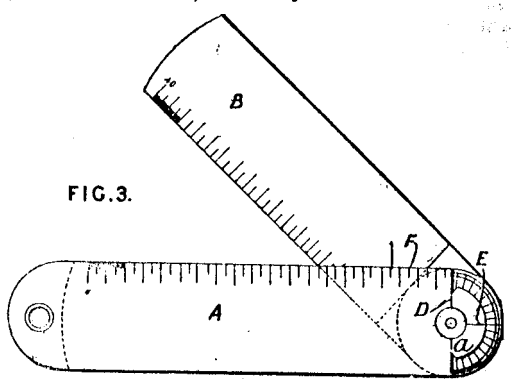

FIG.3.

Measures of length ; slide-rules.—The instrument is for drawing and measuring angles. A double blade A has pivoted at one end a blade B, which can be folded within it. The blade B is marked with a protractor *a* and tangent line F. The blades are graduated, and reading marks D, E are made on the end of the blade A, which is cut away to expose the protractor. The instrument may be combined with a slide-rule.

Jahn A 12613/1911 Thomas type

12,613. Jahn, A. *July 7, 1910.*

Multiplying - apparatus. — In machines of the Thomas type, such as are described in Specification 16,236 / 10, provision is made for adjusting the number of rotations of the main operating-shaft to be effected by a single operation of a driving-handle, or alternatively for operating by means of a motor, under the control of a keyboard. A sliding rack 39 is manually adjusted into one of nine

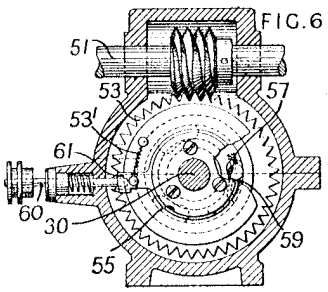

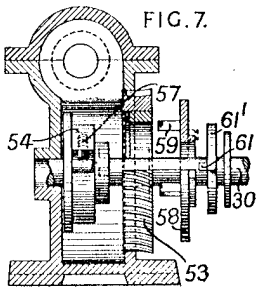

238

Jahnz E 19954/1909 Continued multiplication

19,954. Jahnz, E. Aug. 31, 1908, [*Convention date*].

Multiplying-apparatus.—In apparatus of the pin-wheel and cam-disk type for calculating products of the form $a \times b \times c \times d$, provision is made for automatically transferring the figures of the first product from the results row into the setting-mechanism ready for multiplication by the next factor, and so on. In one form of apparatus, the cam-disks *b* are provided with teeth *s* which can gear with an intermediate wheel *e*, in mesh with wheels on the numeral disks *d*, when the slide *f*

FIG. 1.

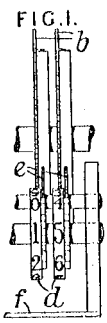

FIG. 2.

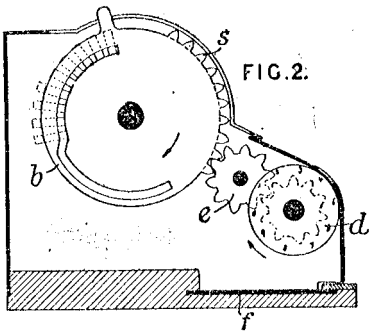

is moved to the left, so that, when the disks *d* are zeroized, the disks *b* are rotated to receive the numbers from the disks *d*. Other modifications of the arrangement are described comprising (1) a rack-bar adapted to be moved into gear with the numeral-wheels and setting-disks, (2) a sliding bar and rack, (3) a slide attached to a cord passing over rollers, and (4) a sliding bar with an arrangement of keys.

See[7] Erwin \Jahnz designed the MADAS mzchine. It was manufactured by H W Egli. AG, Zurich.

Jayet J 11928/1847 Calculating machine Full

A.D. 1847 . . . . . N° 11,928.

Calculating Machines.

JAYET'S SPECIFICATION.

TO ALL TO WHOM THESE PRESENTS SHALL COME, I, JEAN JAYET, of the City of Paris, in the Republic of France, Gentleman, send greeting.

WHEREAS Her present most Excellent Majesty Queen Victoria, by Her Royal Letters Patent under the Great Seal of the United Kingdom of Great Britain and Ireland, bearing date at Westminster, the Twenty-eighth day of October, One thousand eight hundred and forty-seven, in the eleventh year of Her reign, did, for Herself, Her heirs and successors, give and grant unto me, the said Jean Jayet, my executors, administrators, and assigns, Her especial licence, full power, sole privilege and authority, that I, the said Jean Jayet, my executors, administrators, and assigns, or such others as I, the said Jean Jayet, my executors, administrators, or assigns, should at any time agree with, and no others, from time to time and at all times during the term of years therein expressed, should and lawfully might make, use, exercise, and vend, within England, Wales, and the Town of Berwick-upon-Tweed, my Invention of "CERTAIN IMPROVEMENTS IN CALCULATING MACHINES;" in which said Letters Patent is contained a proviso that I, the said Jean Jayet, shall cause a particular description of the nature of my said Invention, and in what manner the same is to be performed, by an instrument in writing under my hand and seal, to be inrolled in Her said Majesty's High Court of Chancery within six calendar months next and immediately after the date of the said in part recited Letters Patent, as in and by the same, reference being thereunto had, will more fully and at large appear.

NOW KNOW YE, that in compliance with the said proviso, I, the said Jean Jayet, hereby declare that the nature of the said Invention, and in what

manner the same is to be performed, are fully described in and by the present Specification thereof, reference being had to the Drawings hereunto annexed, that is to say:—

Figure 1, Sheet I., is a plan on a working scale of a calculating machine constructed according to my Invention. A rectangular plate, about eleven inches long and six inches broad, supports at its corners four strong iron standards, which are bound together at top by two flat iron bars A, B, A^1, B^1, to which are screwed the bridges or cross pieces C, D, E, F, G, H, I, K, L, M, N, O, P, Q, R, S, and T, X. Figure 4, Sheet II., is a longitudinal elevation of one of these cross pieces, each of which, with the exception of the last, T, X, is furnished with two bearings, A and B, for the support of the axles of the toothed cylinders I, I^1, II, II^1, III, III^1, IV, IV^1, V. V^1, as well also as for the two end cylinders T and U, which are not toothed, and which I call governing or check cylinders ("brideurs genereaux), on account of their being used to check or hold stationary the stops 1^1, 2^1, 3^1, 4^1, &c., on which they act. These toothed cylinders are all of the same diameter, and arranged in two parallel series, each series being composed of five cylinders exclusive of its governing or check cylinder, and the axles of all the cylinders of each series are on the same right line as if they were a prolongation of one another. The circumference of each of the cylinders, though calculated for forty-four teeth or for any other number that might be desired, is only furnished with seventeen teeth, which are in pairs of equal length (as seen in the first pair of cylinders 1, 1^1), and the pairs increase gradually and in equal proportion in length from the two "nine teeth" or eighth pair, which are the shortest, to the "first," which is the longest. I say the "first," and not the two "first," because in fact it has no consecutive tooth of a corresponding length. A rebate is formed on either side of each tooth, and projects a little way beyond it. That part of the cylinder on which there are no teeth retains its plain periphery to beyond the two outer teeth for the space marked A, B, A, C, Figure 1, Sheet II. The intervening portion of the circumference of the cylinder from C to B is cut down throughout its entire length, as shewn in the Drawings. The cylinders II, II^1, III, III^1, IV, IV^1, V, V^1, represented at rest, and shewing the sunken portion, do not allow any of the teeth which are placed upon the opposite side to be seen. Although what I have just described is applicable to all the cylinders without exception, it is necessary to state that toothed wheels A^1, A^{II}, A^{III}, Figure 1, Sheet II., are keyed on to the axles of the right-hand series between each of the toothed cylinders I^1, II^1, III^1, IV^1, V^1, and work into pinions c^1, c^1, c^1, c^1, c^1, having six teeth each, and keyed

on to the horizontal axle V^{I}, V^{II}, Figure 1, Sheet I., which is placed longitudinally between the two series of toothed cylinders. Each of the toothed wheels A^{I}, A^{II}, A^{III}, although calculated to carry forty-four teeth, is furnished, however, only with thirty-eight, as shewn at Figure 2, Sheet 2, the part A, B, being stripped, and taking the place of six teeth. The motion which these pinions c^{I}, c^{I}, c^{I}, c^{I}, c^{I}, receive from the toothed wheels A^{I}, A^{II}, A^{III}, &c., is communicated to the check cylinders by the intervention of the pinion X^{I}, which is keyed on the longitudinal axle V^{I}, V^{II}, and gears simultaneously into toothed wheels fixed on the axles of the check cylinders T, U, which are thus caused to make one revolution for every revolution of the toothed cylinder, that is to say, of the toothed wheel A^{I}, A^{II}, A^{III}.

D^{I}, Figures 2 and 7, Sheet 2, is a steel stop of about the same size as the pinion c^{I}, against which it is fixed, and has three cavities on its circumference, which coincide exactly with and act upon the plates O, O^{I}, which are fixed upon the wheel A^{I}, A^{II}, A^{III}, at the commencement and termination of the range of teeth. A groove, D, E, F, Figure 1, Sheet 2, is cut in the front end of each of the toothed cylinders of the right-hand series, and ends in two bevilled terminations D and F, the space between which corresponds to that left between the two plates O, O^{I}, Figure 2, Sheet 2. The elbow piece of arm L^{I}, L^{II}, which is made fast to a rod F^{I}, I^{I}, takes into this groove. The rod F^{I}, I^{I}, is supported by suitable bearings, one only of which, M^{I}, is shewn in the Drawing. This rod, which I call "cliquet general" (common catch), because it is common to all the cylinders of the right-hand series, carries at its furthest extremity, which projects beyond the cross piece M^{I}, an arm G^{I}, I^{I}, differing in length and form from the five others L^{I}, L^{II}, &c. The arm G^{I}, I^{I}, causes the piece S^{I} to catch in the slots of the circular plate N^{I}, P^{I}, which is made fast at right angles to the end of the central horizontal rod V^{I}, V^{II}, and thereby arrests its further rotation.

Figure 2, Sheet 1, represents a calculating machine constructed upon a smaller scale, that is to say, its numerical operations are limited to calculations which do not extend to beyond six places of figures. The only difference between the two machines is, that in the smallest one the cylinder is caused to do the duty of two, for it may be considered as the first or larger machine deprived of its left-hand portion, namely, the cylinders I, II, III, IV, V, and the apparatuses and check cylinder T, which are dependent thereon. The differences which appear in the Drawings are, therefore, mere modifications of parts which may be exchanged and applied to either machine.

I shall proceed to describe the mode of working this machine, in order that the action of the several parts thereof before referred to may be the better

understood. Suppose the toothed cylinder I^{I} of the right-hand series (shewn in the Drawings as in motion) to be at rest, like the others, the pinion C^{I} being opposite the vacant space, that is to say, the portion without teeth of the wheel A^{I}, A^{II}, A^{III}, the arm L^{I}, L^{II}, would then take into the space between the two bevilled terminations D, F, of the groove D, E, F, Figure 1, Sheet 2, while the arm G^{I}, I^{I}, would hold firmly the circular plate N^{I}, P^{I}. All being thus arranged, if either of the toothed cylinders be now made to rotate, the nearest, I^{I}, for instance, the elbow piece of the arm L^{I}, L^{II}, entering into the bevilled terminations of the groove D, E, F, will be thereby lifted up, and will communicate its ascending movement to the arm G^{I}, I^{I}, which will consequently liberate the catch S^{I}, from the slot in the circular plate N^{I}, P^{I}, and allow the central and horizontal axle V^{I}, V^{II}, to revolve, such rotary motion being communicated from the cylinder I^{I} by means of the toothed wheel A^{I}, A^{II}, A^{III}, and pinion C^{I}. This movement is continued until the cylinder I^{I} (about to finish one revolution) brings the vacant space of its wheel A^{I}, A^{II}, A^{III}, opposite to the pinion C^{I}, and presents at the same time to the elbow piece of the arm L^{I}, L^{II}, the bevil of the groove, which will consequently cause the arm G^{I}, I^{I}, to force the catch S^{I} into the slot of the circular plate N^{I}, P^{I}, and to arrest its further movement, and at the same time that of the two check cylinders, until a fresh revolution of this or any other cylinder, for the motion of each cylinder is so far independant of that of the others as to render their simultaneous rotation impossible. It will be seen that the object of the plates O, O^{I}, on which the stop D^{I} acts, is to ensure the regearing of the pinion C^{I} into the wheel A^{I}, A^{II}, A^{III}, as well as the entry of the catch S^{I} into the slots of the circular plate N^{I}, P^{I}. The steel axles marked 1, 2, 3, 4, 5, 6, 7, 8, 9, 10, are arranged at equal distances on two circumferences described with the same radius, and having for their respective centres the points A and B, Figure 4, Sheet 2, which are the centres of the cylinders, so that the cylinders and circumferences are concentric. These axles extend the whole length of the machine, and are supported (in order to prevent their giving) in bearings drilled in bridges or curved cross pieces made of copper D, C, G, H, I, K, L, M, &c., Figures 4 and 17, Sheet 2, which are supported upon the iron cross pieces designated by the same letters in Figure 1, Sheet 1. Each of these axles carries five pinions (bearing exact resemblance to the pinion C^{I}, Figure 1, Sheet 2), which are furnished with six teeth intended to gear into the teeth of the cylinders. The axles are semi-circular in form (one of which is shewn in section Figure 13, Sheet 2), in order to prevent the pinions turning independently of them, but without interfering in the slightest with the longitudinal movement, which should be

© B O B Williams Printed22/11/2023 CalcPatents Ed. 1.doc

as free as possible, so as to allow them to gear into any couple of teeth from 0 to 9. These pinions are so adjusted as to touch that portion of the periphery of the cylinder which is without cogs (but which is not cut away), and by the consequent friction be prevented from turning. The rebates between the cogs shewn upon the cylinder 1^{I}, Figure 1, Sheet 1, allow the free gearing of the teeth of the pinions into the teeth of the cylinders. Besides these five pinions, each of the axles has a catch 1^{I}, 2^{I}, 3^{I}, 4^{I}, 5^{I}, &c., Figure 1, Sheet 1, and shewn separately in Figure 7, Sheet 2, which serves to hold the axle on which it is fixed whilst it is not held by the cylinder, that is to say, during the passage of the cut-away portion of the cylinder before it. To effect this the check cylinders T, U, on which these catches act, have indentations on their peripheries, the lengths of which act in proportion to the cut-away portions of the toothed cylinders, so that the axles may be always held by the check cylinders when they are not by the toothed cylinders, and vice versa. In order to insure the regearing of the pinions into the toothed cylinders, and of the stops into the check cylinders, I have sloped the cut-away portion, as shewn at C and B, Figure One, Sheet 2, and the indentations on the check cylinders, Figure 1, Sheet 1. It follows that the check cylinders will always hold stationary the axles when the toothed cylinders are in a state of repose, that is, have their cut-away portions opposite to their respective pinions. It will be seen from the preceding observation how the axles may be made to revolve successively by each cylinder, inasmuch as the other cylinders being in this state of repose allow their respective pinions which are carried by the axles to turn freely in the cut-away portions of their peripheries. The axles 1, 2, 3, 4, &c., are each of them supported at one end by the cross piece R, S, and terminate at the other in bearings drilled in the centres of the ends of rods 1^{II}, 1^{III}, 2^{II}, 2^{III}, &c., which are fixed to the cross piece T, X, so as to be in the same right line as and the extension of their respective axles. These rods are alternately of equal length, and on each of them is mounted a " canon " (hollow cylinder), intended to carry a stop *a*, *a*, rivetted to it, which is fixed (on the five shortest rods) to that side of the " canon " (hollow cylinder) which is the farthest from the cross piece T, X, and in the five longest rods to that which is the nearest to the said cross piece, in order to prevent any bending of these rods. The stops (one of which is shewn separately shewn in Figure 8, Sheet 2) are composed of two circular plates rivetted together, one of them having nine circular indentations on its circumference, which are equal one to the other, while the other circular plate is divided into the same number of teeth. The five stops which are mounted upon the five shortest of the rods carry each of them a steel pinion C,

Figure 9, Sheet 2, and Figure 1, Sheet 1, one of the pivots of which rests against one of the circular plates, and the other is carried by a bridge or cross piece fixed on the stop *a*, *a*, and partakes of its movement. The position of the five other stops not allowing of their being used for this purpose, I attach to the end of their "canon" (hollow cylinder) a plate *d*, especially intended to carry this pinion C, which should be placed at such a distance from the centre as to gear easily into the pinion *b* (which is of double its own diameter) and into the wheel *e*, *e*, which carries the teeth on the inside of its periphery, and whose diameter is fourfold that of the pinion. The wheel which is carried by the axle 2 is supposed to be cut through, and the upper half removed to allow of the gearing of the pinion C into it being clearly shewn. It will be seen from the arrangement just described that the internally toothed wheel *e*, *e*, whose movement is independent of its axle, may be made to turn by means of the pinion *b*, which is invariably fixed upon the same axle, or by the pinion C, (one of them being stationary,) or by the two together, they being made to rotate in opposite directions. In this last case the internally toothed wheel *e*, *e*, partakes of the two movements, so that its velocity is equal to the sum of the velocities transmitted by the pinions C and *b*, and it communicates its motion to the axles *f*, *f*, by means of gearing wheels *h*, *i*, the smaller *h* being to the larger one *i* in the proportion of six to ten. The wheel *h* is fixed upon the "canon" (hollow cylinder) of the internally toothed wheel *e*, *e*, and the wheel *i* upon the axle *f*, *f*, which carries a little further on the circular plate *g*, *k*, called "bridon," bridling wheel, Figure 8, Sheet 2, Figure 1, Sheet 1, because of its analogy of operation to that of the check cylinders. This bridling wheel is so adjusted that a small portion of its circumference coinciding with the circular indentations of the stop *a*, *a*, the rotary motion of the latter shall be prevented until the tooth *g* catches against the teeth of the circular plate which constitutes a portion of the stop *a*, *a*, & causes one of the points of the circular indentation with which the bridling wheel is in contact to enter into a notch cut for that purpose in the bridling wheel immediately behind the tooth *g*, and consequently to move one tooth onwards, or to make one tenth of its entire revolution to one entire revolution of the bridling wheel. This "pass" or action is communication to the axles *f*, *f*, of the succeeding bridling wheel, which is caused to make one tenth of its revolution by means of suitable gearing *e*, *e*, *c*, *b*. The size of the bridling wheel should be so proportioned to that of the stop, that the transmission of the pass or action before described of any one apparatus to the following should be completely effected during the one tenth of a revolution of the bridling wheel. I desire that it may be understood that if these conditions were

fulfilled this "pass" or action before referred to would be communicated almost as instantaneously from the first apparatus to the tenth as to the second. But as the power is in inverse proportion to the velocity, that is, the size of the bridling wheel, it has been found impossible to transmit this pass or action beyond a certain apparatus, which practise and calculation have proved to be the sixth, so that the addition of an unit to 9, 9, 9, 9, 9, is scarcely possible. To obviate this difficulty, by increasing the power, I break off the communication between the third and fourth apparatus, that is, instead of transmitting this "pass" or action directly by the bridling wheel, as before, I accomplish it by the intervention of the check cylinders T¹, U¹, which are furnished with two teeth each b^1, b^1, placed in suitable positions on the same line of rotation, and gearing into a pinion m, which has four teeth, Figure 10, Sheet 2, and Figure 1, Sheet 1, the teeth of which being diametrically opposed are not upon the same line of rotation as the two others, so that this pinion works as though it had two teeth only, and can never make more than one fourth of a revolution at a time. This motion is communicated to its axle, which is semicircular in form, and transmits it on to the fourth axle by means of the pinion p in the wheel q, which replaces the stop of that axle, and causes it to make one ninth of an entire revolution, which is followed by the "pass" or action before described, and can only take place when the tooth of the pinion m, which is perpendicular to the surface of the check cylinder, comes on the same line, as is afterwards explained. In the case when this condition no longer exists, which invariably follows the "pass" or action before described, it must be renewed; that is to say, to cause again this "pass" or action, the perpendicular tooth must again be moved on the line of passing of the teeth of the check cylinder. This to-and-fro movement is communicated to the perpendicular tooth by means of the excentric r, keyed on the axle r, s, Figure 10¹, Sheet 2, and Figure 1, Sheet 1, which works between the collars t, u, and thereby causes the pinion m to move alternately backwards and forwards, motion being communicated to this excentric by the wheel v, x, and pinion s, which receive motion from the passing of the tooth g of the bridling wheel k, g, in the nine-toothed stop a, a. The four-faced stop y, Figure 10, Sheet 2, is fixed at the end of the axle n, o, and in contact with the check cylinder, to insure the immoveability of this axle. In order to effect this "pass" or action, an opening z is cut in the check cylinder of sufficient size to allow of the stop turning therein, and of the axle partaking of the motion communicated to it. When the "pass" or action should terminate, that is, when the pinion m has neither of its teeth upon the line of passage of those of the check cylinder, the stop y is prevented from taking into this opening by the spring catch a^1, b^1, the head of which takes into a square

notch in the collar u, whence it can be disengaged. But at the instant of the "pass" or action before described taking place, when it takes into a similar notch in the circular plate t, the expanding form of which allows of its being disengaged, and of the turning of the axle, this spring catch will then immediately take into a square notch in the same circular plate t, whence it cannot be disengaged until the recurrence of the "pass" or action before described. It then passes into a similar notch of the opposite collar u, of an expanding form, to allow of the turning of the axle, and to fall again after this movement into a square notch in the same collar. The entry of the catch a^1, b^1, in the square notches of the collars t, u, is caused by projections soldered on to the interior circumference of the check cylinder on each side of the teeth l^1, l^1, which act upon the pin fixed upon the spring catch a^1, b^1, after each recurrence of the pass or action. The transference of the "pass" or action which has just been described to the seventh apparatus is effected in the same manner as the preceding. All the difference between the series of apparatus shewn between the cross pieces C, D, G, H, consists simply in that the motion of the axles 1, 2, 3, &c., instead of being transmitted directly to the apparatuses, as in the first series, is communicated by means of the intermediate wheels c^1, d^1, the first of which, c^1, is fixed upon the axles 1, 2, 3, &c., and the second d^1, which is considerably thicker than the other, upon the axle c^1, which carries the wheel e^1. These intermediate wheels are intended to raise sufficiently high the bridling wheels g^1, k^1, of these apparatuses, to allow their axles f, f, to pass over the bridling wheels of the first apparatus, so that the numbers which they carry at the extremity of the axles may be exhibited on the fore part of the machine. The remaining portions of the machine being exactly similar, even to the passage of the "nines," which is caused by the upper check cylinders T, U, on which for this purpose are placed the teeth l, l, I shall not give a detailed description, but desire it may be remarked, that as their action is in some cases useless, I, in order to give the machine all the freedom of play of which it is capable, suspend their functions by means of an apparatus which I will now proceed to describe.

It will be observed that the wheel c^1, the centre bearing of which is round, Figure 11, Sheet 2, does not partake of the movement of the axles 1, 2, 3, &c., inasmuch as one of the three openings with which it is pierced is held fast by the pin i, Figure 1, Sheet 1, fixed on the circular plate n^1, and adjusted in half moon upon the axles 1, 2, 3, &c., by means of a screw. This wheel c^1 will not cease to follow the movement of the axles 1, 2, 3, &c., inasmuch as when liberated from the action of the pin i it will be held by the pin k^1, fixed upon the cross piece H, G, without however getting out of gear with the

© B O B Williams Printed22/11/2023 CalcPatents Ed. 1.doc

wheel d^1, which is made unusually thick for that purpose. In this last position the working of the machine is stopped, since the axles 1, 2, 3, &c., can move without communicating any motion to the wheel c^1. This engagement in and disengagement from the pins i^1 and k^1 of the wheel c^1 is communicated to all the wheels marked c^1 of this apparatus, by means of a sliding T-piece X, Z^1, furnished with arms q^1, the forked ends of which embraces the hollow cylinder of the wheels c^1. This T-piece is supported by and moves to and fro between two cross pieces R^1, S^1. The to-and-fro motion is sufficientiy great to produce the desired effect, and is communicated by means of the bar T^{II}, U^{II}, which is fixed by the middle, and terminates at one end in a button which projects outside of the machine. At the end of each of the axles f, f, f^1, f^1, which carry the bridling wheels of the two series of apparatuses, is fixed a circular plate 1^{III}, 1^{III}, having marked upon its surface the numerals 0, 1, 2, 3, 4, 5, 6, 7, 8, 9, Figure 12, Sheet 2, which can be exhibited only one at a time through an opening of sufficient size made in the front plate of the machine, Sheet 3. The position of each of the circular plates upon its axle should be such that the action of the catch tooth of the bridling wheel g, k, upon the stop a, a, may take place during the change from 9 to 0 on the numeral plate 1^{IIII}. Longitudinal motion is communicated to the six toothed pinions which are carried by the semicircularly shaped axles 1, 2, 3, &c., by means of the ten ladders L, M, &c., Figure 14, Sheet 2, which are supported in two bridges I, K, P, Q, placed immediately in front of each end pair of cylinders. These bridges, the bases of which rest upon the pieces a^{III}, b^{III}, c^{III}, d^{III}, Figure 1, Sheet 1, are pierced with ten rectangular openings, in which the ladders have a to-and-fro movement which they communicate to the six toothed pinions by means of the forked rods A, B, C, D, E, I, H, G, F, &c., Figure 14, Sheet 2. On each of the first six ladders (counting from left to right) are screwed five of these forked rods, while the seventh ladder carries only four of them, the eighth three, the ninth two, and the tenth one. The first forked rod of any ladder governs the pinion which belongs to the first pair of cylinders, and which is carried by an axle, the numeral order of which is always the same as that of the ladder referred to; and each of the other rods of this same ladder, taken in the order of their succession, guides a pinion carried by an axle, the rank of which advances successively by one, proceeding from right to left, and gears into a pair of cylinders, the rank of which increases also by one in going from the front to the back of the machine, whence it results that the pinions marked 1^2, 1^3, 2^3, 1^4, 2^4, 3^4, 1^5, 2^5, 3^5, 4^5, Figure 1, Sheet 1, will be without guide rods, and that they are fixed upon their axles out of gear, in order to hold them stationary during the time they

are not so held by the check cylinders. I desire it to be remarked, that the guide rods of the same ladder should be fixed at such a distance one from the other that their pinions may all simultaneously gear the same number of teeth, whatever be the pair of cylinders to which they belong. The projecting pieces N, P, R, S, of the ladder, Figure 14, Sheet 2, is divided into ten notches 0, 1, 2, 3, 4, 5, 6, 7, 8, 9, into each of which may be made to take the head of the spring catches *t*, *u*, *v*, *x*, which indicates by the Figure to which it corresponds the number of the pair of teeth that the pinions guided by the rod of this ladder cause to gear into their respective cylinders. The cylinders I, I', II, II', III, III', &c., Figure 1, Sheet 1, (as well as the cylinders I, II, III, &c., Figure 2, Sheet 1,) invariably carry at the extremity of their axles two pinions *y*, *z*, into which gears the wheel J, J', with, however, this difference, that in the machine, Figure 1, each of these wheels guides simultaneously two pinions, while in the one represented, Figure 2, the wheel guides only one. Whatever may be the arrangement, the wheels J, J', are always caused to rotate by another, the axle of which 1, 2, 3, &c., carries the handles, Sheet 3, and a circular plate, as shewn only at Figure 2, fixed to it, and divided into ten equal portions, to correspond exactly with the concentric dial R, T, U, V, Q, P, fixed upon the front plate of the machine, and consequently divided into ten portions 0, 1, 2, 3, 4, 5, 6, 7, 8, 9. The needles D, C, B, A, L, M, fixed upon the handles, and indicated by the same letters, carry each of them a pin which may be made to take into each of the divisions of the corresponding circular plates S, X. Each needle indicates by the number of these divisions it has passed over on the fixed dial the number of revolutions executed by its corresponding cylinder, because the motive gearings are so calculated that the cylinder shall make ten revolutions while its motive axle makes only one. These gearings, however, may be calculated and constructed in other proportions, such as five revolutions of a cylinder to one of its motive axle, as represented, Figure 1, Sheet 1, Figure 1, Sheet 3, being a view of the front plate thereof. In this arrangement the fixed dials T, R, V, U, Q, P, S, E, I, O, instead of being concentric with the motive axle 1, 2, 3, 4, 5, are placed immediately above it, while the handle thereof projects beyond the machine. These axles carry also a circular plate S, X, Figure 20, Sheet 2, on which acts the spring catch F, F. It is divided into five notches, and carries besides five pins which act upon the eighteen-teeth wheel M, L, on which acts the spring stop *y z*. One end of the axles of each of these wheels projects beyond the machine, and carries a needle L, M, A, B, D, C, &c., on which runs over the dials R, T, U, V, Q, P, &c., which are divided also into eighteen portions, and marked 0, 1, 2, 3, 4, 5, 6, 7, 8, 9, 8, 7, 6, 5, 4, 3, 2, 1. This

© B O B Williams Printed22/11/2023 CalcPatents Ed. 1.doc

needle moving from 0 at each fresh operation indicates by the corresponding Figure the number of revolutions executed by its corresponding pair of cylinders either to the right or to the left, according as the portion of the dial passed over is to the right or left of 0. At the termination of each operation the needles are to be brought back to 0 by an arrangement hereafter to be explained.

Addition.—Suppose it is desired to add 258 to 668, I place the ladders in such a position as that they shall indicate the number 668, that is to say, I place the third ladder which represents the hundreds so that the head of its spring catch shall correspond to the notch 6, the second which represents the tens upon the notch marked 6, and the first which represents the units upon the notch marked 8. The other ladders marked 0, that is to say, indicate that the pinions which they guide are out of gear, as shewn at Figure 1, Sheet 1. When these arrangements are completed, I cause the first pair of cylinders to make one entire revolution by means of the motive gearing, and bring the needle of the dial, which represents the units, and corresponds to this pair of cylinders from 0 to 1, the gearing of the apparatuses being calculated in such a manner as that one third of the revolution of the axles 1, 2, 3, &c., shall produce a corresponding number on their dials. It will be easily understood that after the movement I have just effected, the dial of the third apparatus will have passed from 0 to 6, because, after the indication of the third ladder the pinion of its first guide rod is carried by the axle 3, and gears into the sixth couple of teeth of the first pair of cylinders, and consequently causes it to make two revolutions, that is to say, to gear twelve teeth, and therefore to shew number 6. It will be understood after the same manner how the second dial (representing the tens) is brought from 0 to 6; and lastly the first dial, that of the units, from 0 to 8. The other dials having remained stationary show 0 only, so that the same number 668 will be read off through the openings of the two galleries. To add the second number 258, I place as before the ladder so as to represent 258, and then cause the first pair of cylinders to make one entire revolution by means before described, after which the number 926 will be read off through the openings as the sum of the two numbers. The reason of this number appearing instead of 258, is that the dials were not brought back to 0 before beginning the operation. It will be seen that the results which appear in the upper gallery is not of the slightest use in these operations; I therefore consider it advisable to throw the apparatuses out of gear, in order that the machine may work with more facility.

Multiplication.—Supposing it is required to multiply 668 by 258, I first

bring the dials of the two galleries to 0, and then, as in the preceding operation, place the ladder so as to represent 668, after which I cause the first pair of cylinders (representing the units) to make eight revolutions in bringing the needle of its dial from 0 to 8, and there will appear through the gallery 668 added tgether eight times, or multiplied by 8, that is to say, 5,344. To multiply 668 by 50, I remark, that according to the disposition of the guide rods of the ladders, the pinions which belong to the second pair of cylinders should give (seeing the rank occupied by their respective axles, and the number of teeth they gear, Figure 1, Sheet 1,) the same number as the pinions of the first pair of cylinders, but thrown back one rank towards the left, that is, multiplied by 10, since the pinions of the second pair of cylinders taken in the order of their succession are respectively carried by axles whose rank increases by one towards the left, whence it follows that by causing the second pair of cylinder to make five revolutions, and in bringing the needle of the corresponding dial from 0 to 5,668 multiplied by 50, and added to 5,344, or 38,744, will be read off through the galleries. To multiply 668 by 200, I bring as before the needle of the dial representing the hundreds from 0 to 2, and as the pinions belonging to the third pair of cylinders represent the number 668 moved two ranks towards the left, the result will be 668 multiplied by 200, and added to 38,744, and the total product will then appear as 172,344. If the apparatus of the upper gallery are not thrown out of gear, the same number 172,344 will be there expressed, so that before commencing a new multiplication, after having brought back to 0 the dials of the lower gallery by means hereafter to be described, the lower gallery will represent the product of this second multiplication, while the upper will show this product added to the first, whence it follows that by means of this gallery the addition of all the products of any number by another may be obtained when the total does not exceed 10,000,000,000 exclusively, which is the limit of the larger machine.

Subtraction.—Supposing it is required to subtract 258 from 364, I place the ladders so as to represent 364, which I cause to appear through the gallery, in bringing the needle of the dial representing the units from 0 to 1, and then place the ladders so as to represent 258, after which I pass the needle of the same dial from 1 to 0 in a direction the reverse of that used in addition, and 106 will appear as the difference between these two numbers.

Division.—To divide 93,912 by 364, I cause the first number to appear through the gallery by the means before described, and place the ladders so as to represent the divisor 364. In order that the operation may be the more easily understood, we will suppose the quotient 258 to be known. Division

© B O B Williams Printed22/11/2023 CalcPatents Ed. 1.doc

being only a short method of subtraction, the operation to be performed may be said to consist in subtracting from 93,912,200 times 364 plus 50 times 364 plus 8 times 364. To subtract 200,364 or twice 36,400, I bring the needle of the dial representing the hundreds from 0 to 2 in the reverse direction used in multiplication, and the remainder, 21,112, will appear through the gallery. To subtract 50 times 364 or 5 times 3,640, I pass the needle of the dial representing the tens from to 0 to 5 in the reverse direction used in multiplication, and the remainder, 2,912, will then appear, from which I subtract 8 times 364 in bringing the needles of the units from 0 to 8. After this last subtraction, the gallery will not offer to view any more numbers, and I therefore conclude that the division has been exactly completed. The quotient (although known) is indicated by the figures to which the needles of the dials point, representing units, tens, and hundreds. If the division has not been exact, the gallery, instead of showing 0, will shew certain Figures which will represent the remainder. When the quotient is not known the operation becomes long and difficult, firstly, for the determination of the highest units of the quotient, that is, of the dial which represents them, this last being known by the comparison which should necessarily be made between the divisor and the partial dividend while successively passing the needle of this dial from division to division until the gallery shows a partial dividend smaller than the divisor, for it is then only that the figure to which the needle of this dial corresponds represents the real figure of the quotient. The same operation is performed upon the other dials.

Figure 15, Sheet 2, represents a means of surmounting all these difficulties, and consists of a spring catch A, B, which acts upon the pin R, fixed against the circular plate *k*, *g*, which is adjusted firmly upon the axle *f*, *f*, which carries the left-hand dial, Figure 1. Sheet 1, and represents the highest units of the machine. The head of the spring catch A, B, which is cut square on one side and on the other sloping, to admit of its being raised by the pin when the circular plate *k*, *g*, moves in the direction for multiplication, and of its forming a stop when it moves in the reverse direction for division. The position of this pin should be such that the point of stopping should take place when the dial shows 0, so that the passage from 0 to 9 of this dial cannot take place; but in the case when all the dials of the lower gallery show 0, it is evident, seeing the position then occupied by the teeth of the bridling wheels in respect to their stops, that this passing from 0 to 9 will be impossible for any one of all the dials, since that can only take place in conjunction with the last and all the intervening dials, whence it results that

every time the gallery exhibits a partial dividend smaller than the divisor it is impossible to effect a fresh revolution of the operating cylinder, for if it were otherwise the remainder of this last subtraction would be less than 0, that is to say, that the passing from 0 to 9 would be effected, which I have shown above to be impossible. Wherefore the figure of the quotient is the one indicated by the needle of the dial when the operation is stayed by the action of the spring catch A, B, before described. The same operation is performed with the other dials up to the first, that representing units. The operations which I have just described ought to demonstrate sufficiently the necessity after each calculation is effected of bringing back to 0 the dials which exhibit the results through the lower gallery before commencing a fresh one; and it is effected instantaneously by means of the crank levers *a*, *b*, *c*, Figure 1, Sheet 1, and Figure 1, Sheet 2, fixed to the extremities of the axles *f*, *f*, which carry the dials of the lower gallery, and are capable of being always brought back to the same fixed point by means of the pieces a^1, b^1, c^1, Figure 16, Sheet 2, which are of the most convenient form for facilitating this movement. These pieces are attached to a sliding piece M, N, (made to slide between two bridges,) which when drawn out bring all the crank levers to their fixed point, and cause the dials carried thereby to show 0. I desire it may be remarked, however, that these crank levers being fixed to the axles *f*, *f*, which can only move by the ordinary action of the machine, it is necessary, before drawing the sliding piece M, N, in order that they may obey the action of the pieces a^1, b^1, c^1, to liberate them by means of the wheels *i* (shewn in the left-hand portion of the Figure 1, Sheet 1, to avoid confusion), which are capable of having a rotary motion imparted to them independently of their axles, when the pin which each of them carries is no longer held in one of the ten notches cut in the circumference of the circular plates *w*, Figure 18, Sheet II., which are fixed firmly upon the same axles *f*, *f*. This disengagement is effected instantaneously by all the wheels *i*, by means of the arms *n*, Figure 1, Sheet I., the forked extremities of which take into a small circular plate adjoining their hollow cylinder, while the other ends are firmly fixed in the sliding T-piece P^{II}, L^{II}, which is supported by two bridges, one only of which is seen Q^4, R^4, and in which it has a to-and-fro movement sufficient to allow of the gearing in and gearing out of the pins of the wheels *i*, without, however, permitting them to gear out of the wheels *h*, which are made unusually thick for that purpose. This to-and-fro movement is communicated to the sliding T-piece P^{II}, L^{II}, by means of a sliding bar M^{II}, O^{II}, the extremity of which terminates in a button projecting outside of the machine, and acting on the first by means of a hidden axle which carries

at its upper end a pinion gearing into the teeth of the arm R^{II}, while at its lower end it carries a stop with four teeth which the sliding piece M^{II}, O^{II}, causes to make one fourth of a revolution by means of the tooth V^{II}. After the passing of this tooth in this stop the wheels *i* are set at liberty, and the sliding bar M^{II}, O^{II}, is allowed to again follow up its motion, dragging with it the sliding piece M, N, to the end of its course. The sliding bar M^{II}, O^{II}, is then pushed back, and the lower gallery shewing 0, a fresh operation may be commenced. It is evident that the dials of the upper gallery will not have been affected, because their axles 1, 2, 3, &c., from which they receive motion, have remained stationary. It is chiefly in consideration of this peculiar advantage that this mode of bringing back the dials to 0 should be preferred to the following, when the machine is furnished with two series of apparatus. The bringing back to 0 of these last, that is to say, of the dials which represent the addition of the products, taking place but very seldom, it is effected by simple subtraction, that is, by placing on the ladders the number indicated by the dials, and subtracting this number from itself, the rest is necessarily 0. To carry out this operation in the machine, Figure 2, Sheet I., the following difference is observed;—Instead of the freedom given to the axle *f*, *f*, which carry the crank levers, being effected by the gearing out of the wheels *i*, which in this case are soldered to the axles, it is effected by means of the stops 1^1, 2^1, 3^1, &c., acting upon the check cylinder, which is caused to make one half revolution, in order that it may offer to them the cut-away portion of its circumference. The sliding bar P, O, Figure 2, Sheet I., has a projection towards one end, which takes into the fork of a rod N, D, made fast to the common spring catch F, I, whereby it is raised at the first movement of the sliding bar, and allows the general check cylinder U to partake of the motion communicated to its axle by means of the stop with four teeth *t*, which is fixed to it, and caused to move by the two teeth *p*, *q*, carried by the sliding bar P, O. When this movement is accomplished, the other sliding bar M, N, which carries the projecting pieces a^1, b^1, c^1, commences to act upon the crank levers *a*, *b*, & to bring them to their fixed point. In pushing back the sliding bar P, O, the same movements are executed in a reverse direction, and the dials being brought back to 0, the machine is ready for working. The bringing back of the needles of the motive dials, Figure 1, Sheet I., is effected by the preceding method; that is to say, that the axles on which are fixed the needles L, M, A, B, Figure 20, Sheet 2, and Figure 1, Sheet III., carry at their other extremities cranked levers on which act projecting pieces similar to those carried by the sliding bar M, N, Figure 16, Sheet II. These pro-

© B O B Williams Printed22/11/2023 CalcPatents Ed. 1.doc

jecting pieces are attached to a sliding piece which is intended for that purpose, and is caused to move by the sliding bar M, N.

And having now described the nature of my said Invention, and in what manner the same is to be performed, I declare that what I claim are the improved calculating machines before described, in the peculiar combination, arrangement, and adaptation of which the same consist.

In witness whereof, I, the said Jean Jayet, have hereunto set my hand and seal, this Twenty-second day of April, in the year of our Lord One thousand eight hundred and forty-eight.

JEAN (L.S.) JAYET.

AND BE IT REMEMBERED, that the Instrument aforesaid was stamped according to the tenor of the Statute made in the fifty-fifth year of the reign of His late Majesty King George the Third.

Inrolled the Twenty-eighth day of April, One thousand eight hundred and forty-eight.

Redhill: Printed for His Majesty's Stationery Office, by Love & Malcomson, Ltd.
[Wt. 25—25/4/1912.]

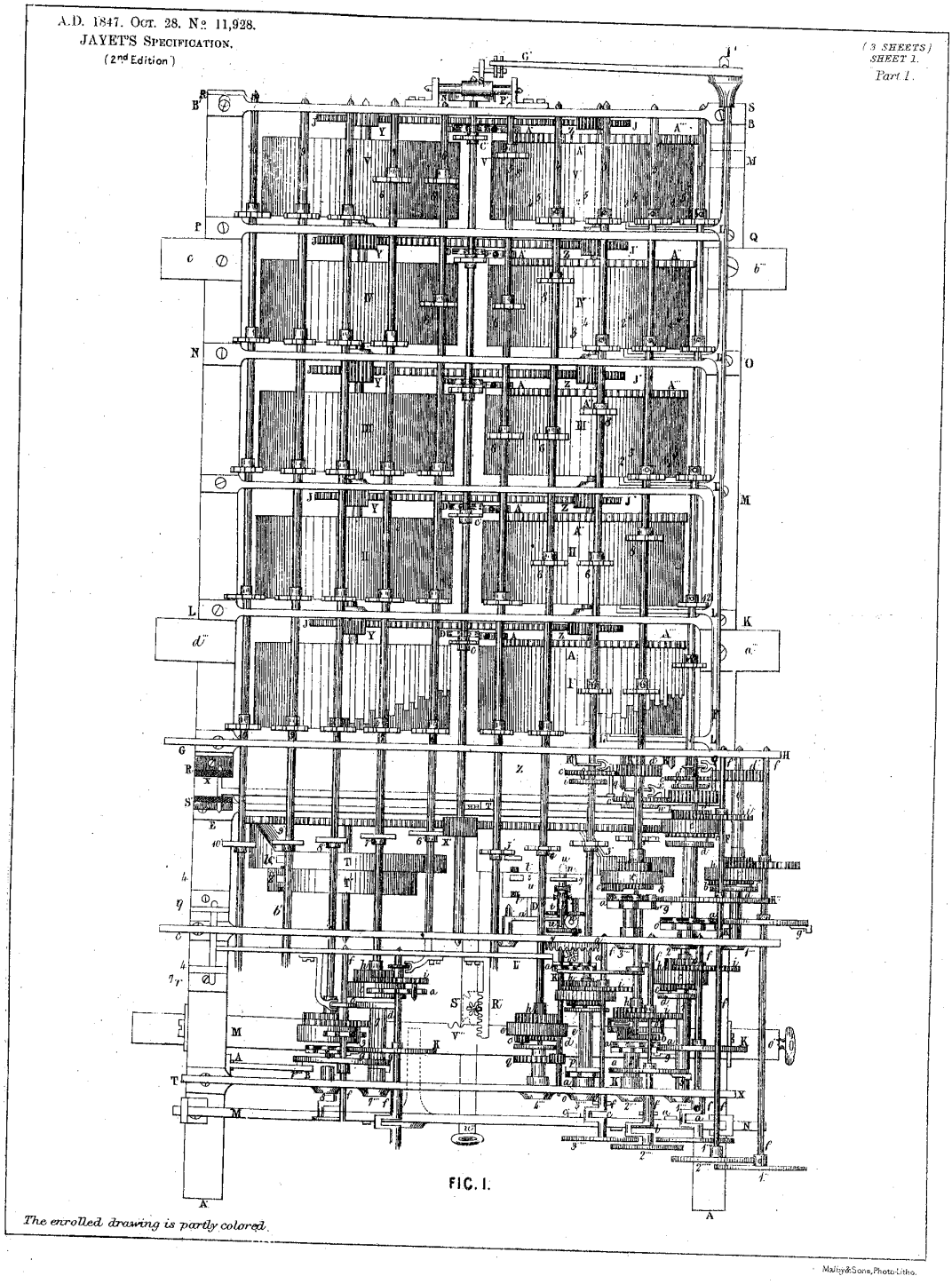
A.D. 1847. Oct. 28. N° 11,928.
JAYET'S Specification.
(2nd Edition)
(3 SHEETS)
SHEET 1.
Part 1.
FIG. 1.
The enrolled drawing is partly colored.
Malby&Sons, Photo-Litho.

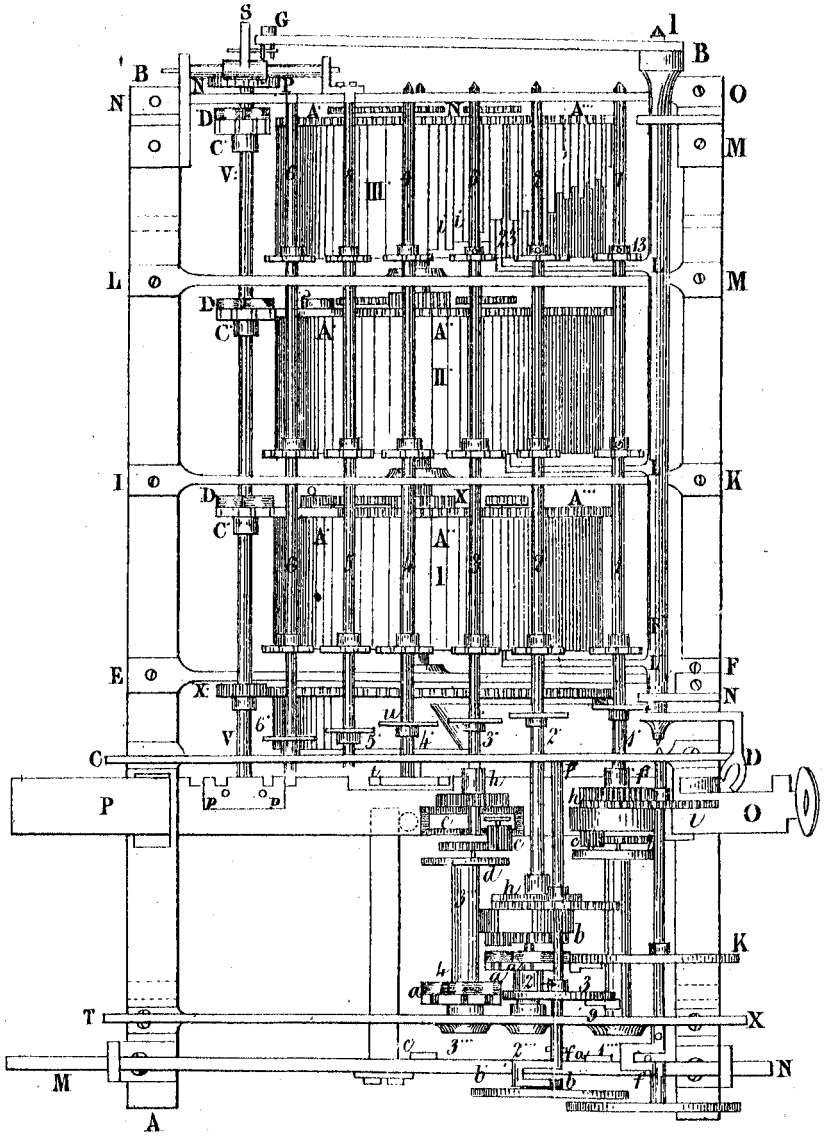

FIG. 2.

© B O B Williams Printed22/11/2023 CalcPatents Ed. 1.doc

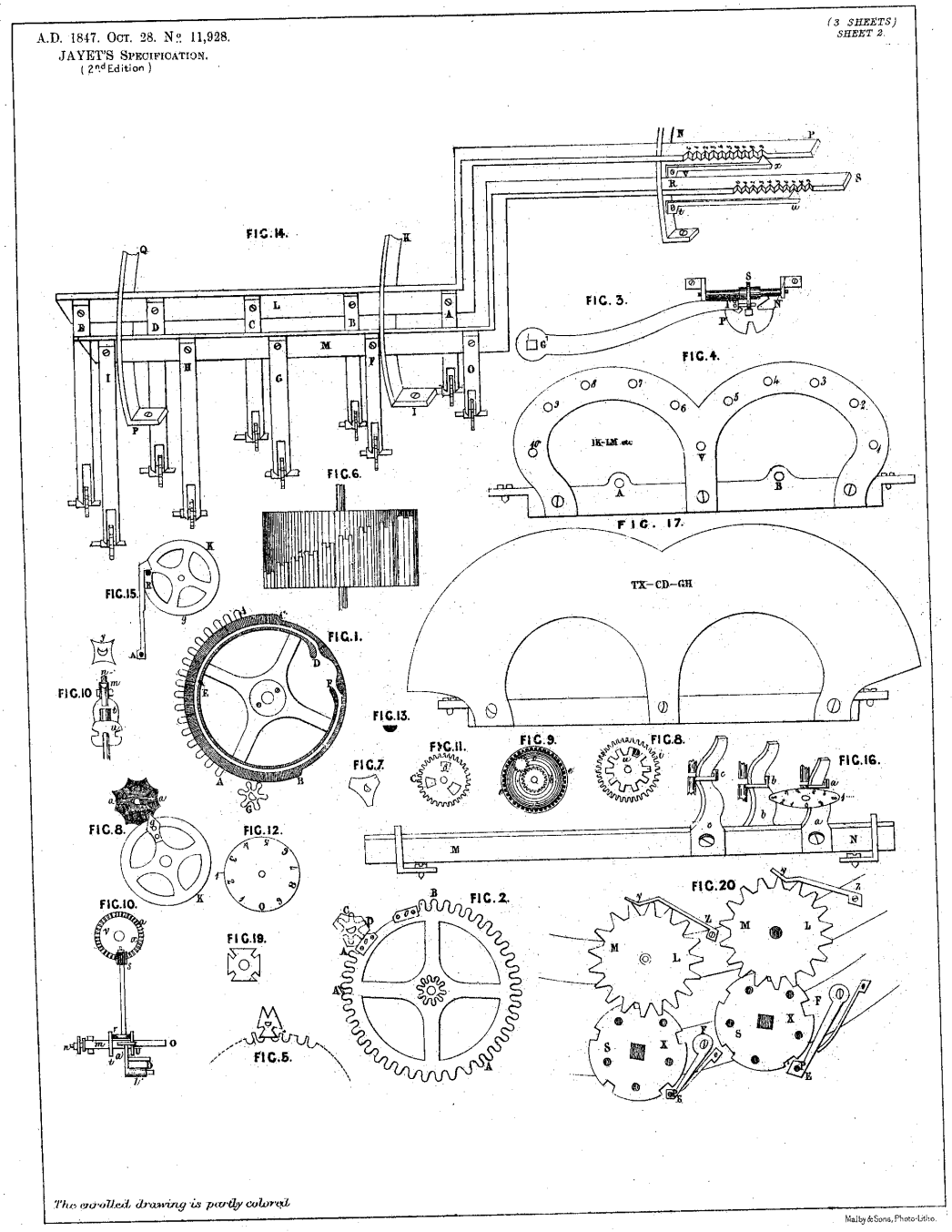
A.D. 1847. Oct. 28. N° 11,928.
JAYET'S SPECIFICATION.
(2nd Edition)
(3 SHEETS)
SHEET 2.
FIG. 14.
FIG. 3.
FIG. 4.
FIG. 6.
FIG. 17.
TX—CD—GH
FIG. 15.
FIG. 1.
FIG. 10
FIG. 13.
FIG. 11.
FIG. 9.
FIG. 8.
FIG. 7.
FIG. 16.
FIG. 8.
FIG. 12.
FIG. 10.
FIG. 18.
FIG. 2.
FIG. 20
FIG. 5.
The enrolled drawing is partly colored
Malby & Sons, Photo-Litho.

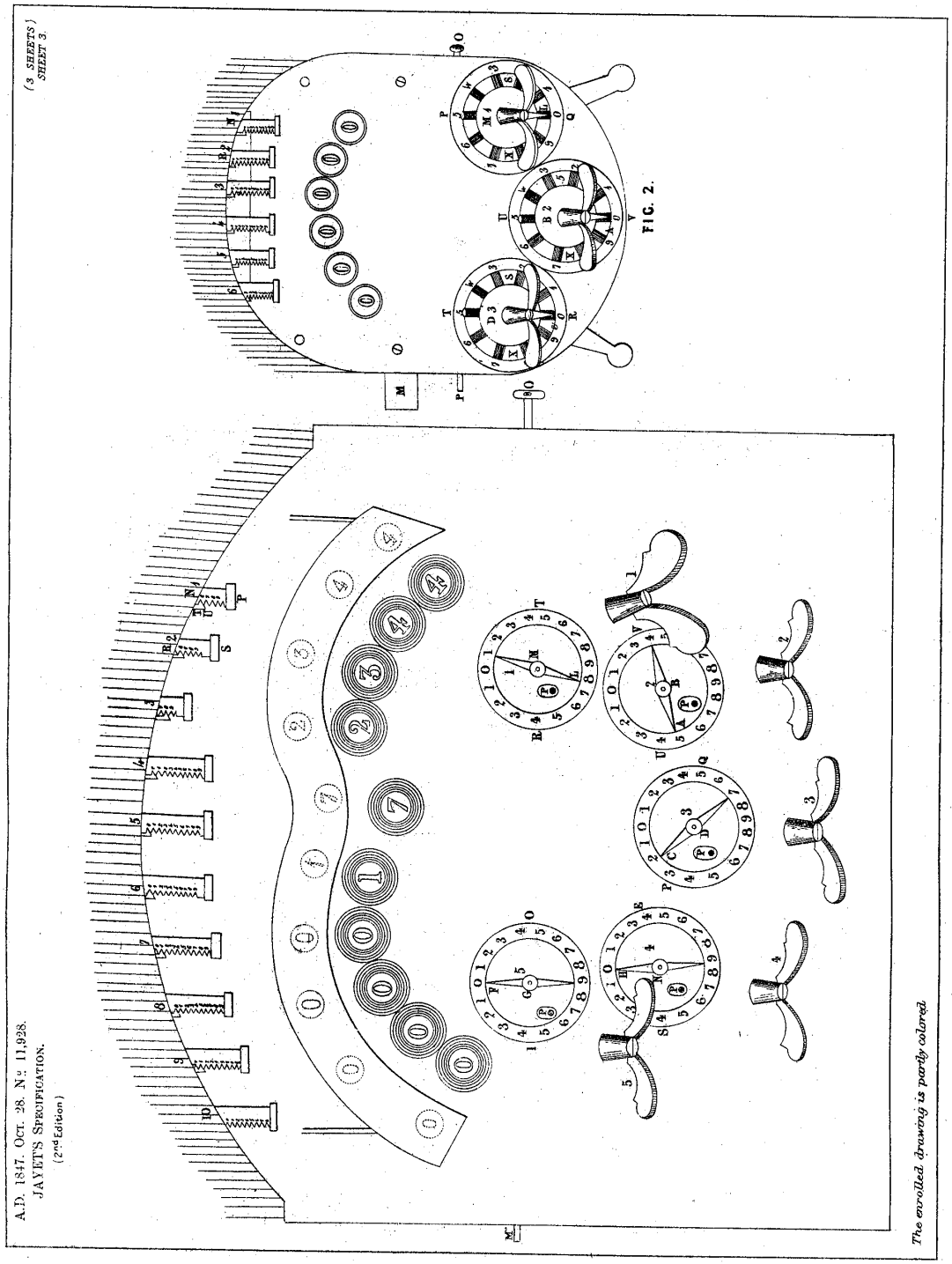
(3 SHEETS.)
SHEET 3.
A.D. 1847. Oct. 28. N.º 11,928.
JAYET'S SPECIFICATION.
(2nd Edition)
FIG. 2.
The enrolled drawing is partly colored.
Malby & Sons, Photo-Litho.

Jeffree F H 9704/1912 Tab calc for A S M D

9704. Jeffree, F. H. April 24.

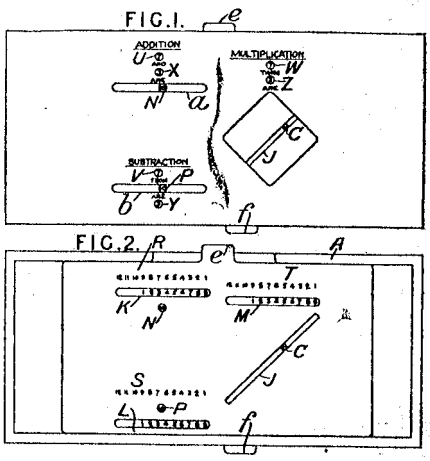

Adding and subtracting apparatus; tabular calculators.—In a device for adding, subtracting, or multiplying two numbers, two relatively-movable slides are provided which move in directions parallel to each other and have sets of numbers printed thereon visible through apertures in a cover-plate having other apertures to display the results of the particular calculation. The slides are guided by bars A of the casing and are adjusted by means of the projections *e*, *f*. Upon the stationary base-plate of the casing are printed the multiplication tables from 1 to 12, arranged in diagonal rows so that one row is visible through a diagonal slot C in the lower slide. On this lower slide are pivoted three series of numbers from 1 to 12 and two series from 2 to 24 (not shown); these numbers are visible respectively through slots K, L, M and apertures N, P, formed in the upper slide and through corresponding apertures X, Y, Z and slots *a*, *b* in the cover-plate of the casing. The upper slide has a slot J at right-angles to the slot C so as to expose only one number of the row visible through C, and on the slide are printed three series of numbers R, S, T, from 12 to 1, visible through apertures U, V, W in the top casing.

Jeffry C S 24239/1914 Slide rule for steam

24,239. Gray, J., [*Jeffry, C. S.*]. Dec. 17.

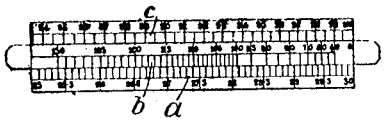

Slide-rules for calculating the vacuum efficiency of a condenser comprise three scales of which one is movable relatively to the other two. The scale *a* is logarithmically divided to represent the "vacuum" pressure in the condenser. Scale *b* is graduated on a logarithmic basis, its divisions representing the known temperature at which steam condenses under the corresponding vacua shown on scale *a*. Scale *c* is graduated logarithmically to represent vacuum efficiency.

Jelfs G W 15073/1908 Teaching fractions

15,073. Jelfs, G. W. July 16.

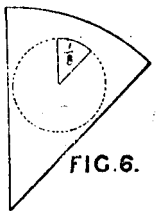

FIG. 6.

Calculating - apparatus for teaching fractions consists of a whole and a number of different segments or parts, each segment being provided with an outline geometrical representation of the shape of the whole, from which is marked off the particular segment or part of the whole which the said segment itself represents. The whole may be circular, the parts being segments of a circle as shown in Fig. 6, or the whole and the parts may be rectangular. The whole and parts may be of different colours and are made of cardboard, metal, &c. According to the Provisional Specification, the whole may be provided with a pivot pin or guide rim to aid in positioning the parts, and the whole and parts may be triangular and may carry advertisements or scholastic tables on the back.

Jenks G F 5489/1909 Teaching frame

5489. Jenks, G. F. March 6.

FIG.2.

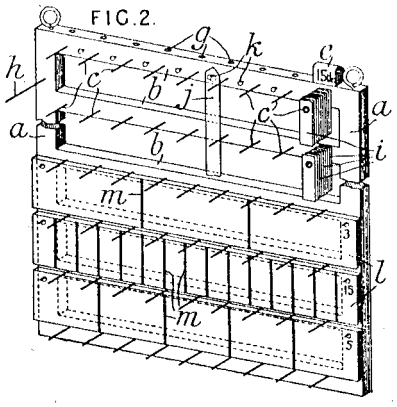

Calculating-apparatus.—An appliance for teaching arithmetic comprises a frame *a*, which is provided with one or more fixed or detachable bars *b*, each furnished with pegs or hooks *c*. Each peg or column of pegs *c* represents members of different value denoted by indicators, which may consist of reversible blocks or plates *e* having studs fitting into holes *g* in the top of the frame. In order to represent the number of digits, counters *i* are hung on the pegs *c*. The counters are stored ready for use on one or more auxiliary pegs or pins *h*, and may be blank, numbered, differently coloured, or cut out to represent the shapes of different figures. For teaching decimals, a vertical strip *j* is suspended between the pegs *c* from intermediate hooks or nails *k* to represent the decimal point. For teaching fractions, the bars *b* may be divided into the necessary number of aliquot parts represented by the denominator, but, when the bars are not detachable from the frame *a*, independent slats *l*, divided up by lines *m* and adapted to fit or hang upon the frame, are employed. The frame may be suspended upon an easel or from a wall &c.

Jennings R L 23627/1900 Circular slide rule for timber trade

23,627. Jennings, R. L. Dec. 27.

Slide-rules.—Consists of a circular slide-rule with logarithmic scales for use in the timber trade. The bed *i* contains two circular slides *g*, *h*, retained by buttons j^1,j^2. The outermost scale E ranges from $3\frac{1}{4}$ inches to 30 inches, advancing by $\frac{1}{4}$ inches in the counterclockwise direction, and the three inner scales A, B, C are repetitions of a single radius-scale in a clockwise direction, whereon the principal cubical and superficial equivalents per ton are distinguished by asterisks. The outer slide bears on its underside a double radius scale.

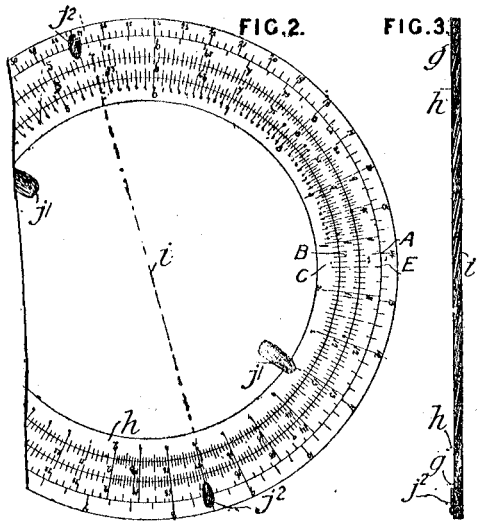

Jerand D 22636/1908 Abacus

22,636. Jerand, D. Oct. 24.

Calculating-apparatus. — A reckoning-apparatus is carried in a pencil box or the like, which also carries a book-rest &c., by two hinged members 4, 5 adapted to open by means of springs when a catch 10 is released.

FIG. 2.

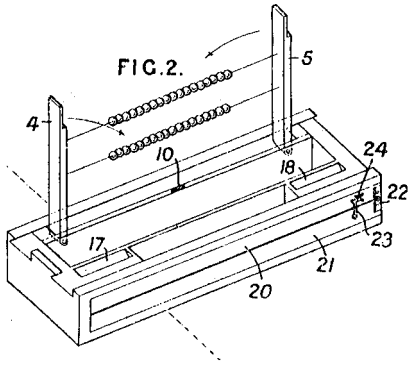

Jewsbury J 1127/1866 Solar position

1127. Jewsbury, J. April 21. [*Provisional protection only.*]

Calculating-apparatus.—The times of sunrise and sunset at any period of the year are indicated by a pocket sun-dial, which consists of a disc of metal, card, or other material, having the morning and evening hours marked in two segments, and months marked on another segment. An arm pivoted to the dial is placed so that a point projecting from the arm stands at the proper date on the month segment; the dial being held vertically, a finger hanging from the end of the arm indicates the times on the hour segments.

51

Jobson G 19970/1898 Very small tab calc

19,970. Jobson, G. Sept. 20.

Calendars; calculating-apparatus. — A spring-controlled roller B is mounted within a frame A fitted within the lid H of a match box or like receptacle, and carries a ribbon D which may bear any suitable information, such as the times for lighting cycle lamps, advertisements, and the comparative values of British and foreign coins, or may form a calendar, ready-reckoner, table of weights and measures, or a table of cycle gears. The ribbon may be secured upon the roller B by a split cylinder E, or it may be glued, sewn, or otherwise fixed. The frame A is formed of a piece of metal, slotted at A^1, and provided with two bent ends perforated to receive the ends of the roller B, and provided with one or more tongues adapted for preventing longitudinal movement of the roller B. The free end of the ribbon passes through the slot A^1 and is attached to a rod F, by means of which the ribbon can be unwound. A pawl and ratchet-wheel, mounted on the cylinder B, may be used for holding the cylinder stationary after the ribbon has been drawn out for inspection.

FIG. 3.

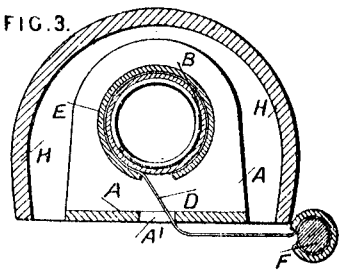

Johanson A M & Hultman I 11975/1905 Multiplier

11,975. Johanson, A. M., and **Hultman, I.** June 8, 1904, [*date applied for under Patents Act, 1901*].

Calculating-apparatus. — In multiplying-machines of the cam-ring and pin-disk type, locking-wheels on one of the wheels of the driven train are associated with cam-surfaces on the disk and ring, respectively, the wheels being interlocked at the carrying-points. Setting-knobs sliding in straight grooves rotate the rings when in the normal position only by means of screw-and-nut and worm-wheel gearing. Upon the main disks *a* with their driving-pins *b*, Figs. 1 and 3, are fixed the locking-cams a^1, extending from one end of the pin arc round the disk to the other, and a second cam r^1 on the cam-ring *r* is brought by the setting-means close to the last pin which is in operative position, both these cams being radially of such height that they approach closely the curved surfaces of the locking-wheel *f* and thereby lock the figure wheels save when the pins are driving the wheel *d*. Suitable gaps a^o, r^o in the cams allow the locking-wheels to move during transfer, which is effected by a staggered arrangement of transfer teeth upon the main disks, together with a transfer-pinion locking-cam. The cam-ring *r* may be shifted relatively to its main disk by means of a worm *s*, mounted on the disk and engaging pins *p* on the ring, and when the driving-handle is in its rest position the tail s^1 of the worm enters a slot k^1 at the forked end of a screwed spindle *k*, whereby the sliding of a nut *h* along a graduated scale determines the number of pins projected. This can only be done at the stated position of the handle by reason of a flange *l* on the disk adjacent to the worm and provided with a slot l^o which only gives room for the forked end to rotate when the main disks are in normal position. In modifications, the locking-wheels may be placed upon other wheels of the train.

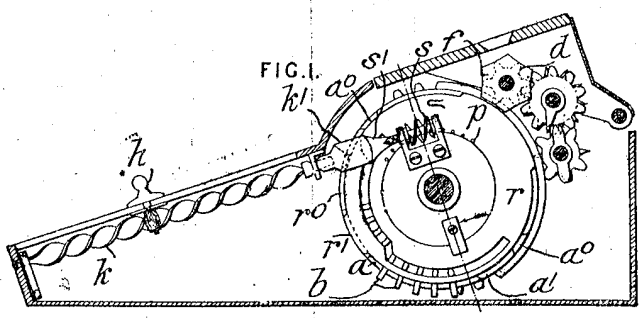

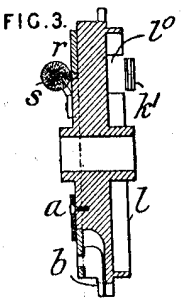

See Hultman & Johanson

Johansen G E 27114/1911 Add Subtract

27,114. Johanson, G. E. Dec. 4. [*Addition to* 22,939/10.]

FIG.2.

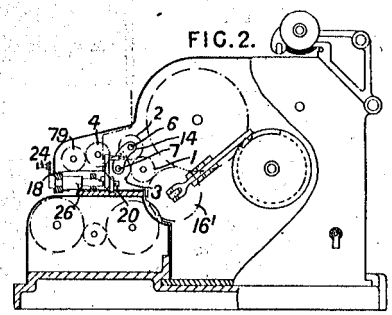

FIG.8.

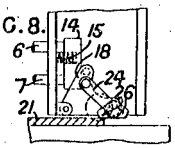

FIG.3.

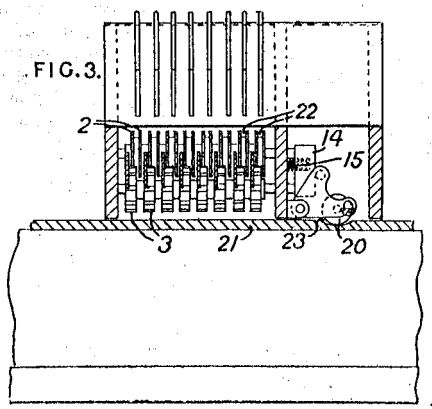

Adding and subtracting apparatus. — The checking-section is now arranged so as to be operated directly by the setting-section. Wheels 16¹ directly gearing with the setting-segments drive by gearing 1, 2, 3, 4 the checking-wheels 79, the pinions 2 being channelled at 22, and the pinions 2, 3 being carried on shafts 6, 7 attached by a cross-piece 14 and urged by a spring 15. A bent lever 18 with a roller 20 to engage a plate 21 on the casing thus throws one or both sets of pinions 2, 3 into gear with the train, causing addition or subtraction on the wheels 79 according to the recesses 23 in the plate 21 at the several positions. The lever 18 can also be rocked manually by a crank 24, which has a flat enlargement 26 to prevent manipulation unless the section is out of range of the plate 21 and properly opposite the addition and subtraction section.

Johnsen S 23885/1906 Pocket cash register

23,885. Johnsen, S. Oct. 26.

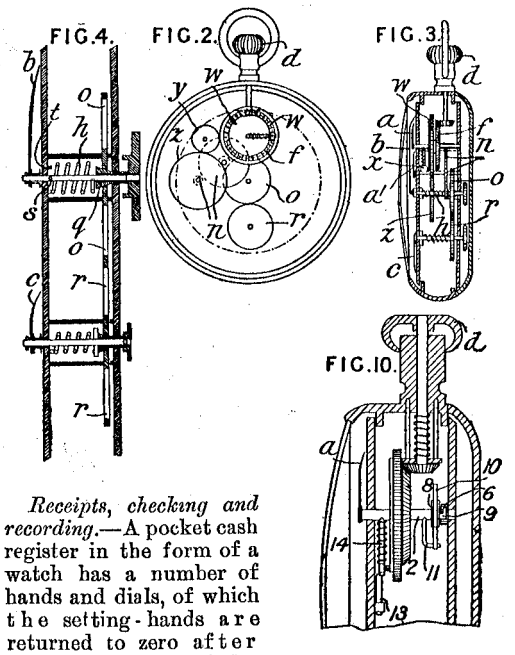

Receipts, checking and recording.—A pocket cash register in the form of a watch has a number of hands and dials, of which the setting-hands are returned to zero after each transaction, independently of the addition hands which continuously total the sums spent, and the subtraction hand which indicates the amount left in hand. The hand *a*, Fig. 3, is set by a knob *d* to the amount paid out, a bevel-wheel *f* being fast on its spindle which drives a pinion *w* by means of a pawl *x*, from which the totalizing-hand *a*¹ is driven by means of gearing *y*, *z*, Fig. 2; this in turn actuates the totalizing-hand *b* for the higher monetary value through gearing *n*, *o*. The subtraction hand *c* is driven by a pinion *r* gearing with the equal pinion *o* on the totalizing-hand spindle. To facilitate the setting of the amount-in-hand pointer *c*, the spindle of the totalizing-hand *b* is friction coupled to the pinion *o* by a split cone *q*, Fig. 4, pressed into engagement by a spring *h*, which also serves to set the pointer *b* to zero on releasing the coupling, stops *s*, *t* being provided on the spindle and casing for this purpose. On releasing the coupling, the hand *c* can be set to any amount; or a separate coupling may be provided, as shown, for the hand *c*. Totalizing-dials for higher amounts of cash paid and cash in hand may be fitted inside the back of the register with suitable gearing. The setting-hand *a* is zeroized

Johnstone T 13747/1914 Plane trig calc

13,747. Johnstone, T. June 6.

Plane-trigonometry calculators. — An instrument for solving problems in navigation and nautical astronomy comprises a disk *a*, angularly divided along its edge and provided with square-ruling *b*. An arm *d*, pivoted to the centre of the disk, carries a diametral scale *f* and a pointer *h*, ninety degrees behind. The method is described of using the apparatus to correct a longitude, derived from an assumed latitude, when a correct value for the latitude is subsequently obtained.

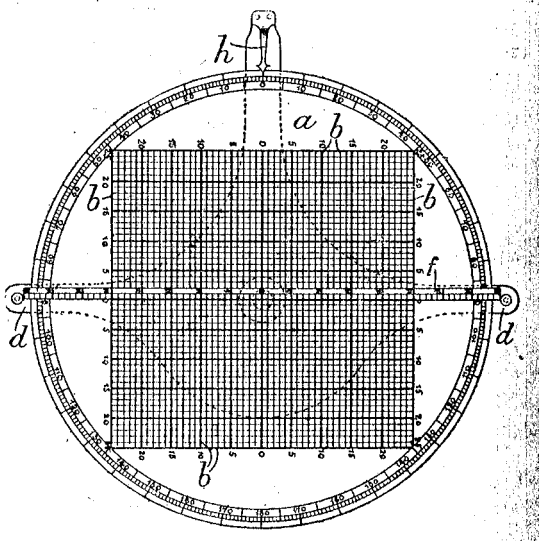

Johnstone G 11173/1894 Metacentric height

11,173. Johnstone, G. June 8.

Calculating apparatus.—Relates to means for determining the distance between the centre of gravity and the meta-centre. The ship is careened by moving a known weight athwart-ships. *a* is the frame of the calculating apparatus carrying a scale *d* of inclining moments in foot-tons, below which is a circular level *b* with graduations running radially to those of the scale above. *e*, *f* are respectively scales of meta-centric heights under special conditions, and of displacements in tons. A vertical slotted bar *g*, with adjustable index *k*, can slide across the frame, and an arm *o*, pivoted at *n*, can be brought into contact with *k* in any position. The instrument reading true level before the careening of the ship, and certain adjustments having been made subsequently according to the inclining moment the position of the bubble in the level and the displacement of the vessel, the arm *o* will read the required distance on the scale *e*.

11,173.

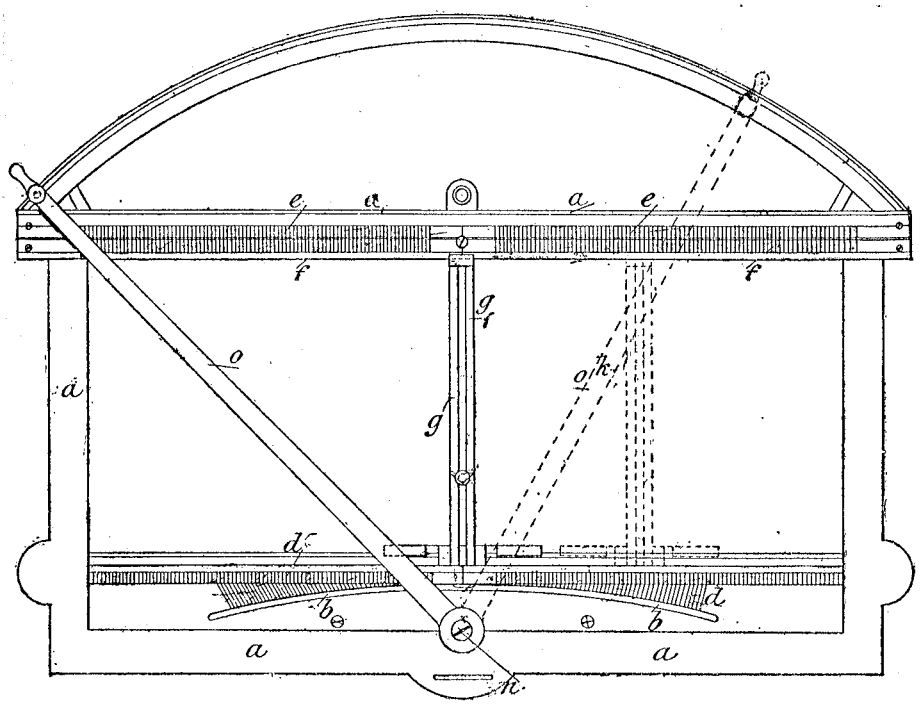

Jones E T 2083/1796 Detecting errors in accounts

JONES.
26th Jan. 1796.

2083. A grant unto EDWARD THOMAS JONES, of the city of Bristol, accomptant, of his new invented speedy and effectual method or plan for detecting errors in accounts of all kinds, and whereby such accounts will be kept and adjusted in a much more regular and concise manner than by any other method hitherto known ; to hold to him, his exors, admors, and assigns, within England, Wales, and town of Berwick-upon-Tweed for the term of 14 years pursuant to the statute; with a clause to inroll the same within one calendar month from the date hereof. W. H. M. at Westminster, the 26th day of January, in the year above. By writ, &c.

Jones J G 1426/1854 Apparatus for teaching addition, using sliding bars

A.D. 1854, June 28.—N° 1426.

JONES, JOHN GREGORY.—"Improvements in apparatus for "teaching addition."

"This invention has for its object a combination of parts which "can be changed amongst themselves, and present different rows "of figures to be added up by the pupil, the master having "a key to ascertain by inspection the sum of the whole for "himself."

Horizontal slides, carrying figures, are arranged in a frame in a vertical plane; "the vertical lines of figures may be changed by "moving the slides endways." By an arrangement of movable screens, only the desired number of slides, or of figures, may be shown to the pupil as an addition sum to be computed. "The tutor, by observing certain of the figures, will ascertain by a "key (which may be calculated to all the changes of the rows of "figures the slides are capable of presenting to view), and will "know whether the pupil has correctly computed the figures for "the time shown by the apparatus. By this means many pupils "may have the same sum presented to them, and it will only "be necessary for each pupil to write down the result calcu-"lated."

The drawing shows an apparatus in which the number of slides, or of horizontal lines, exposed to view at any one time is regulated by a roller blind at the upper part of the apparatus. The slides are moved endways by a projection which passes through a slot in the cover. The key for the teacher is at the right hand end of the apparatus. A spring catch, at one end of each slide, enters into notches in the guides, so as to prevent the slide from moving when once set.

[Printed, 6*d*. Drawing.]

Jones E T 2083/1796 Detecting errors in accounts. Chrono

Ocr extract from the full patent

The English system of book-keeping requires three books, called a day book or journal, an alphabet, and a ledger, which must be ruled after the following described method ; viz.: the day book to, have three columns on each page
for receiving the amount of the transactions, one column of which to receive the amount of debits and credits, one column to receive the debits only, and one column to receive the credits only ; or it may be ruled with only two columns on each page, one column to receive the amount of the debits, and one column to receive the amount of the credits. There must also be on each page of the day book four other columns ruled, two on the left side, next the amount of the debits, and two on the right side, next the amount of the credits, for receiving the letter or mark of posting and the page of the ledger to which each amount is to be posted. The alphabet need not be ruled at all, but must contain the name of every account in the ledger, the letter that is annexed to it as a mark of posting, .and the page of the ledger; the ledger must be ruled with three four, five, or seven columns on each page, as may be most agreeable, for receiving the amounts of the different transactions entered in the day book. And the process for using these books, or making up books of accounts on this plan, is as follows :—When a person enters into trade, whether by himself or with co-partners, he must have an account opened with himself in the ledger, entering first in the day book, and then to the credit of his account in the ledger, the amount of . the property he advances into trade. The account may be headed either with his name only, or else called his stock account. If you buy goods, give the person credit of whom you purchase; when you sell goods, debit the person to whom said goods are sold. If you pay money, debit the person to whom paid, not only for what you pay, but also for any discount or abatement he may allow, and give the cashier credit for the neat amount paid ; if you receive money, credit the person of whom you receive it, not only for what he pays, but also for any discount or abatement you may. allow, and debit the cashier for the neat amount received, taking care in these entries to have nothing misterious or obscure, but merely a plain narrative of the fact, introducing not one single useless word, and avoiding every technical term or phrase except the words debit and credit, which are full and comprehensive, and the only terms that are applicable to every transaction, and may be affixed to every entry. But as a hurry of business will sometimes take place in almost every counting-house, which may cause the entries to be made to the debit instead of the credit of an account in the day book, and to the credit instead of the debit, I have endeavoured as much as possible to counteract the evil by having only one column for receiving the amount of every transaction, whether debits or credits, at the instant of making the entry; and for the convenience of separating the debits from the credits previous to the posting which is necessary to prevent confusion and perplexity_ I have two other columns on the same page; that on the left side, into which the amount of every debit must be carefully entered, and that on the right for the amount of the credits, which columns must be cast up once a month, the column of debits and credits of itself forming one amount, the column for the debits producing a second amount, and the column of credits a third amount, which second and third amounts, added together, must exactly agree

with the first amount, or the work is not done right. By this means the man of business may obtain monthly such a statement of his affairs as will shew how much he owes for that month, and how much is owing to him ; and the debits, being added together for any given time with the value of the stock of goods on hand, will, when the amount of the credits is substracted therefrom, shew the profits of the trade.

I shall now proceed to the process of posting, which begins with opening an account in the ledger with every person to whose debit or credit there has been an entry made in the day book, affixing to each account a letter, which is to be used as a mark of posting. The person's name, place of abode, and the folio of the ledger must then be entered in the alphabet, with the same letter prefixed to each name as is affixed to the account in the ledger. Next, the page of the ledger on which each account is opened (and which will be seen in the alphabet) must be affixed to each amount in the day book, in the column for that purpose. The date and amount of each debit must then be posted in the columns for receiving it in the ledger, on the left or debit side of that account to which it relates, entering, as a mark of posting, in the day book, against each amount, the same letter that is affixed to the account in the ledger to which said amount may be posted, observing that the debits of January, February, and March, &c. must be posted into the column for those months in the ledger, and the credits must also be posted in like manner, filling up each account in the centre, at the expiration of every month, with the whole amount of the month's transactions, thus having in a small space the whole statement of each person's account for the year, in the columns to the right and left, the amount separately of each transaction, and in the centre a monthly statement.
Having described the process of this method of book-keeping, I shall shew how to examine books kept by this method, so as to ascertain to an absolute certainty if the ledger be a true representation of the day book ; i.e., not only if each transaction be correctly posted as to the amount thereof, but also if it
5 be rightly entered to the debit or credit of its proper account. This examination differs from the modes that have heretofore been practiced, as well in expedition as in the certain accuracy which attends the process, it being only necessary to cast_ up the columns through the ledger debits and credits, according to the example given, and the amount of those columns, if right, must agree with the columns in the day book for the same corresponding space of time. These castings should take place once a month, and if the amounts do not agree, the posting must then, but not else, be called over; and when the time, whether it be one, two, three, or four months, that is allotted to each column in the ledger, is expired, the amount of each column should be put at the bottom of the first page, and carried forward to the bottom of the next, and so on to the end of the accounts, taking care that the amount in the day book of each month's transactions be brought into one gross amount for the same time. But although this process must prove that the ledger contains the whole contents of the day book, and neither more or less, yet it is not complete without the mode of ascertaining if each entry be posted to its right account, which may be ascertained by the following method:--I have laid down a rule that a letter which may be used alphabetically, in any form or shape that is agreeable, shall be affixed to each account in the ledger, and the same letter prefixed to the names in the alphabet. These letters being used as marks of posting, and affixed to each account in the day book as it is posted, it is only necessary therefore to compare and see that the letter affixed to each entry in the day book is the same as is prefixed to the same name in the alphabet. A difference here shews, of course, an error, or else it must be right. At the end of the year, or at any other time

when persons balance their accounts, if there be no objection to the profits of the trade appearing in the books, the stock of goods on hand at prime cost may be entered in the day book, either the value in one amount, or the particulars specified, as may be most expedient,, and an account opened for it in the ledger, to the debit of which it must be posted. The casting up of the ledger must then be compleated; and when found to agree with the day book, and the amount placed at the bottom of each column, subtract the credits from the debits, and it will shew the profit of the trade, unless the credits be the greater amount, which will show a loss. In taking off the balances of the ledger one rule must be observed, and it cannot be done wrong :—As you proceed, first see the difference between the whole amount of the credits and debits on each page for the: year, with which the difference of the outstanding balances of the several accounts on each page must exactly agree, or the balances will not be taken right. By this means every page will be proved as you proceed, and the balances of ten thousand ledgers, on this plan, could not unobservedly betaken off wrong.

Joy D G 2990/1906 Printer adder

2990. Joy, D. G. Feb. 7.

Calculating-apparatus.—Relates to a machine for summing and printing items of weights, measures, money, &c., and printing the totals so obtained, and comprises a series of type-wheels rotating on one axis and set by a single lever and disconnectible gearing, and an arrangement of parts so that the original copy, the dial for the setting-lever, and the printed matter are in the same plane of view and adjacent to each other. The items for a line are separately printed. Figs. 1 and 5 show a machine for printing gross and tare weight items and totals. The item-wheels 47^a, 47^b, 47^c, 47^e, 47^f, 47^g are loose on a shaft 66 rotated by means of gearing 26, 27 and a handle 1 working in a graduated slot. Each item-wheel carries an eccentric disk 73, Fig. 3, guided by pins and slots 51 and formed with a half-round and half-square hole for connexion with a squared part 50 of the shaft 66. The disk 73 is normally held raised by means of a rod 52 and spring 31, and is depressed by means of a lever 34. The several levers 34 are

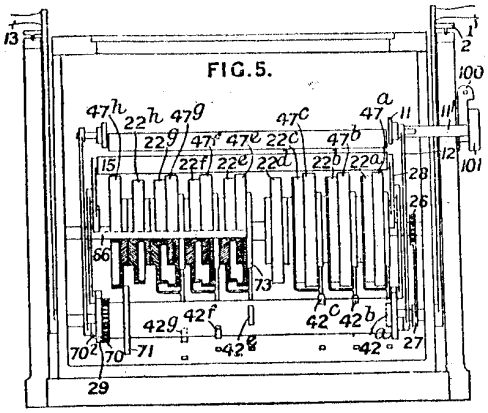

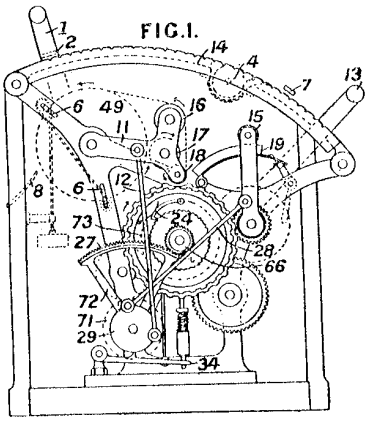

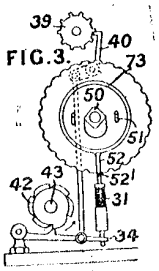

successively operated by means of spaced arms 42^a, 42^b, 42^c, 42^e, 42^f, 42^g on a sleeve 42 loose on a shaft 43, and rotated by a handle 13 on the shaft 43 and pawl-and ratchet gear 70, 72. The cams are so shaped and arranged that a half-stroke forward of the handle 13 throws the last item-wheel out of gear and brings the next item-wheel into gear. Consequently, in operating the machine, the handle 13 is given a half-stroke forward, the handle 1 is moved forward to set the item-wheel, the handle 13 is moved full forward and full backward, and then the handle 1 is moved backward to return the item-wheel to blank position. The slot for the handle 1 is notched and the handle is provided with an indicator 2 fitted with a spring catch taking into the notches. The total-wheels 22^a, 22^b, 22^c, 22^e, 22^f, 22^g, 22^h are arranged beside the item-wheels, and are actuated by internal ratchet gears 24 and counter gear for reducing to proper denomination. The total-wheels are of smaller diameter than the item-wheels, and the blanks of the item-wheels are accordingly of reduced diameter to allow of printing from the total-wheels as shown in Fig. 1. The total-wheels are normally locked by pins 52^1, Fig. 3, on the rods 52. A type-wheel 47^h, Fig. 5, for line-numbering, is set by a wheel 71 on the cam-sleeve 42 and gear 72, 73. The paper is led from a roll 49 over rollers 17, 18, 16 in swinging arms 11 and out under an inspection opening 14 and over a tray 8. Tension is maintained by a spring roller or, as shown, weighted rollers 6. Line-spacing is effected by means of a toothed wheel 39, Fig. 3, on the roller 17 and a pawl 40 set in position to be engaged by the wheel 39 by connexion with the lever 34 of the end item-wheel 47^g. The arms 11 are connected by links 12 and crank-disks 29 to the shaft 43. For printing totals, the pawl 70^2 is disengaged from the ratchet-wheel 70, and the roller arms 11 are shifted laterally by a means of a sliding shaft 11^1 provided with a head 101 and retained by a key 100. An inking-roller 15 travelling over an adjustable pad 19 is actuated by connexions 28 with the disks 29. The copy is held by a roller 4 and a line-marking bar 7. Reference is made to Specification No. 2990A, A.D 1906. In the machine described in the Provisional Specification, the item-wheels are set by one or more levers or from a rotating dial through disconnectible gearing controlled by keys, one for each item-wheel. There is an extra type-wheel for numbering and dating. A sliding paper carrier is actuated by a handle. The impression roller is provided with ratchet mechanism and a handle for line-spacing, and carries a line-counting dial. The line-spacing mechanism may be actuated from the impression handle. A fixed inking roller or pad is used. The line-marking bar of the copy-holder may be automatically moved by a band attached to the shaft of the paper roller. The item-wheels are connected with separate counter dials for registering totals, and there may be gear for reduction to proper denominations. The counter dials may be connected with type-wheels for printing totals. The dial for setting the item-wheels may be in the form of a ring and may be stopped at any desired point by pins, which may be worked by levers on a keyboard. The scale co-operating with the dial may be movable to follow the dial. A stop may be provided on the dial for use in setting successive identical numbers. The gross and tare wheels may rotate in opposite directions and connect into a common wheel to give nett weights.

Jowett & Squire 122435 of 1917 Drums carrying printers

122,435. Jowett, T., and **Squire, C. E.** Dec. 20, 1917.

Calculating-apparatus; differential mechanism; slide-rules.—In calculating apparatus comprising a series of drums carrying printers moving over scales representing a number of variables, the drums are differentially connected so that, after setting the known factors, the unknown can be read off on the remaining dial or dials. The de-

vice is described as arranged for five variables employed in the calculation of the dimensions of springs required for given duties, the variables being represented by drums A - - E having uniform or variable radii. Of these, the factor represented by the drum E is unknown and that represented by the drum B has only a few definite values. Attached to the spindles S of the drums are pointers P moving over logarithmic or other scales. A wire W passes from the drum A, to which it may be connected by a rack and pinion, over a pulley 1 mounted on a carriage G moving

FIG.I.

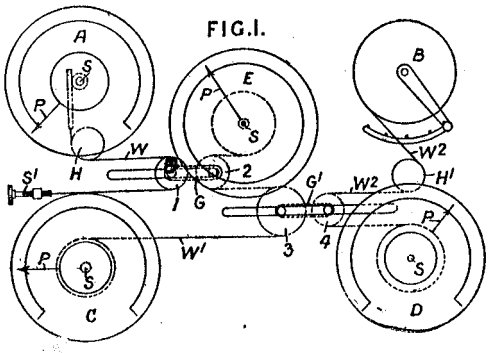

in a guide parallel to the wire, it being secured to an adjustable stop S^1. A wire W^2 from the drum B passes over a pulley 4, on a carriage G^1, on to the drum D, intermediate jockey pulleys H, H^1 being employed for the wires W, W^2. A wire W^1 connecting the drums C, E passes over pulleys 2, 3 on the carriages G, G^1. The drum spindles are held by friction brakes and serrated knobs are employed for setting purposes with the exception of the drum E which is spring-retracted so as to keep all the wires at a slight tension. In a modification, systems of links and levers may be substituted for the wires and drums.

Katz M 25755/1907 Tab calc for interest

25,755. Katz, M. Nov. 20.

Calculating-apparatus.—Apparatus for computing the number of days between any two dates of a year, and the interest on any sum at any rate for such period, consists of three table-bearing sheets mounted on rollers in a frame and provided with means for moving them and for preventing over-driving. The table of dates and intervals on sheet 8, Fig. 1, mounted upon the rollers 7, bears in an horizontal line at the top the dates of all the days in a year, one of which is exposed through an aperture 4 of the glass cover 2, and also pairs of horizontal rows 4^1, 4^2 of figures for all the months of the year; the names of the months and the figures 4^3 indicating days thereof are marked upon the glass cover 2. The rows 4^1, 4^2 indicate the number of days from any given date appearing at 4 to any later date of a year or former date respectively. The driving-mechanism for the sheet consists of bevel-wheels 10 provided with toothed hubs and gearing with bevel-wheels 12 on the rollers 7. Longitudinal motion of the wheels 10 is prevented by pins in their bearings 24 engaging in slots 23 in the toothed hubs. The driving-shaft 9 which carries pins 25 engaging with and driving one or the other of the toothed hubs, according to its direction of rotation, is however cable of sliding a short distance longitudinally determined by the pin and oblique-slot connexion 28, 27, between the

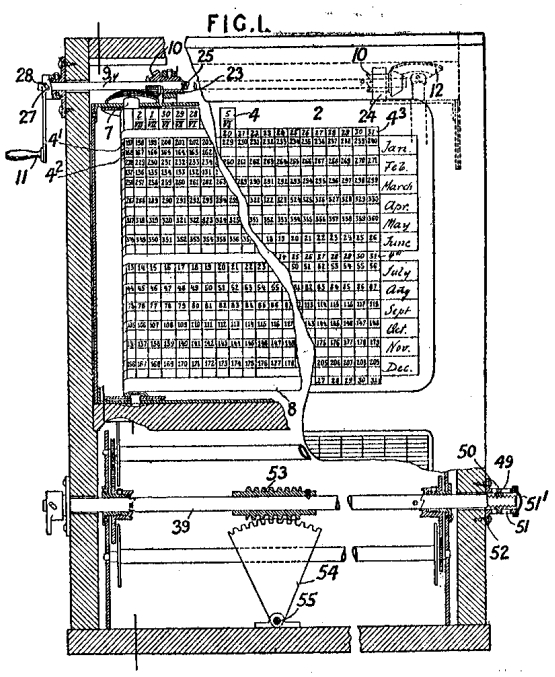

Karasek K & Aumund J 26464/1905 Adder for £sd

26,464. Karasek, K., and **Aumund, J.** Dec. 19.

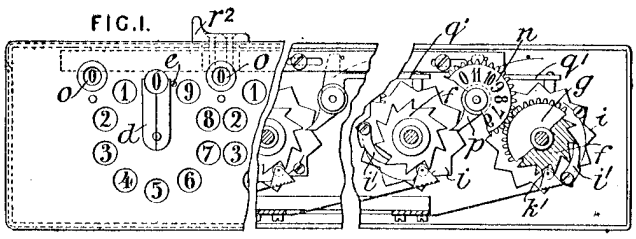

Calculating-apparatus.—In an adding-machine for English monetary values, each denomination has its own horizontal numeral disk and its setting-dial, consisting of a sharp-edged index piece manually moved round over a circle of stationary numerals under the control of a star locking-wheel and detent, whereby each step can be definitely felt and inspection is not necessary, springs restoring all the index pieces to zero position when released by a resetting-slide. The spindle of each setting-piece *d* is moved counter-clockwise against a spring between the spindle and the casing, and carries round the locking-wheel *i*, with pawl i^1 driving the ratchet-wheel *f* and actuating-wheel *g*, which are in one piece and loose upon the spindle. Pinions on the numeral disks *n* are thus turned and disclose the totals through apertures *o*, transfer being effected by a tooth *p* engaging the next higher ratchet-wheel at intervals determined by the monetary system. To re-set, the slide r^2 is moved to the left and rocks all the spring-detents q^1 out of engagement with the locking-wheels, whereupon the springs on the spindle bring back all the index pieces to their stops *e*, and the spring rollers k^1 prevent motion of the numeral disks. Alternative methods of locking the spindle may be employed.

Keighley C W 21842/1910 Add print

21,842. Keighley, C. W. Sept. 20.

Adding-apparatus for monetary values with operating-means. — A key-set lever-operated adding-machine is adapted to print items and totals from a single set of type. The keys are pin-and-slot geared to meshed sets of levers 27 the bent ends 29 of which stop racks 30, which gear with wheels 37 having weights 40 or springs to urge the racks forward. The item-indicators 60 are attached to the wheels 37, and are read through an aperture 61. Pins 48 on the key stems engage bevelled notches in sliding rods 50 so as to retract spring catches 45 from stop pins on the wheels 37. Friction catches 46 are simultaneously withdrawn from similar stop pins 42. The friction catches are only withdrawn by key action or by the lever 161 carrying the transfer-pawl by means of levers 163 and 166. By this means, item-wheels 37 to the left of the highest significant figure are prevented from moving from the "blank" to the "zero" position, so that useless ciphers are not shown or printed. The adding-wheels are carried on a shaft 112 mounted in a frame 113 rocked about a pivot 114 by a cam 118 to throw them into and out of gear with the wheels 37, the amount on the wheels 37 being transferred to the adding-wheels by the cam 127 zeroizing the wheels 37 by means of the lever 124, link 123, and yoke bar 119. After disengagement with the adding-wheels, the wheels 37 are brought to the "blank" position by a further surface 128 on the cam. The keys have bevelled projections to latch over stirrups which are withdrawn by a lever 171 and cam on the main shaft.

Transfer mechanism. — Tripping-pins on the adding-wheels thrust back levers 161, which are held so set by springs 137 until a sliding block 140 is moved across the machine by a flexible connexion 142 from the type-carriage operating-shaft, thus resetting the levers 161, and causing the transfer pawls 136 to advance the higher wheels by one unit.

Zeroizing-mechanism.—The spindle 112 is slid lengthways against a spring and rotated by means of a cranked sleeve with an inclined slot, arms 148 on the shaft engaging pins 149 on the adding-wheels so as to bring them to zero position. At the same time, cam-disks on the cranked sleeve depress a yoke 158, so as to withdraw the transfer-pawls from their wheels.

Printing-mechanism.—The type are carried in bows 66 attached to spindles 67 mounted in a carriage 62, from which they project on either side alternately. The spindles are cranked and linked to spring-controlled levers 70, which bear against spring plungers 75 mounted in a central bar on the carriage. These plungers are engaged by rollers 76 on the racks 30 in their several positions as set, so that the type are struck in succession as the carriage is moved across the machine. The carriage is traversed

172

© B O B Williams Printed22/11/2023 CalcPatents Ed. 1.doc

Kellett T W 582/1879 Portable add printer

582. Thompson, W. P., [*Kellett, T. W.*]. Feb. 14.

Cash receipts, checking &c.—Relates to a portable apparatus for stamping the amount received on the receipt form, and at the same time making a duplicate impression on a running tape; also registering the total cash received. Fig. 4 shows the apparatus with the door removed. The receipt form is introduced into a slit Y^1, and, on pressing the end of the machine, the amount to be recorded is stamped on the form by a series of stamping-wheels D^1, D^2, &c., which at the same time impress a tape carried by suitable rollers Q^1, Q^2, &c. The stamping-wheels are set to the desired amount by an intermediate pinion operated by a handle B^1. This pinion, which can be traversed along its shaft, by a slide worked from the outside of the case, so as to engage with any one of the stamping-wheels, also engages at the same time with a series of registering-wheels; thus the operation of setting the stamping-wheels to any amount adds that amount to that previously recorded on the index of the registering-wheels. The registering-wheels are connected together by suitable mechanism so as to move progressively, though any one wheel may be moved without disturbing the wheels below it. Springs S are provided to prevent the wheels moving except when required. The amounts indicated by both sets of wheels are shown through corresponding slits or openings in the case. The impressions on the receipt form cannot be obtained until the slide, before mentioned, is in a certain position, and the action of stamping returns the stamping-wheels to zero by means of a coiled spring &c., stops being provided to prevent their going beyond zero. The frame C, carrying the mechanism, is returned, after being pressed, to its former position by springs W. A carbonized ribbon passes between the receipt form and the recording-tape, or ink may be used. The name of the firm and the date are printed at the same time by type set in holders P, P^1, P^1.

FIG. 4.

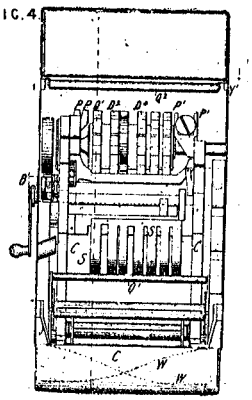

Kelling K 19870/1903 Multiply two key boards

19,870. Kelling, K. Sept. 15.

FIG.1.

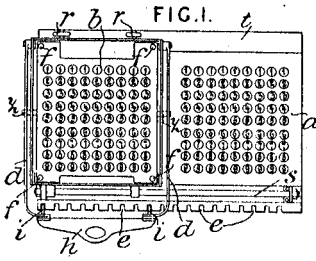

FIG.2.

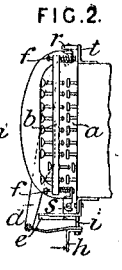

FIG.5.

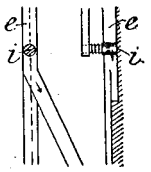

Calculating - apparatus. —A repeating-device for enabling multiplication and division to be performed by a keyboard adding - machine or the like, consists of a second movable keyboard, the desired keys of which are locked down and the board then placed over the main keyboard so that when depressed it will actuate the main keys. Figs. 1 and 2 show the main and repeating-keyboards *a*, *b*, of which the latter can slide on the rod *s* and has rollers *r* resting on the rail *t*, whereby it can be displaced laterally from the main board as shown, or lifted off it. Normally springs keep the board *b* raised to its highest position on the bolts *f*. The number to be repeated is set on the auxiliary keys, which have devices of known type for holding them down, and for preventing depression of two or more keys in the same row, and the repeating-board having been placed over the main board, the bar *h* is depressed, swinging down the side-bars *d* and forcing the repeating-board downwards by means of plates *z*. The number so applied may have its decimal place altered without resetting by moving the keyboard laterally, and to facilitate division there may be pins *i* engaging in notches *e* on the main frame, whereby, after operation in one position, the repeating keyboard may be shifted one place to the right, either by the automatic fixed switch shown in Fig. 5, or by an open switch when the board is pressed to the right.

Kelt A 8720/1888 World time cylinder

8720. Kelt, A. June 14.

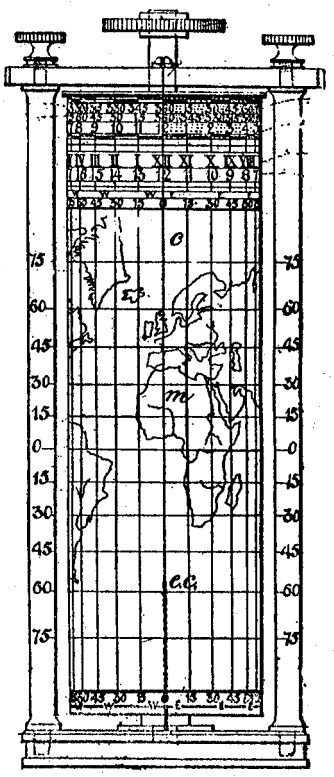

Calculating-apparatus for finding local time &c. A cylinder *c* bearing a map of the world, and a ring *m* graduated in longitudes and hours, can be rotated separately or together beneath a stretched meridian wire *e c*. They are rotated separately till a given place and time are under the wire meridian, then together till the place of which the time is to be compared is under the wire, when the ring shows the required time. The instrument serves also to find antipodes and arcs sailed.

Kelway C E 3539/1883 Shore distance

3539. Kelway, C. E. July 18.

[*Provisional protection only.*]

Calculating-apparatus.—For use when ascertaining the distance of an object from the angles subtended at the ends of a base. The apparatus described for use on board ship consists of a graduated slotted rule with a graduated straight-edge centred at one end and a graduated straight-edge on a centre sliding in the said slot. Sectors indicate the angles these straight-edges make with the rule. The first straight-edge is set corresponding to the angle of the first sighting with the course of the ship, and when a determined distance has been run by the ship, the movable centre is brought to the corresponding position on the rule, and its straight-edge set at the angle of the second sighting. The intersection of the straight-edges will indicate the position of the object. In a modification, used in case the ship's course is altered between the times of the two sightings, a graduated slotted arm is fixed to the movable centre, and the second straight-edge is on a movable centre in this slot, the first part of the course being represented on the rule and the second part on the said arm. In another modification, the angles subtended by two distant objects of known distance apart are made use of.

Abridged also in Class *Philosophical instruments.*

Kennedy J F 122087 of 1918 Gunnery calc

122,087. Kennedy, J. F. March 22, 1918.

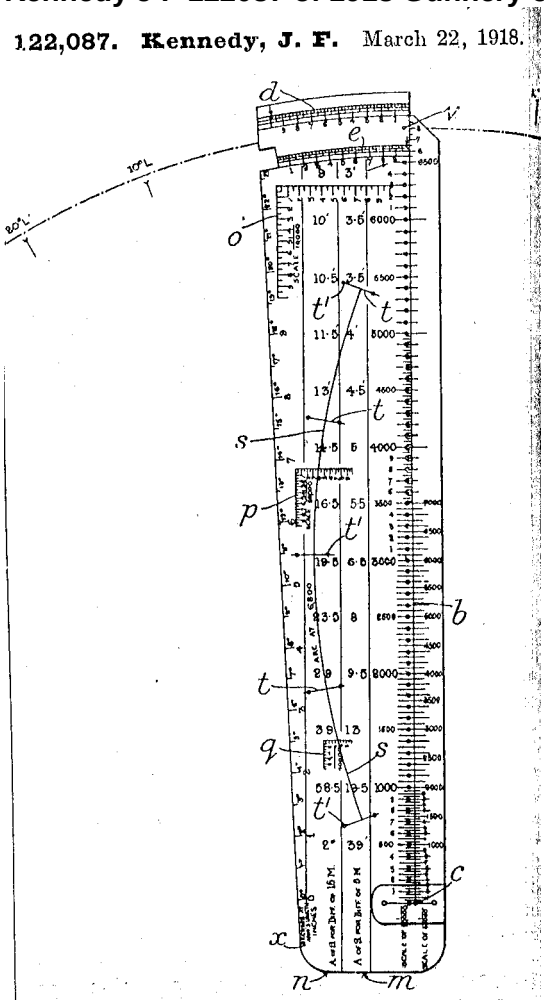

Gunnery calculators.—An instrument for deter mining on a map the angular and distance rela tions of an object with reference to a given point such as a gun position, comprises a strip of trans parent material marked with a scale of dis tances *b* equal to the range of the gun th zero end *c* of this scale forming an axi upon which the instrument is rotated whilst the upper end of the strip is arc-shape concentrically with the axis and is provided wit two similar degree scales *d*, *e* which terminate a the opposite edges of the instrument, and are s disposed thereon that by scribing at the end

Kerr D S 10854 &10855/1912 A S and dates

10,854. Kerr, D. S. May 7.

Adding and subtracting apparatus.—In date-reckoning apparatus means are provided for showing the date and the numbered days with day names for a year ahead. A casing with a removable top has five series of slots, each series consisting of three slots. At each left-hand slot is exhibited on fixed plates 18 the number of the day in the year backwards and forwards, at the middle slot is exhibited the month and the day on a movable endless strip 20, and at the right-hand slot is exhibited the day name on a septagonal prism 35. The date always appears at the top of the left-hand column. The strips 20 have 146 days inserted on them and are carried on frames 21, threaded on spindles 45, 47, of which the upper spindle is squared to drive sprocket-wheels 29 engaging the notched edges of the strip 21, and bevel-wheels 39 for setting the septagonal prisms by means of double bevel-gears 38. The prisms are carried in brackets 42, 43 attached to the supporter 21, so that the prism and month day-strip carrying-parts form units which can be moved bodily. A knurled head 47 on the spindle is used for setting the calendar each day. At the end of 73 days, the left-hand unit is removed and placed in the right-hand place, the others being moved to the left. In the case of leap years, the prisms are replaced when necessary by day-strips

257

49 operated similarly to the month strips, and the sections including February have special day-strips comprising a core 52 surrounded by loose strips 55 lettered for the days, the core and strips being suitably notched for engagement with a sprocket-wheel. The assembling-spindles 45, 47 are prevented from being withdrawn by a slotted strip 59, which cannot be raised to permit withdrawal unless the top of the casing is opened.

FIG.7.

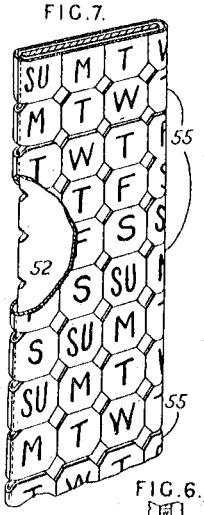

FIG.6.

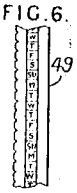

FIG.1.

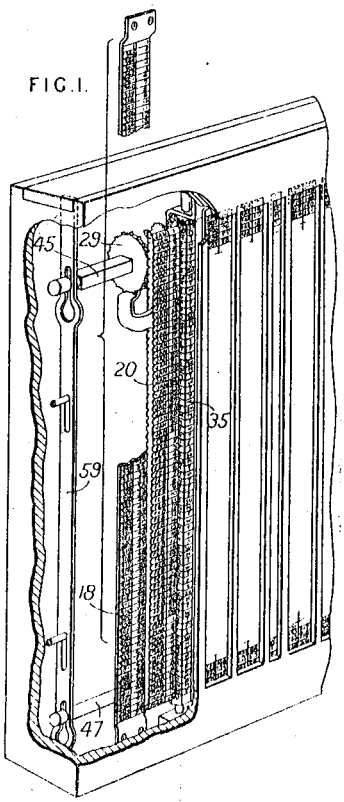

FIG.2.

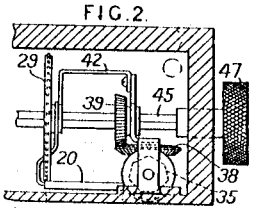

FIG.3.

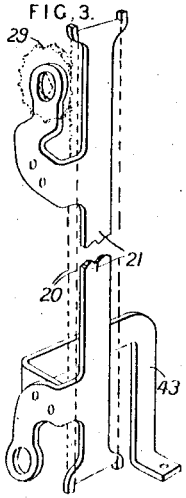

10,855. Kerr, D. S. May 7.

FIG.1.

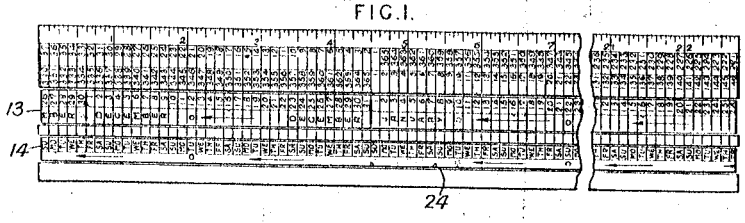

FIG.3.

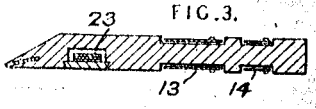

Adding and subtracting apparatus.—For calculating dates, a wooden or other base has two grooves and is divided on back, front, and ends into 365 parts numbered from unity in each direction. In each groove slides a strip also divided into 365 parts and inscribed one, 13, with the month and days of the month, the other, 14, with the days of the week. To adapt the apparatus for all years, additional strips 23 are provided in a receptacle in the base, which strips are divided for seven week days and can be superposed on the week-day strip giving all the variations of the repeated week-day. They are held in position by fastenings such as pins 24. The edge of the base may be divided into measures of length.

© B O B Williams Printed22/11/2023 CalcPatents Ed. 1.doc

Kettlitz C 1429/1909 Adder

1429. Haddan, H. J., [*Kettlitz, C.*]. Jan. 20.

FIG.3.

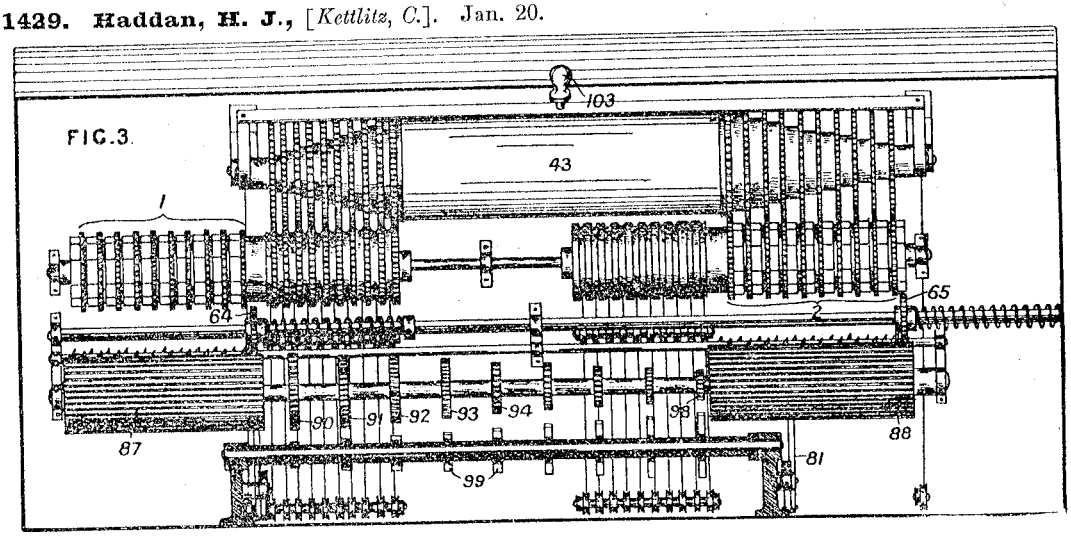

Adding-machines; keyboards; selecting denomination; varying functions of machine.—An apparatus for determining the amount required to balance an account comprises two series of key-operated numeral-wheels, upon which the totals of debit and credit items respectively can be set; by connecting corresponding wheels of the two series together by means of auxiliary toothed wheels, and then zeroizing the wheels of that series upon which the smaller total has been set, the other series show the balance required. The series of wheels 1, 2, Fig. 3, are operated by keys 78, Fig. 7, through hinged sectors 99 gearing with wheels 90 to 98, toothed drums 87, 88, and movable spring-controlled denomination-selecting wheels 64, 65. These wheels are controlled by a slide 82 which is moved so as to expose the the larger of the two totals through an aperture in the frame and at the same time allows only one of the denomination-selecting wheels to operate the corresponding series of numeral-wheels at a time; the other being held out of gear. An escapement-mechanism, permitting either of the wheels 64, 65 to actuate the numeral-wheel of each denomination in succession, is operated by the keys through a lever 80 and a link 81. As each numeral-wheel is set, a pulley mounted on the same sleeve rotates one of a series of pulleys 104 to a corresponding extent by means of a cord 107.

FIG.7.

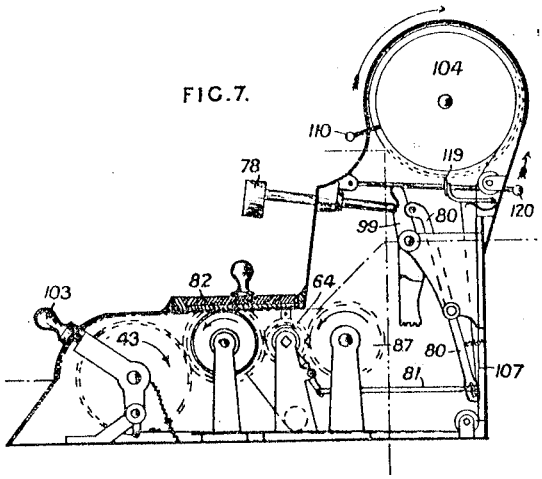

Zeroizing-mechanism.—The series of nested sleeves 43 mounted upon a pivoted frame 103 is next thrown backwards, so that the toothed wheels thereon gear with the corresponding wheels attached to the numeral-wheels, and the proper series is zeroized by depressing levers 110 attached to the pulleys 104, a bail 119 being automatically removed from ratchet-wheels attached to these pulleys. The bail can, if desired, be directly depressed by means of a lever 120.

Keuffel W 1433/1905 Multiplier Thomas type

1433. Keuffel, W. Jan. 24.

Calculating-apparatus. — In multiplying-machines of the type in which the multiplicand is set by means of slides on a fixed horizontal plate, and a traversing carriage containing the counting-wheels is placed in successive positions while an operating-handle is turned as many times as the multiplier digit corresponding to such position, the main shaft is motor-driven under the control of a key operating a clutch and detent, and the carriage is locked against movement except at the end of complete revolutions of this shaft. Fig. 1 shows in plan the fixed plate 10 with its sliders, and the carriage 21. The motor drives the shaft 50, Fig. 2, through a train of wheels 90 . . . 93, and, when the spring-held key 41 is depressed, the two clutch elements 54, 34 interlock and the detent 43 is carried out of a slot in the disk 32, the key and attached parts being mounted for the purpose on the pivots 40. The shaft 30 is thus coupled to the motor and drives the main shaft 120 by means of gearing 31. Bevel-gearing 124', 124 drives vertical spindles 84, 123 from this main shaft, and these carry cams 60, 82, with grooves 61, 83 engaging the pins upon sliding bolts 64, 80, which lock the carriage in registering positions save during a small portion of each revolution of the main shaft. If an electromotor is employed, the starting-key 41 may energize the motor, and this key is in any case held down until the proper number of revolutions has been made, as shown by the figures of the multiplier-counter 22.

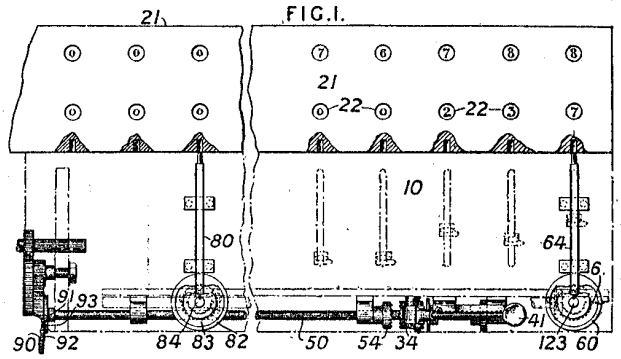

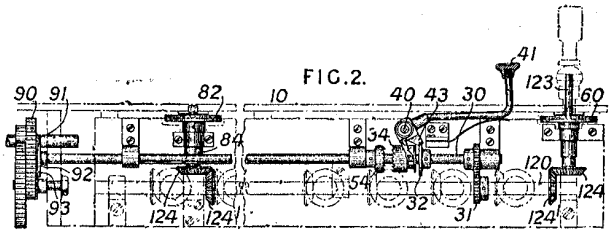

Keuffel & Esser 16939/1891 Slide rule

16,939. Allison, H. J., [*Keuffel & Esser Co.*]. Oct. 6.

Slide-rules.—The slide Z, between the two fixed bars w^1, w^2, connected at the ends by straps w^3, is graduated with the usual scales C, D on one side from left to right and on the other side from right to left, while the bars w^1, w^2 bear on both sides the scales A, B reading from left to right. Removal and reversal of the slide to obtain inverse readings is therefore unnecessary.

21

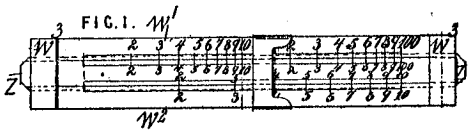

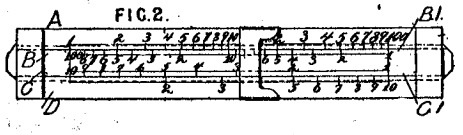

Kidd G W 111121 of 1916 Proportional for ship's log

111,121. Kidd, G. W. Aug. 24, 1916.

FIG.1.

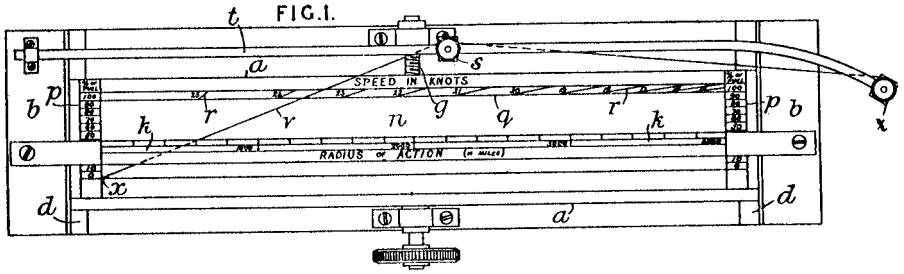

FIG.5.

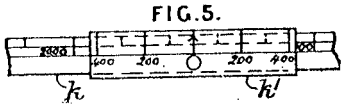

Computing-scales.—Apparatus of the proportional-calculator type, having a bar and scale capable of relative movement, are adapted for use on board ship to ascertain one of the three following quantities when two of them are known, viz., (1) percentage or amount of fuel remaining, (2) speed, (3) distance travelled or radius of action. The device comprises a frame *b* recessed at *d* to carry a sliding table *a* which may be reciprocated by a screw *g*. Mounted on the table is a scale card *n* having at each end an evenly divided scale *p* marked in percentages of fuel capacity and at the top edge a scale *q* representing speed in knots divided by lines radiating from a point *x* at the zero of the fuel-capacity scale. The graduations on the scale *q* are obtained from the speed consumption curve of the ship in conjunction with an evenly divided scale *k* secured to the frame and showing the radius of action. The table is adjusted to bring the 100 per cent. line level with the scale *k*, and radiating lines *r* are marked on the scale *q* opposite the readings on the scale *k* showing the radius of action at the speed corresponding to the graduations on the scale *q*. Pivoted at the point *x* is a straight edge or, alternatively, an elastic or other cord *v* is secured thereto and passes over a pulley carried by a block *s* sliding on a bar and provided with a clamping-screw. In the case of an inelastic thread, the thread is passed round a pulley on the block *s* and is secured to a spring barrel carried by an adjustable block *z* mounted on an arm sliding on a rod *t* secured to the block *s*. A transparent sliding scale k^1, Fig. 5, is mounted on the scale *k* to facilitate addition and subtraction. In operation, the table is adjusted to bring the figure representing the percentage coal capacity against the scale *k*, the cord is adjusted to the speed reading on the scale *q*, and the radius of action can then be determined from the intersection of the cord *v* with the scale *k*.

Kimpton T C 2882/1863 Tabular device

2882. Kimpton, T. C. Nov. 18.

Calendars; calculating-apparatus.—Relates to arrangements applied to clock stands, pedestals for ornaments or statuary, inkstands, writing and dressing cases, and other useful and ornamental objects for readily ascertaining dates, fares, or distances &c. by means of tables of figures or letters of the nature of calendars, arithmetical calculating-tables, &c. In one arrangement, apparently for use as a calendar, the figures, letters, or words are marked on the peripheries of loose wheels E, Fig. 1, which rest on central wheels or supports D strung on a pivot C projecting from a base A and provided with a cap-plate B. The apparatus may be placed vertically, as shown, or horizontally, and is placed in a cylindrical or other case having openings through which any required figures &c. may be displayed. The wheels E, in a modification, are all of different internal diameter, and rest on a stepped cone which also supports within and between the wheels E a second series of smaller wheels. The wheels E may also be replaced by movable bands placed on a hollow drum between circumferential ridges formed on it. According to the Provisional Specification, the wheels E may be revolved by means of a key or handle acting on vertical toothed wheels in gear with toothed wheels attached to them. The outer case A^1, Fig. 8, may support at its upper part an ink well F^1, and may have a tray and letter balance L attached to it near the base by a bayonet &c. joint. The figures &c. on the bands B^1 in this case show the date &c. through openings G^1 in the case A^1. Addition or subtraction sums are stated to be calculated by means of a fixed or stationary set K^2 of figures and a second set on a band which moves under an opening K^1 near the base; pins or openings for pins are provided for moving this band round in either direction according to the kind of sum to be performed. The outer case of the apparatus may be used as a clock stand, a stand for ornaments, or, according to the Provisional Specification, as a match box. In the calculating-apparatus shown in Figs. 10 and 12, the revoluble wheels L^3 are flush with one another, and are marked with figures on their upper faces, such figures being exposed through openings M^2 in the cover M^1. Addition and subtraction sums are performed by means of a series of figures on a fixed projecting ring N^2 on the cover M^1 and a similar series on a loose ring N^1, which is movable in a rabbet in the edge of the cover M^1; the movable ring may be enclosed by a case having an inspection opening. Seven discs S^1 arranged under the cover M^1 and revoluble by means of knobs on the axles carry radial columns of figures, any of which can be brought under openings O^2 beside columns O^1 of figures on the cover. These figures are used in performing sums in multiplication, division, and cubic measure. Wheels R^1, marked with figures from 0 to 10 and carried loosely on an axle under the cover, are also applied to this apparatus. The wheels L^3 may be replaced by annular strips lying in circular recesses in a suitable base. The cover M^1 may be modified to admit of the use of one large disc in place of the discs S^1 described above. The cover and disc are in this case marked with figures in circles, those on the cover lying over the blank annular spaces between the circles of figures on the disc. In another arrangement, the cover is replaced by a vertical case or cylinder having a vertical row of figures marked on it beside a vertical opening through which figures on a vertical rotatable drum within the case may be exposed. Several apparatus of this kind may be attached to a horizontal disc.

FIG. 1.

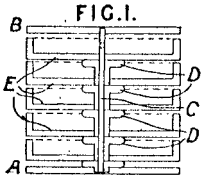

FIG. 8.

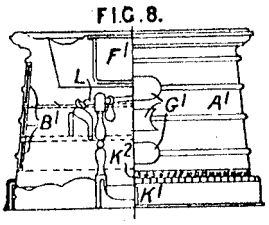

FIG. 10.

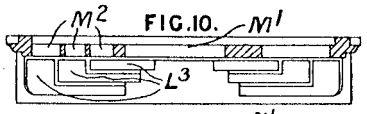

FIG. 12.

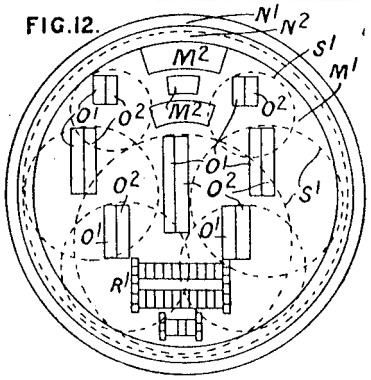

© B O B Williams Printed22/11/2023 CalcPatents Ed. 1.doc

the base ; pins or openings for pins are provided for moving this band round in either direction according to the kind of sum to be performed. The outer case of the apparatus may be used as a clock stand, a stand for ornaments, or, according to the Provisional Specification, as a match box. In the calculating-apparatus shown in Figs. 10 and 12, the revoluble wheels L^3 are flush with one another, and are marked with figures on their upper faces, such figures being exposed through openings M^2 in the cover M^1. Addition and subtraction sums are performed by means of a series of figures on a fixed projecting ring N^2 on the cover M^1 and a similar series on a loose ring N^1, which is movable in a rabbet in the edge of the cover M^1; the movable ring may be enclosed by a case having an inspection opening. Seven discs S^1 arranged under the cover M^1 and revoluble by means of knobs on the axles carry

FIG.10.

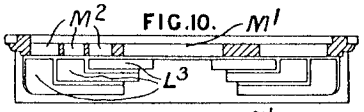

FIG.12.

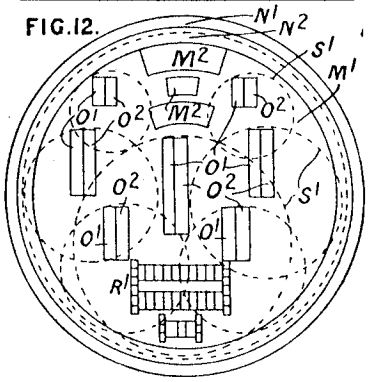

radial columns of figures, any of which can be brought under openings O^2 beside columns O^1 of figures on the cover. These figures are used in performing sums in multiplication, division, and cubic measure. Wheels R^1, marked with figures from 0 to 10 and carried loosely on an axle under the cover, are also applied to this apparatus. The wheels L^3 may be replaced by annular strips lying in circular recesses in a suitable base. The cover M^1 may be modified to admit of the use of one large disc in place of the discs S^1 described above. The cover and disc are in this case marked with figures in circles, those on the cover lying over the blank annular spaces between the circles of figures on the disc. In another arrangement, the cover is replaced by a vertical case or cylinder having a vertical row of figures marked on it beside a vertical opening through which figures on a vertical rotatable drum within the case may be exposed. Several apparatus of this kind may be attached to a horizontal disc.

King, Otis 207762 of 1922 Helical slide rule

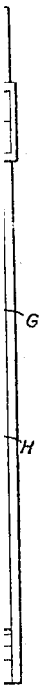

207,762. King, O. C. F. Sept. 4, 1922.

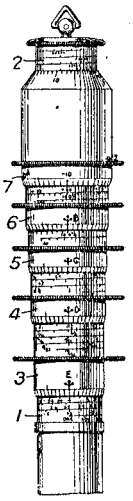

Slide-rules. — In instruments comprising a pair of telescopic graduated drums 1, 2 and a surrounding cursor such as described in Specification 183,723, a number of nested cursors 3, 4, 5, 6, 7 are employed each (except 7) being provided with a helical logarithmic scale and an index. The device is illustrated as graduated for determining the cubic content of timber from the linear scales on the members 1, 3 and 4, allawances for shrinkage and trimming being interpolated by means of the scales on the cursors 5 and 6. The fiducial edges of the cursors may be graduated to allow percentage variations to be read or set. The first Provisional Specification describes a form of instrument wherein the cursor (or cursors) is fixed and the drums 1, 2 which may be replaceable by other drums are slidably mounted on a rod passing diametrically through and fixed to it. The second Provisional Specification states also that the cursors may bear additional fiducial marks displaced axially or circumferentially with respect to the primary mark.

See **[22]**

Kirby E B 1979/1898 Keyboard

1979. Boult, A. J., [*Kirby, E. B.*]. Jan. 25.

Calculating-apparatus.—Relates to the keyboard and associated mechanism for operating typewriting, calculating, &c. machines. Fig. 1 represents a plan, and Fig. 2 a sectional elevation. The keys are arranged in three sets A, B, C for the right hand, which may be duplicated for the left hand as shown by the additional three sets A^1, B^1, C^1. The latter sets operate the same mechanism as the right-hand sets, so that either hand may be used. The five keys 1^a, 2^a, 3^a, 4^a, 5^a, &c. of each set are in position to be operated by the thumb and fingers of the hand, and by moving the hand backward and forward any of the three sets may be conveniently operated. Extending

105

transversely below the levers G which actuate the type-writer &c. mechanism, is a series of eight notched or recessed bars *a* mounted to slide longitudinally side by side and returned to normal position by springs I. When one or more of the bars *a* are moved longitudinally, so that a series of notches is brought into line under one of the levers G, the latter is drawn down by a spring into the line of notches or recesses formed. Five of the bars *a* are operated by each series of keys, and an additional bar is operated by each of the two series A, A^1 and C, C^1, so that, by the use of the three series of keys and the operation of one or more keys in any series, a large number of levers C may be operated. The keys operate rock shafts D having arms engaging projections on the lower edges of the bars *a*. The key stems are provided with springs b^9 for raising them, and with adjusting-nuts b^8. In the arrangement shown in Fig. 2, the levers G are pivoted at g^3 and their vertical arms g^4 are provided with projections g^8 engaging push-rods M pivoted at their lower ends to the levers O, which are connected to and operate the parts of the type-writer &c. When a rod M is swung by a lever G, its upper notched end m^9 comes beneath a striking-bar K, which is then depressed by suitable power mechanism—in the case shown, an electromagnet R, Fig. 1. The incline m^2 on the push-rod M returns the lever G to its raised position. The bar K is connected by rods k^1 to a lever frame T, pivoted at *t*, operated by a rod p^3 and arm p^2 of the shaft P. On the shaft P is an arm engaging a slot in the plunger of the electromagnet, the circuit of which is closed by contact on a lever operated by a lever frame actuated by adjustable screw points on the lower ends of the arms g^4 of the levers G. The contact is broken by a nut, on the extension r^2 of the plunger, which engages an arm of the pawl lever. The eighth bar *a* is termed a lock bar and is moved by a pawl on a swinging lever actuated by notches on all the other seven bars *a*. Connected to the pawl is a rod connected to a trip lever engaged by the lever frame T, and when the latter is depressed the pawl is disengaged from the lock bar *a* and allows it to spring back to normal position. A second depression of the lever G is thereby prevented, if a key is held down. In case of machines having shift mechanism, the levers G may be arranged in pairs operating the same push-rod M, one lever of each pair having also a projection engaging a pivoted frame which throws another push-rod under the striking-bar K. The latter push-rod operates the shift mechanism.

FIG. 1.

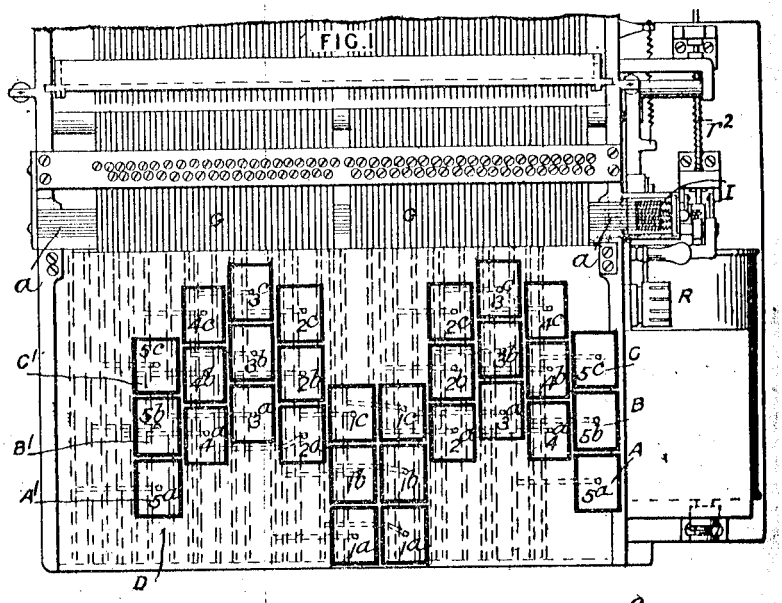

FIG. 2.

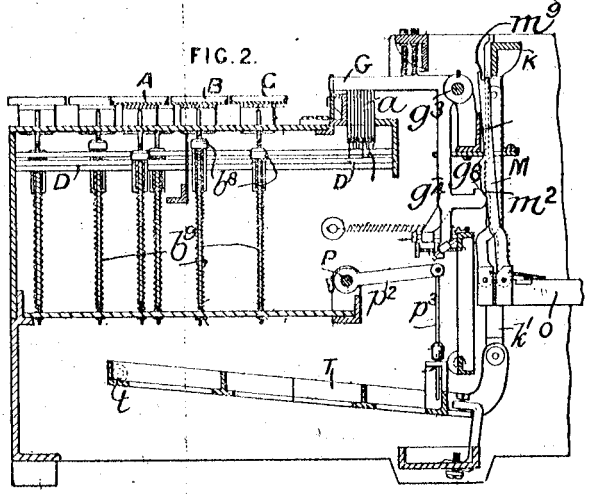

© B O B Williams Printed22/11/2023 CalcPatents Ed. 1.doc

Kirby E B 1980/1898 Keyboard

1980. Boult, A. J., [*Kirby, E B.*]. Jan. 25.

Calculating - apparatus. — Relates to keyboard &c. mechanism such as described in Specification No. 1979, A.D. 1898. The keys A, rock shafts D, sliding notched bars *a*, and letter bars G are substantially the same as in the preceding Specification, as also are the levers O and push-rods M operated by the striking-bar K. The push-rods M are operated by projections on the arms e^1 of the three-armed levers E pivoted at *e*. The arms e^1 are engaged by projections g^4 on the letter bars G, and, when one of the latter falls into a line of recesses in the bars *a*, it releases the lever e^1, E, which is then moved by its spring e^6. The arms e^2 of the levers E operate the trigger bar F, and the arms e^3 engage arms g^3 of the bars G to lift the latter to normal position. The striking-bar K is carried by a frame *k*, k^1, k^4. The frame is depressed, when released, by a spring T, and its movements are limited by two buffers k^6, k^7 which engage the bar k^4 of the frame. The latter is raised by means of four wipers *n* on a toothed disc N on the power shaft S. The disc N is held by a pawl P until the striker frame has nearly completed its stroke, when it is released and turns until one of the wipers has raised the striker frame. The pawl P is pivoted on a lever p^4, p^6 operated by a screw point k^9 on the striker frame and by a spring p^3. The striker frame is normally held by a pawl U which is operated to release the striking-bar by means of a spring arm W projecting from the trigger bar F. The spring W engages a pawl *r* which engages and holds a lever u^2 which moves the pawl. The arm u^1 of the lever u^2 is operated by a cam-piece k^{10} on the striking-frame, to return it to normal position, so that the pawl U may engage the bar K when it reaches its highest point. When the apparatus is for use with a type-writer &c. having a shift mechanism, the spring T is made sufficiently strong to actuate the shaft mechanism and lever O, and an arrangement is provided to counteract the excessive force of the spring when the shift mechanism is operated. This consists of a bar Y the upper end of which engages under the striker-bar K. The lower end of the bar Y is connected at y^8 to an arm y^2 pivoted at y^3 and held by a spring y^7. When the bar Y moves downwardly it moves the arm y^2 against the pressure of the spring y^7. The push-rod M, which acts when the shift mechanism is to be operated, has a projection m^3 which moves the upper end of the bar Y out of engagement with the bar K.

FIG. 2.

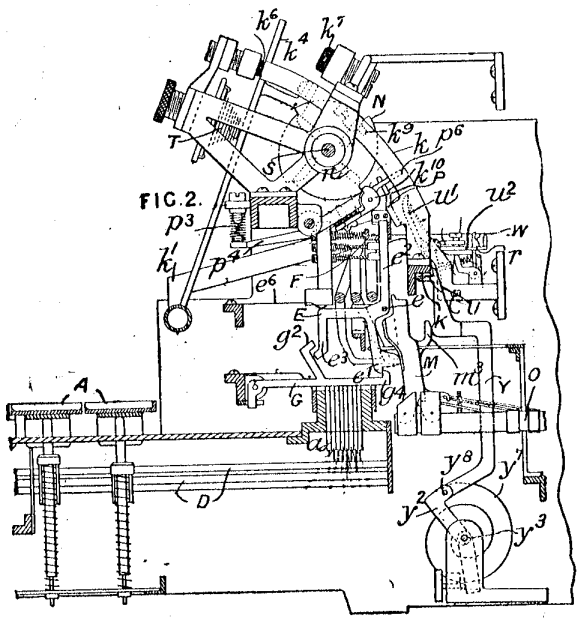

© B O B Williams Printed22/11/2023 CalcPatents Ed. 1.doc

Kirby E B 3541/1900 Keyboard mechanism

3541. Boult, A. J., [*Kirby, E. B.*]. Feb. 22.

Calculating-apparatus.—Relates to keyboard mechanism for operating machines such as type-writers, stenographic machines, matrix-making machines, type-setting machines, calculating-machines, &c. The invention consists of improvements in the mechanism described in Specifications, Nos. 1979 and 1980 A.D. 1898. The depression of any definite combination of keys causes the longitudinal movement of one or more of seven notched combination-bars F, Fig. 2, so as to bring some definite series of notches into alignment beneath one of the letter-bars G, which is immediately lowered into the recess so formed by the pressure of the spring G^1. The three-armed lever J moving under the tension of the spring J^1 throws forward the universal bar H, and the rod h connected therewith releases the latch h^1 so as to permit the spring h^4 to withdraw the detent L from the striking-bar K by its pressure on the arm h^2. The bar K is now free to descend under the tension of the spring I, and it abuts against a rod M^1 which has been pushed backward by the movement of the lever J, and so actuates the key-lever M of the type-writer or other machine with which the mechanism is combined. During the descent of the bar K and its supporting frame k the cam-bar k^3 returns the bar h^2 and latch h^1 to the normal position, and the cam m^2 on the descending rod M^1 forces the lever J forward so as to raise the letter-bar G from the aligned notches. A stop k^4 finally engages an arm n so as to release the pawl N from the detent-wheel O and allow the power-shaft o to

take a partial revolution, during which one of the wiper-arms o^1 raises the frame k and bar K to be normal position. A buffer-rod Y is employed as described in the above-mentioned Specification o prevent the bar K from descending with its full force unless it is engaged in actuating one of be shift-keys of the machine. The keyboard consists, as shown in plan in Fig. 1, of four banks A, B, C, D, each containing five keys a^1, a^2 &c., which are duplicated so that the operator's hands

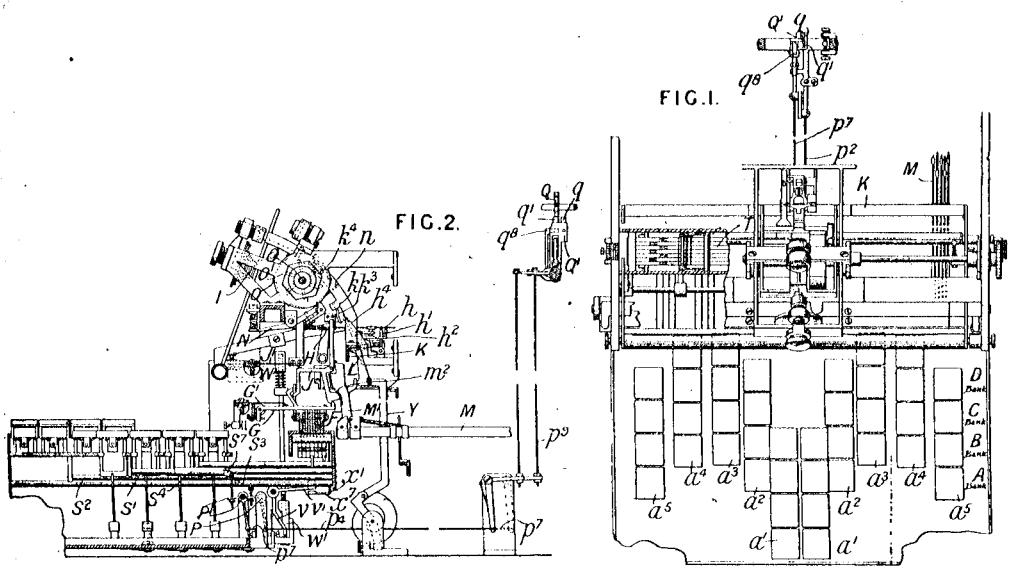

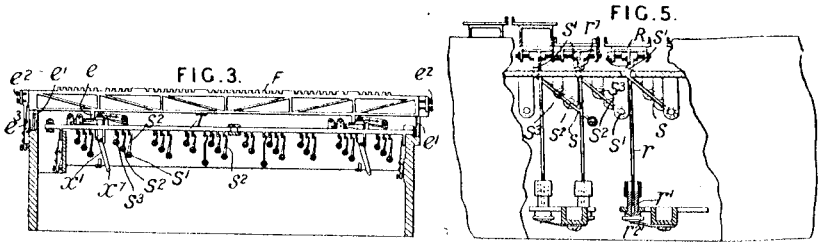

may be employed alternately. The A-bank is employed for capital letters, the B-bank for lower-case letters and punctuation marks, the C-bank for the same characters when followed by a space, and the D-bank for figures and less usual characters. The keys are provided with a special trigger-like action shown in Fig. 5. Beneath each key is a flanged plate R, from which depends a forked stem r screwed into the plug r^1, which has a certain limited range of vertical movement under control of a spring r^2. The rock-shafts S^1, S^2, S^3, &c. one of which is operated by each key, are provided with arms s terminating in bevelled heads s^1, which escape from beneath the blocks r^7 when the keys have been partly depressed, so that the key finally descends idly against the control of the spring r^2. Fig. 3 shows one of the notched combination-bars F, which are made in trussed form and rest on struts e^1. End stops e^3 limit their longitudinal movement, and springs e^3 urge them continually towards the right. Beneath each combination bar is a pair of "ratchet-bars" T, one for each division of the keyboard. The ratchet-bars are moved towards the left by arms s^2 secured to the rock-shafts S^1, S^2, S^3, &c., and carry the combination-bars with them, but the pawls U are released from the co-acting lugs e during the descent of the striking-bar K so that the combination-bars immediately resume their normal position, even though the keys may be more slowly released. This is effected by the depression of a rod W, Fig. 2, terminating in a cam-surface w^1 which operates a lever v, v^1 so as to draw down a frame x^7, x^1 connected to the pawl U. When a letter is printed by the type-writer the carriage escapement is operated in the usual manner. The thumb-keys, however, of all four banks are adapted to directly actuate the escapement, and thus serve as spacing-keys. Each rock-shaft actuated by a thumb-key bears an arm s^3, Fig. 2, linked to a bell-crank lever P so as to draw forward a rod p^3 and depress a rod p^4 operating the rocking-frame Q^1 which bears the escapement-dogs q, q^1. When a key belonging to the C-bank is depressed, the letter printed is to be followed by a space, so that twice the normal carriage-feed is necessary. This is effected in the following manner:—The keys of the C-bank do not directly actuate special rock-shafts S^1, S^2, &c. in the manner of the other keys, but operate sleeves S^4, Fig. 2, loosely mounted

© B O B Williams Printed22/11/2023 CalcPatents Ed. 1.doc

Kirby S R 14207/1898 Great circle navigator

14,207. Kirby, S. R. June 27.

FIG.1.

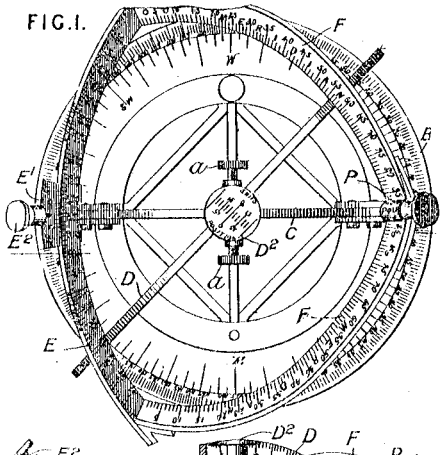

FIG.2.

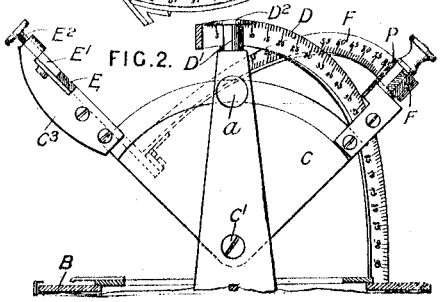

Calculating-apparatus.—The instrument is for indicating the course to be steered in great circle sailing, and shows incidentally the angular distance between the starting point and destination, from which the number of knots can at once be obtained. A meridian plane C, pivoted at C^1, carries a pivot P which represents the pole and is adapted for the latitude of the starting-place and clamped by screws *a*. About P turns the frame F, F, E, the arcs F, F being meridians and E the equator; E slides in a groove in an extension C^3 of the plane C, and can be finely adjusted and clamped by the vernier E^1 and screw E^2. D is a vertical circle turning about the zenith pivot D^1, having a vernier head D^2, and B is the horizon circle, graduated in degrees and compass points, which may be adjusted according to the magnetic meridian of the place. The graduated edges or all the arcs (except B) are portions of great circles, and so move in contact with each other. If, now, the equator E be set to read the difference of longitude between the two places, and the vertical circle D

149

Kjellstrom J 5060/1894 Tape measure weight calculator animal

5060. Kjellström, J. March 10. *Drawings to Specification.*

Measures of length, calculating weights by. Upon a measuring tape the length and girth of an animal are determined, and the girth added to half the length forms a measure of the weight of the animal upon an arbitrary scale marked upon the tape. In a modified arrangement, another function of the girth and length is used as a measure of the weight of the animal.

Kleeberg P 12963/1913 Tab calc, Roller

12,963. Kleeberg, P. June 4.

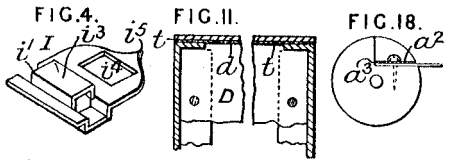

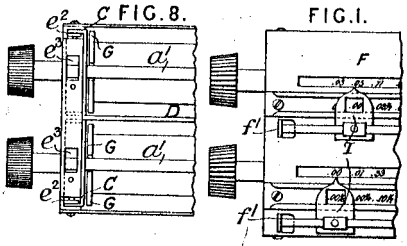

Tubular calculators.—Relates to apparatus of the kind described in Specification 3611/12, and consists in a construction of parts such that sets of tables can be combined into any size of apparatus desired. A chart unit comprises the sheet with the tables on it, with its two rollers geared together by a pinion, all supported in a pair of end plates C, Fig. 8, which also carry a roller a^1 for guiding the sheet below the sight aperture. Plates G are mounted loosely at the ends of the rollers to keep the sheet in position. Such units can be mounted separately in a single casing or joined together with partition plates and assembled in casings for the various multiples, the end plates having apertures e^2 for the insertion of tools when assembling, and openings e^3 to facilitate lubrication. The partition plates D have a projecting edge d to keep in position transparent plates t, which cover the sight openings. The face-plates F have turned-up tongues f^1 to carry the guide rods for the sliding indicators I, which are stamped out from sheet-metal with a guiding-sleeve i^1, Fig. 4, sight-hole i^4, and pointer i^5. A stud i^3 stamped on the sleeve facilitates manipulation. The sheet is attached to the rollers by inserting it in a groove a, Fig. 18, with a reinforcing-strip a^2, and securing with a tack at each end in a recess.

Kluge A 10985/1902 Adder

10,985. Kluge, A. May 13.

Calculating-apparatus.—One set of keys from 0 to 9 act on any desired adding-wheel. The ratchet levers of the adding-wheels *c* on a common shaft *b* are connected by coupling bars *f* to loose arms *s* on a parallel shaft *r*, and any one of the arms can be linked, by a hook *t* pivoted upon it, to a corresponding arm *z* on another shaft *p*. Each key *l* strikes one of nine arms *q* set spirally on the last-mentioned shaft, and at the limit of its stroke also makes a treadle *h* apply a stop c^2 to the adding-wheel to prevent overdriving. An indicating-wheel *w* shows the digit added. In carrying, a pin g^1 on the units wheel wipes a bell crank *g* which operates the coupling-rod *f* of the tens wheel.

FIG. 2.

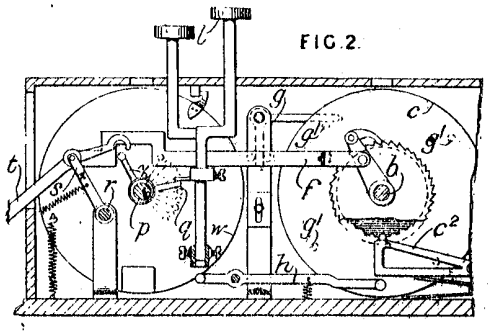

Koechlin A 835/1896 World time discs

835. Thompson, W. P., [*Koechlin, A.*]. Jan. 13.

Calculating-apparatus.—For comparing times on different meridians. Within a dial ring C showing the twenty-four hours with subdivisions and attached to a disc there is a rotary disc D which represents the equatorial plane of the world with the principal cities orthogonally projected on it, those of the northern hemisphere being represented by dots and those of the southern by eyes. Instead of this apparatus a slide-rule arrangement may be substituted.

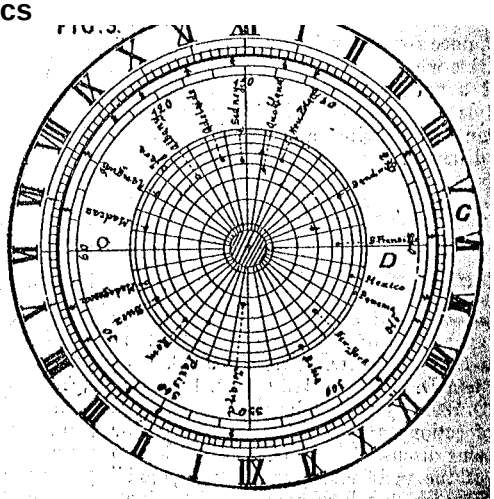

Knecht B 23304/1912 M & D

23,304. Knecht, B. Oct. 14, 1911, [*Convention date*].

FIG.1.

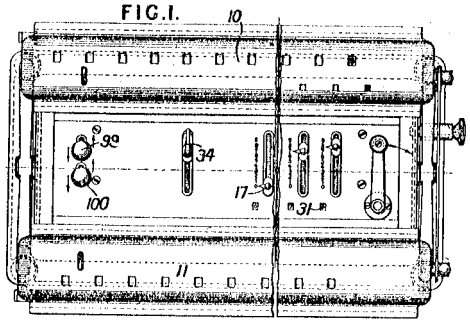

FIG.3.

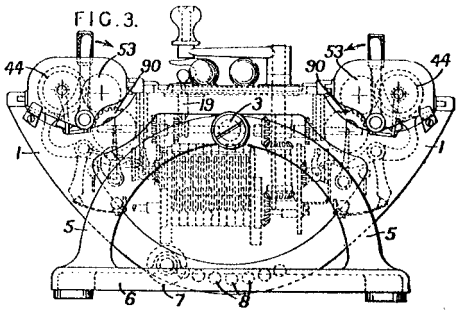

FIG.17.

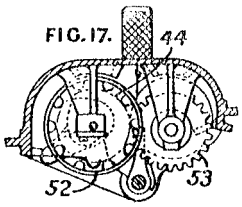

FIG.4.

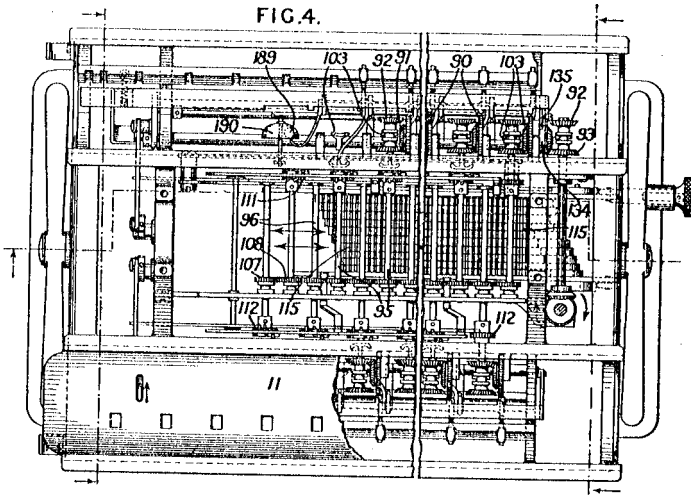

FIG.29. FIG.30. FIG.31.

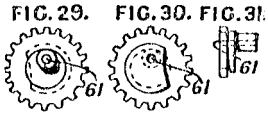

Multiplying and dividing apparatus; transfer mechanism; zeroizing-mechanism.—In apparatus provided with two laterally-movable counting-mechanisms, the whole apparatus is pivotally mounted on trunnions 3 in a frame 5, 6, Fig. 3, and can be adjusted in position by a pin 7 and perforations 8 in the pivoted frame 1. (1) A single series of manually-operated setting-slides is adapted to position pairs of adjustable receiving-wheels, one wheel of each pair co-operating with one counter, while the other co-operates with the second counter; (2) the actuating-racks are mounted on a carriage which is raised by a cam to enable them to engage the adjustable receiving-wheels, and are reciprocated at speeds respectively proportional to the values to be transmitted to the receiving-wheels; all these movements being due to the normal movement of a single operating-handle; (3) the counters are mounted on laterally-movable slides, which are not pivoted, and can be moved in the usual way to enable multiplication to be performed by successive multiples of 10; (4) various locking and detent mechanisms are provided. (5) Transfer and (6) zeroizing means are also described, together with means for (7) erasing and setting, (8) reversing

FIG.5.

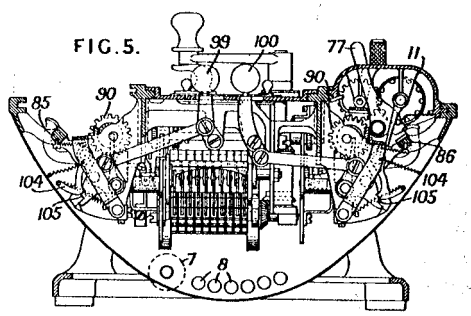

FIG.7

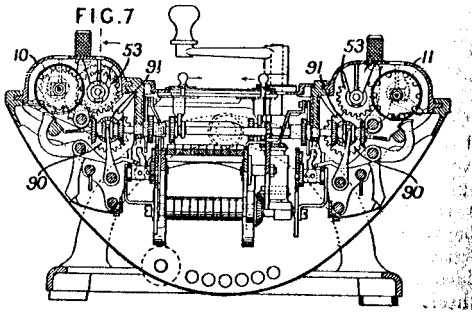

Koenigsberger K 4724/1878 ASMD

4724. Wirth, F., [*Königsberger, K.*]. Nov. 20.

Calculating-apparatus for adding, subtracting, multiplying, and dividing. The shaft B has its bearings in the ends of the case A and is rotated by a crank. To it are firmly attached a series of

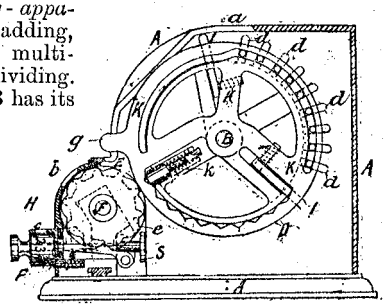

61

wheels D, one third of the periphery of each of which has radial recesses in which slide nine teeth *d*,—one or more of which may be caused to project by turning the cam plate K provided with a lug *g* and spring stop *k*. A number exhibited at the aperture *a* on the edge of the wheel indicates the number of teeth projecting on that wheel. These teeth at every revolution of the crank axle engage with smaller toothed wheels *e* which are rigidly connected with the recording-wheels E seen through apertures *b*. Between each two of the counting-wheels D is a pivoted movable tooth I for effecting the operation of "carrying ten." This tooth is caused to project and engage the adjacent wheel to move it forward one unit by means of a slide slotted over the shaft F and operated by a projection on the inner periphery of the wheel E. The recording-wheels E with the casing H can be shifted longtitudinally to alter the position of the decimal point; and all can be rotated to the zero position by turning the shaft F which engages them by means of projecting lugs. Small cylinders are used to indicate through the apertures *c* the number of revolutions up to nine made by each of the counting and setting wheels D, K, and also for indicating the quotient in division. They are operated by ratchets S, each worked by a pawl oscillated by a cam fixed on the shaft B. They may be rotated back to zero separately by milled heads or altogether by means of a sliding rack bar operating toothed segmental wheels.

Krause R 7571/1902 Slide rule & nonius

7571. Krause, R. March 29.

Slide-rules.—Consists of a base 1 and a slide 2, both graduated to 1000, and of a nonius 3 for reading both. A larger instrument has two sets of graduations on both members, 0 to 5000 on one edge and 5000 to 10,000 on the other.

FIG. 1.

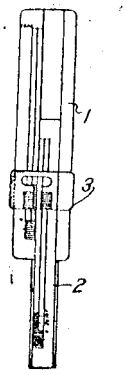

Kreutzfeldt R T 17111/1907 Calc Beams, girders etc

17,111. Kreutzfeldt, R. T. July 26.

Calculating - apparatus. — An adjustable instrument for calculating the sections and sizes of beams, plate girders, and the like of known strengths that should be used for certain purposes is shown in the Figure. Upon a suitable base a, a curve a^3 is struck with a^2 as centre; on this curve is marked a graduated scale a^4 representing the loads in kilo., the graduations bearing a certain fixed relation to each other. Between the curve a^3 and the centre a^2, a number of curves c are drawn on the base a to represent the tabulated girders of known strengths, the curve 55 corresponding to the tabulated girder No. 55. A semicircular sector d, pivoted at the base a at the centre a^2, has marked upon it the radial span scales d^2 in metres, and also the working stresses d^3, the scale d^3 being calculated in connexion with the particular working stresses which include the different factors of safety. The sector d is provided with openings d^5 through which the curves c can be easily read. For a particular load, the arrow of the given working stress is placed against the load and the number of the curve c is read off at the point of the known span. The dimensions of the girder are then obtained from the tables.

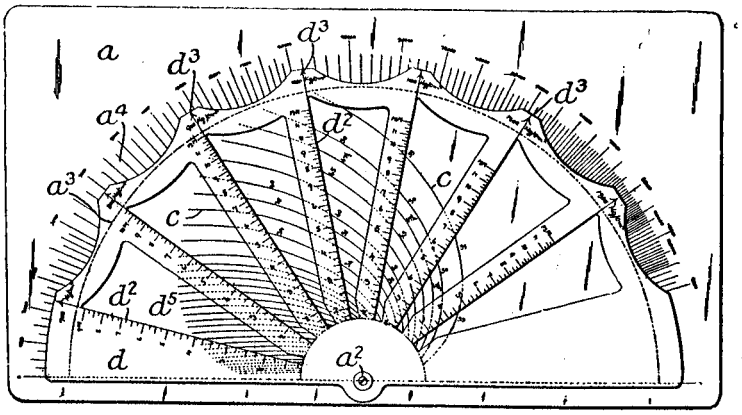

Krog F A 2064/1914 Tab calc on bands for wages

2064. Krog, F. A. Aug. 20, 1913, [*Convention date*].

Tabular calculators.—A flexible sheet of material *e* may be wound to and from rollers *d* by means of gearing connecting them with a handle *f*. The sheet bears computed wages visible through a reading-slot *b* in the casing

54

containing the apparatus; the movable argument, upon the sheet, consisting of the number of hours in the working week, is displayed at the right-hand end of the reading-slot. Along

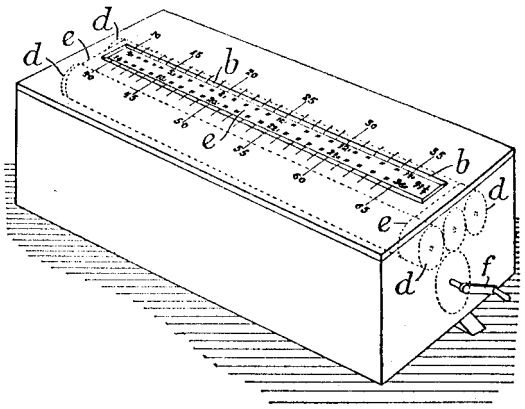

both edges of the slot are marked the second arguments, namely, the rates in pence per hour, one half upon each edge; and the computed wages corresponding to any number of work-hours are in two adjacent lines, as shown, both visible simultaneously in the slot and corresponding to the two graduated edges respectively.

Kruger G 13084/1910 Abacus

13,084. Krüger, G. June 2, 1909, [*Convention date*].

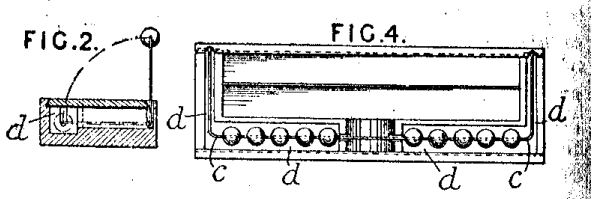

Abacuses. — A pencil box is fitted with an abacus consisting of a wire stirrup *c* carrying the balls and pivoted at the ends so as to lie, when not required, in a recess *d* in the box. For use, the abacus is turned up and held fixed by sliding the lid into position. The recess *d* is shaped so as to prevent the balls from rattling.

Krupp AG 15615/1913 Artillery calc

15,615. Krupp Akt.-Ges., F. Aug. 10, 1912, [*Convention date*].

FIG.2.

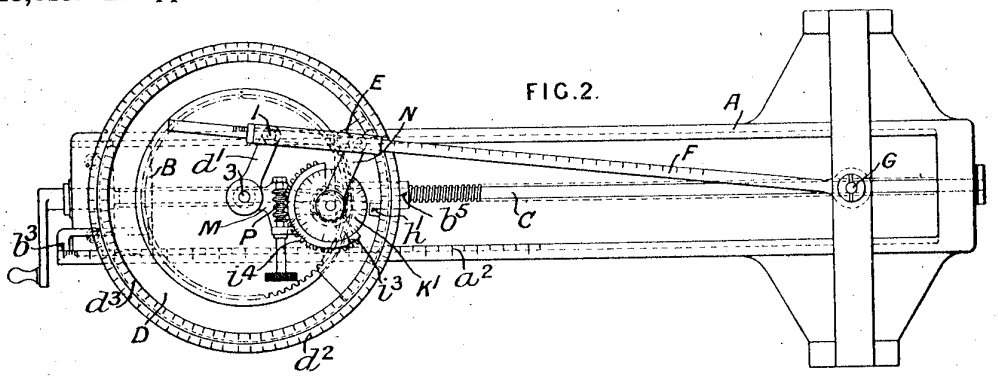

Plane-trigonometry calculators. — Relates to mechanical triangles for determining the range and bearing of the target when laying stationary guns indirectly. According to the invention, the target is represented by a fixed point G in the apparatus, which is used at the gun-station, and the points 1, 3, which represent the gun and observation stations respectively, and bear a fixed relation to each other, are carried by a slide B. The position of the slide is adjusted in the frame A by a screw C until a reader b^3 on the slide indicates on a scale a^2, the zero of which is at the end adjacent to the point G, the distance of the observation station from the target. The bearing of the target relatively to the direction 1-3 is set by rotating a graduated disk D, carrying an arm d^1 connecting the points 1, 3, until the bearing-angle is read on the scale d^2 on the disk D by a reader b^5 on the slide B. An arm M is freely pivoted at the point 3 and is connected by an arm N to a sleeve E slidable upon the gun-target range scale F, the zero of which scale is at the point G. The members M, N, E, d^1 constitute a jointed parallelogram, the arm M of which is parallel to the gun-target direction.

689

2 x

Kun & Halphen 19101/1904 Adder printer

19,101. Kun, M., and **Halphen, G.** Sept. 5.

Calculating-apparatus; counting-apparatus.—In a recording adding-machine with one bank of number keys, resembling a typewriter, there is one set of counting-wheels, with zero-setting and transferring mechanisms, and the traversing paper-carriage determines, by its position, the denomination of the counting-wheel to be actuated. There are three rows of keys, including (1) the spacing-keys 1, Fig. 2, for bringing the carriage at once into the position to record and register a figure of given denomination, (2) the numeral keys P which print a figure and actuate the counting-wheels 15 differentially, and (3) the summing-keys A for the various denominations, which are brought by their respective counting-wheels over the bridge-bar 22 corresponding to the digit recorded by the wheel at the instant. There are no numerals visible on the wheels, but the total is obtained in print by pressing all the summing-keys in succession. Depression of a spacing-key 1 lifts the bar 3 and rack 4 to a height determined by the length of the hook 9, rotates the spur-wheels 5, 7, Fig. 3, and traverses the carriage 6 by means of its rack to the required extent. If it be set to the thousands, the thousands bar 11 will

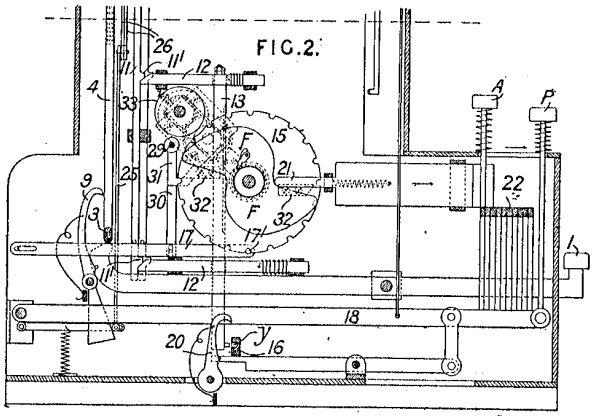

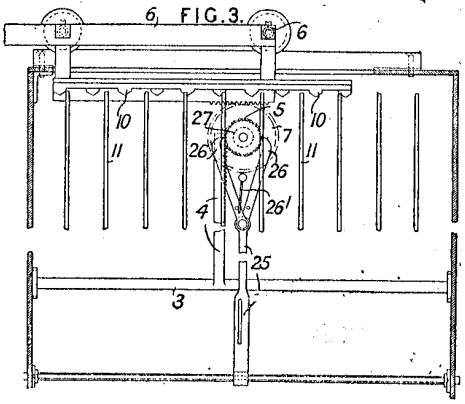

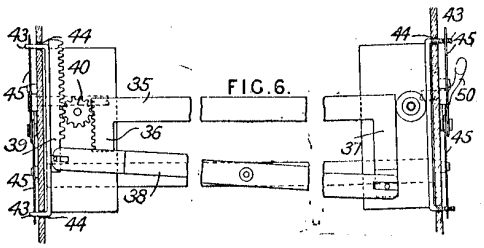

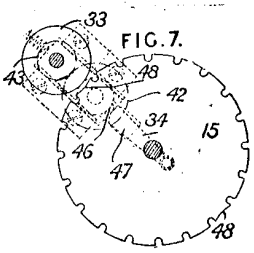

601

Kuttner W 621/1895 Mult. Machine

621. Kuttner, W. Jan. 10.

Calculating apparatus. — The apparatus is more especially for multiplication and division. A number of actuating wheels A^1 are employed from the edge of which any required number of teeth a^1 from 0 to 9 may be made to project by turning a fixed disc B having a cam-slot b engaging pins on the teeth. The discs are turned by a knob b^2 projecting through a slot b^3 in the casing, along the edge of which the numbers 0 to 9 are marked. In this manner the multiplicand or divisor is set out. All the wheels A^1 and an additional set which are for the purpose of "carrying" only when the high numbers are being dealt with, are keyed to the shaft w. A hand operated spring detent is provided to engage a notch in the last wheel in order to hold the shaft w rigidly in the requisite position while the teeth a^1 are being set. The shaft w is fitted with a crank handle by which it may be turned according to the digits of the multiplier &c. As the shaft revolves, the teeth a^1 engage with ten-toothed pinions d loose on a shaft w^1 and rigidly connected to numbering drums d^2 showing through slots d^4. This register, and the lower one to be subsequently described, are mounted in a casing S which is pivoted on a shaft W^1 so that they can be turned back out of gear and slid along the shaft to multiply by the digits which represent tens, hundreds, thousands, &c. In order to prevent over-driving, a pawl e (see especially Fig. 15) is held in gear with crown wheel d^3 on the numbering drum by a pin pressing against the face of the wheel A^1 except when the teeth a^1 are in action; then the pin slips into the vacant space and allows the drum to turn. Two "carrying" teeth I, I on each wheel are brought into gearing position or thrown out of it (as shown respectively at the top and bottom of the wheel A^1, Fig. 3) by pivoted cams on the standards H. The cam is pushed into such a position by a pin g on the next wheel when it is about to change from 9 to 0, or *vice versâ*, that the pin l^1 on the tooth I is thrust back as it passes and the tooth is erected into position. A pin A^3 restores the cam to the normal position in which it encounters the pin l^2 and throws the tooth I back again. Two teeth are necessary to allow for both multiplication and division, the shaft w being turned in opposite directions in the two operations. The number of times the machine is actuated in each position is recorded on drums operated by a series of wheels r, o, the latter receiving movement from the carrying teeth of the wheels forming the set beyond A^1. Thus after a multiplication, the multiplier will appear in the slot S^1. Two sets of figures running in opposite directions are marked on the drums to allow for recording in both multiplication and division, but one of the sets is always concealed by an adjustable shutter. To readily zeroise the recording drums, each shaft w^1, w^2 is provided with a sliding feather carrying a series of pins. The feathers may be slid longitudinally and the shafts turned by milled heads and the pins then engage with pins within the recording drums and carry them back to zero.

FIG. 1.

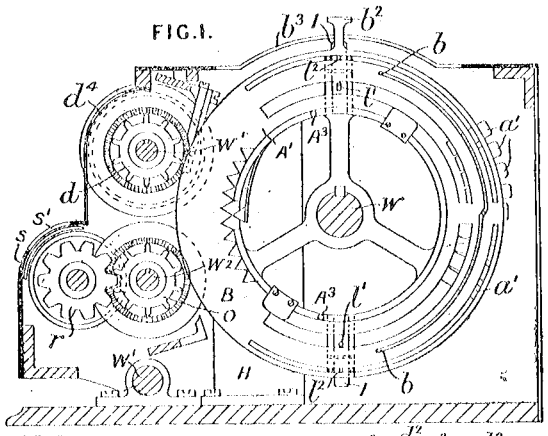

FIG. 3.

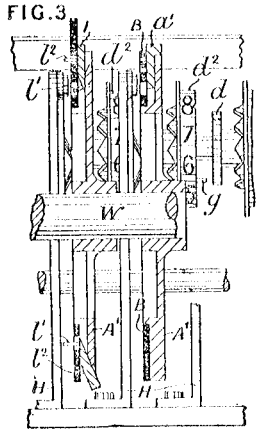

FIG. 15.

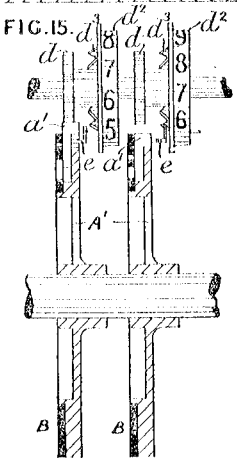

© B O B Williams Printed22/11/2023 CalcPatents Ed. 1.doc

Labofish C S 1736/1901 Adder on type writer

1736. Labofish, C. S. June 27, A.D. 1900, [*date applied for under Sec. 103 of Patents &c. Act, A.D. 1883*].

FIG.2.

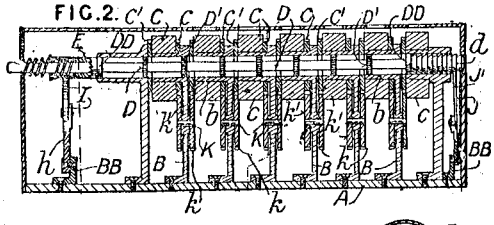

FIG.6.

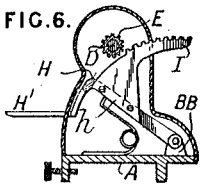

Calculating - apparatus. —Relates to a calculating-device, particularly applicable for use in connection with type-writers. A number of registering-wheels C, graduated in one direction for additions and multiplications and in the opposite direction for subtractions and divisions, are mounted on hollow bosses *b* on standards B secured by screws to a base A having lugs for securing it to a type-writer frame. Through the bosses *b* passes a shaft D having a series of inclined grooves *d* at one end, a series of toothed wheels or notched collars D^1 adapted to engage toothed recesses in wheels c^1 carried by the wheels C, and two collars DD. The wheels *c*, c^1 of adjacent registering-wheels are geared together by wheels k^1, with one tooth, and wheels *k*, with ten teeth and a detaining-pawl, on axles K. A rocker H, Fig. 6, formed with nine slotted arms H^1, is pivoted by spring-supported arms *h* to standards BB, and carries a segment I adapted to operate an elongated ten-toothed pinion E having clutching-teeth pressed by springs against similar teeth on a collar DD, Fig. 2, so as to operate it in one direction only. The rocker H also carries a split dog consisting of a rigid part J and a loose part J^1, which falls to the left each time it is released from a groove *d* by the depression of the rocker, and on its return allows the spindle D to advance by one groove *d* and bring the second wheel D^1 into gear with the second wheel c^1. The arms H^1 are disposed upon the rocker so as to be in a stepped order under the type-writer keys, which move them an amount corresponding to the numeral. The casing has sight-holes, slots for the arms H, a pivoted cover for the aperture through which the grooved end of the spindle D passes, and a pivoted spring carrying a pin projecting through an aperture so as to keep the adjacent arm *h* depressed.

© B O B Williams Printed22/11/2023 CalcPatents Ed. 1.doc

Labrousse C D 1470/1867 Adder

1470. Brooman, C. E., [*Labrousee, C. D.*].
May 17. [*Provisional protection only.*]

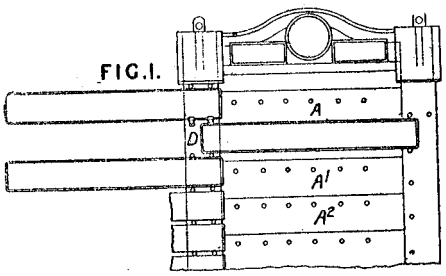

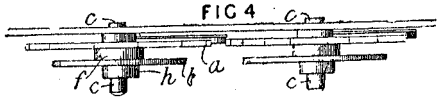

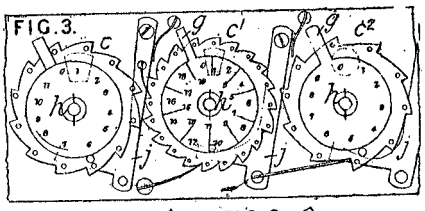

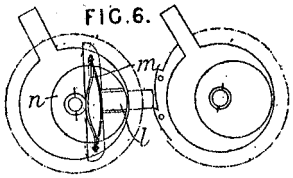

Calculating and counting apparatus; receipts, checking.—Relates to apparatus for adding money receipts &c., applicable for facilitating the 'engagements' which arise in connection with sporting meetings and matches. Fig. 1 shows part of a portable board ready to act for a race. A table consisting of one or more panels A, A^1, A^2 carries counters C, C^1, C^2, Fig. 3. The table is mounted on a frame D carried upon suitable legs and rollers. The panels carry the pins for the counters and are pierced with openings to allow the figures thereon to be seen. The counters are decimal or duodecimal according to the system used, and the wheels, bands, or slides can be worked from behind so as to leave the total unknown to the markers. A hook is used to work the counter; its point is introduced through holes *o* in a movable wheel, Fig. 3, which wheel is also shown at *a*, Fig. 4, and the desired figure is marked or indicated on the wheel C. The counter preferred consists of a movable wheel *a* and a fixed wheel *b*. The former turns on a fixed pin *c*, and its teeth form stops for springs. The wheel bears figures 1, 2, 3, &c. which serve as indicators to the markers; it is furnished with a fixed stop and is keyed to the pin *c*. Movement is communicated from one wheel to another by a double spring lever *j*, Fig. 3, or by an appliance *l*, Fig. 6, with pins, the movement of which is controlled by spring *m* and eccentric *n*. In the first case the wheels all turn one way, and in the second case the odd and even wheels turn in opposite directions and the number of surfaces is diminished. The springs vary in power and length, and consequently cause different sounds according to the positions of the wheels, so that the senses of sight and hearing check each other. A recapitulative reckoner is used, and can be worked by strap, cranks, springs, or otherwise, at the same time as the marking-reckoner, but for double control it is preferred to have a double operation of registering by series, and by recapitulation.

Labrousse C D 3117/1867 Adder

3117. Brooman, C. E., [*Labrousse, C. D.*]. Nov. 5.

Calculating-apparatus; counting-apparatus; voting-apparatus; receipts, checking; admission-fees, checking.— Relates to apparatus which can be used for checking admission-fees or other receipts or expenses, for commercial purposes generally, for betting at sporting meetings or matches, and for election and other purposes. The mechanical counters are carried on a reckoning-board of one or more panels on which are the pins and fixed points required by the counters. The board is formed with openings through which the figures on the counters are seen. Tickets are given as receipts for amounts paid or goods supplied. In the mechanical counter, a totalizer is operated by gearing or by a commutator, bell movement, or otherwise. A bell T, Fig. 2, is sounded every time a total is calculated. The return to zero is effected by a rack *j* in the part M. The arithmetical portion of the lower counters is actuated manually. Each lower counter C is supplied with tickets numbered 0 to 19 for shillings and 0 to 9 for the decimal units, and so on. The tickets *b* are pressed forward by springs or compressed gas or liquids, and expelled by pushing-pieces *p*. A slide *r* assists the pushing-piece. It is withdrawn to lift the pushing-appliances to disengage the counter and refill it. The lever of the pushing-appliance acts on a commutator, which opens an electric circuit which, by the aid of a 'Morse' apparatus, regulates the proceedings. Instead of using pushers, the tickets may be delivered by the thumb nail of the marker. In this case the following ticket is stopped by a spring. The Provisional Specification describes a form of counting-apparatus as follows :— A table consisting of one or more panels A, A^1, A^2, Fig. 1, carries counters C, C^1, C^2, Fig. 3. The table is mounted on a frame carried on legs and rollers. The panels carrying the pins for the counters are pierced with openings to allow the figures thereon to be seen. The counters are decimal or duo decimal, according to the system used, and the wheels, bands, or slides can be worked from behind so as to leave the totals unknown to the markers. A hook is used to work the counter; its point is introduced through the holes *o* in a movable wheel, Figs. 3 and 4, and the desired figure is marked or indicated. The counter preferred consists of a movable wheel *a* and fixed wheel *b*. The former turns on a fixed stud *c*, and its teeth *d* form stops for springs. The wheel *b* bears figures 1, 2, 3, &c. which serve as indicators to the markers, and is furnished with a fixed stop *g* and a nave *h*, keyed to the stud *c*. Movement is communicated from one wheel to another by a double-spring lever *j*, Fig. 3, or by an appliance *l*, Fig. 6, with pins, the movement of which is

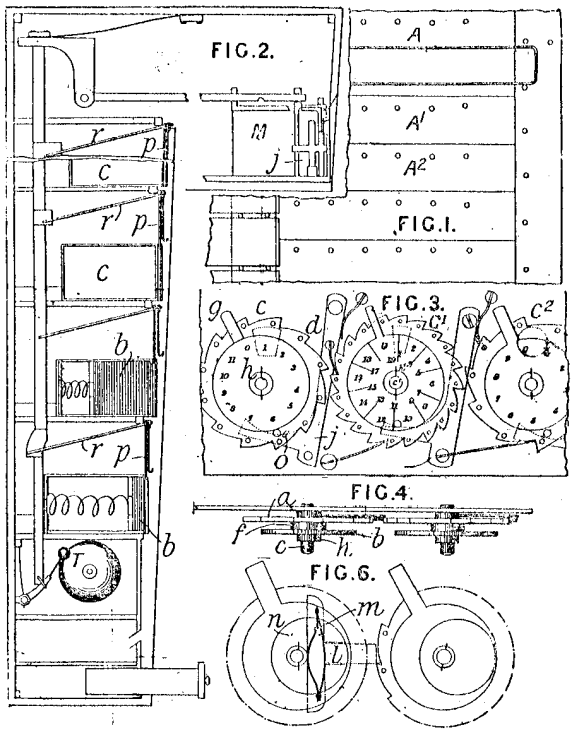

controlled by a spring *m* and eccentric *n*. In the first case the wheels all turn one way, and in the second the even and odd wheels turn in opposite directions and the number of surfaces is diminished. The springs vary in power and length, and consequently cause different sounds, according to the positions of the wheels, so that the senses of sight and hearing check each other. A recapitulative reckoner is used and can be worked by straps, cranks, &c. at the same time as the marking-reckoner, but for double control it is preferred to have a double operation of registering by series and by recapitulation.

Lacoste A L 17647/1895 Solve trig problems

7647. Lacoste, A. L.
April 16.

Calculating apparatus.—The apparatus is for solving various trigonometrical problems, such determining the sides of a rightangled triangle when the hypotenuse and an angle are given. The instrument may be variously modified, but Fig. 1 shows the essential features. A square I, I¹ is pivoted to a block G working in a slotted arm B pivoted at B¹. The arm C is similar to B, and the two are connected by a link D so as to remain always parallel, and are actuated by a handle D¹ also carried by parallel motion links. Blocks H, O, K,

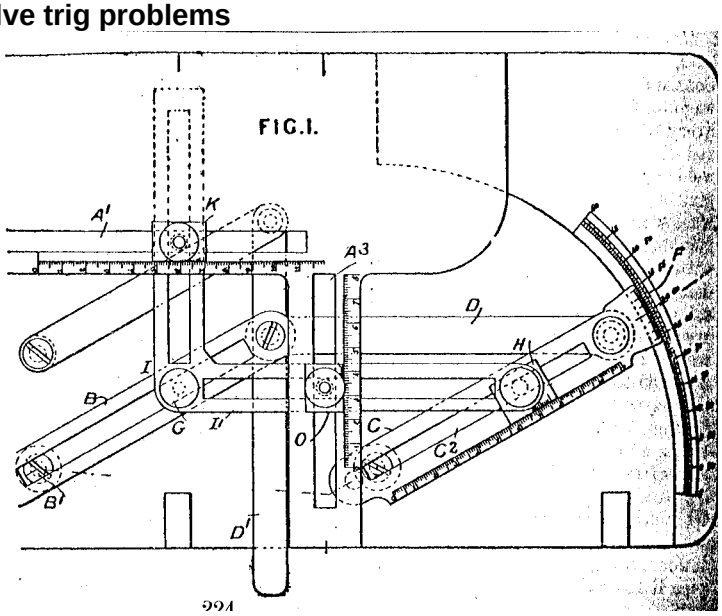

Lafond G 2195/1899 Adder

2195. Lafond, G. Jan. 31.

Calculating - apparatus; receipts, checking and recording.—The apparatus is for adding money, and is applicable for cash registering. Several forms are described, of which those shown in Figs. 1 and 1* may be taken as typical. Five fixed dials A, B, C, D, E divided into 24, 20, 10, 10, and 10 equal divisions are used for the English system of coinage. The first and second are the pence and shillings dials, and the zero division of all the dials are cut away at a^1, b^1, c^1, d^1, e^1, to expose similarly-graduated movable dials a, b, c, d, e beneath. The edges of these dials project beyond the fixed dials, and are provided with notches, into which, in the act of adding, a pointer may be placed opposite the number to be added; the dial is then carried round until the pointer is arrested by striking a shoulder on a fixed ring below. The dials are geared together so that the necessary carrying is performed. The form of gear shown in Fig. 1*

enables all the dials to move in the same direction and the scales to run the same way. The dial e carries with it a plate, not shown, by means of pawl and ratchet mechanism; on this plate is

FIG. 1.

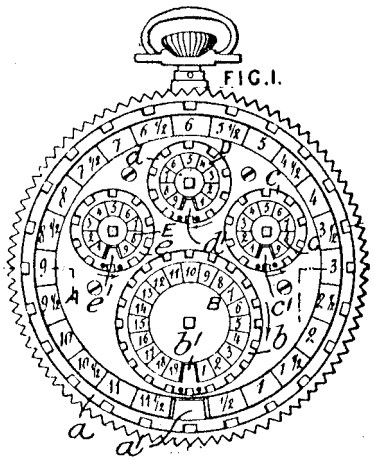

FIG. 1*

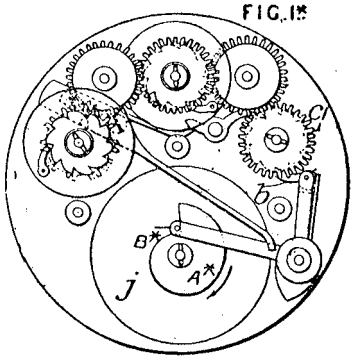

spring pawl, which is pushed out at each complete rotation by an incline on the casing, so as to engage a ratchet-wheel on the spindle of a disc j to which the dial b is connected. A snail A* actuates the spring lever B* by the pawl b, on which the next wheel c^1 is advanced. The other wheels are driven by gear analogous to the Geneva stop mechanism, and intermediate idle wheels cause these wheels all to turn in the same direction.

Landing L M 22951/1900 Solve interest & Dates

22,951. Landing, L. M. Dec. 15.

Calculating-apparatus for solving problems in interest and dates. A rotary disc F shows decimally at a slit A^3 in an overlying plate the interest for £10 for any number of days or months at the rates of interest marked at the slit, and the corresponding interest for periods of years (1 to 8) is read from a small disc C after bringing the required quadrant over the slit. A reading-arm H

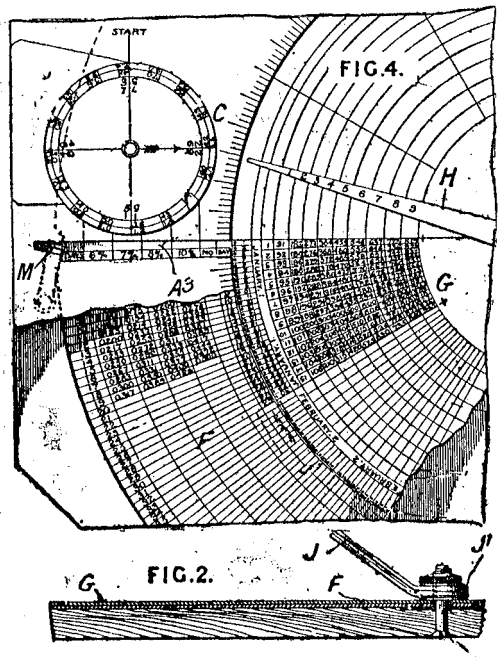

FIG.4.

FIG.2.

is then turned to read this amount and its simple multiples in the corresponding circles of a disc G concentric to the main disc. The partial products

Lane D 476/1889 Indicator diagrams etc

476. Lane, D. Jan. 10.

Calculating apparatus.—This is designed to add variables for the purpose of ascertaining their average or the integration of their products with times or lengths. It is applicable for ascertaining the areas of steam-engine indicator diagrams and for use with index instruments. Where the variables are not proportional to the rotations of

FIG. 5.

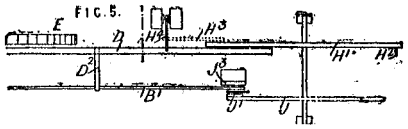

the index the instruments are provided with cams the polar ordinates of which represent the variables. The position of the index of an instrument or ordinate of a diagram determines the movement of a ratchet lever periodically allowed to drive an adding-wheel. The index, or cam, is fixed while the ratchet lever is brought up to it. As shown, the ratchet lever D remains elevated till a prop H^4 is knocked aside by a finger H^3 on a wheel H^1 that periodically rotates. The lever then falls till its pin D^2 strikes the index B^1. In the continued rotation of the wheel H^1 a pin H^2 lifts the lever D again. The index B^1 is held, while the lever falls, between a block J^3 and a cam J^1 on a wheel J. Two variables are made to influence the ratchet lever in the following ways :—(1) The axis of the lever D, or a parallel feeler, can be moved by the index of the second variable. (2) Coned pulleys are used. (3) A wheel and disc apparatus. (4) The two indexes are on axes at right-angles, and one is hinged so that it can fall on the other.

Lane M E 15899/1908 Simple adder

15,899. **Lane, M. E.** July 27.

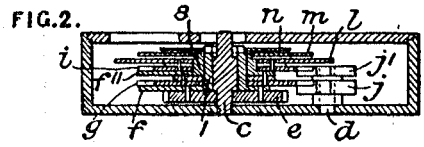

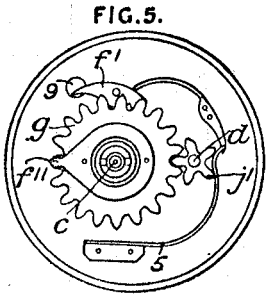

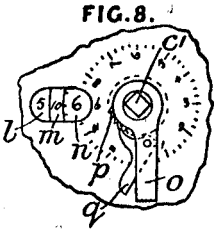



Calculating - apparatus. —In a simple adding-apparatus, the disks of different diameter are mounted on the same spindle, and the lowest one, which is actuated through a key or by a lever and pawl, has a single tooth to operate an intermediate pinion in gear with the next higher disk. The main spindle *c* carries the ratchet-wheel *e* of forty-eight teeth, to which the pence disk *n* is attached by the sleeve 1. Fixed to the wheel *e* is a tooth *f* attached to engage the pinion *j* on the spindle *d* gearing with the wheel *g* of twenty teeth, to which the shillings disk *m* is attached by the sleeve 8. A single tooth f^{11} is fixed to the sleeve 8, to act on the pinion j^1 in gear with the wheel *i*, to which the pounds disks *l* is attached. The top of the sleeve 1 is provided with two slits to receive the ends 2 of a key 3 which actuates the wheel *e*. The apparatus may also be operated by a pawl *q* and lever *o* with a ratchet-wheel *p* mounted on the square end c^1 of the main spindle. The positions of the pinions *j*, j^1 are controlled by the split spring 5, and the position of the wheel *e* by the pawl f^1 which may be withdrawn from engagement by inserting a pin in the hole 9, thus allowing the disks to be returned to the zero position.

Lange & Moe 17201/1903 Key adder

17,201. Lange, J. E., and **Moe, A. T.** Aug. 7.

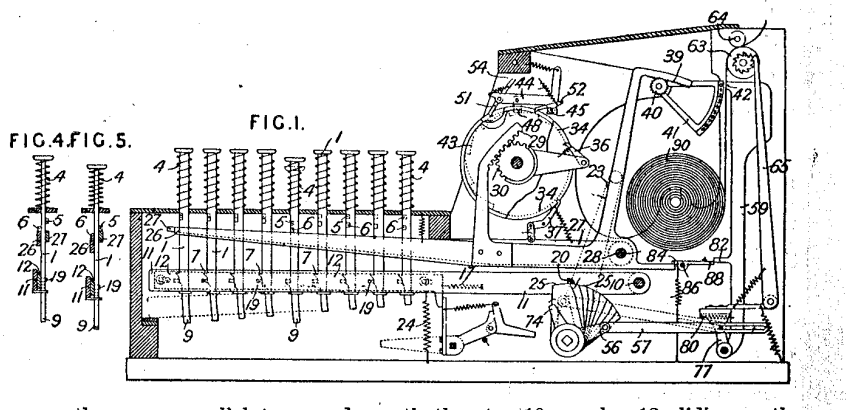

Calculating-apparatus.—In an adding-machine the number wheels are operated indirectly, and successively, the striking of a key locking it to a bar subsequently moved by the operating-lever. The numbers set are printed on a continuous strip. The nine keys 1, Fig. 1, represent the nine possible figures of one denomination, and there are other rows parallel to them. When a key is struck it descends against the spring 4 until the projection 7 catches underneath the stop 19 on a bar 12 sliding on the bar 11 and held by the spring 17. On opposite sides of each key are studs 5, 6, and after striking,

More text omitted

Lange, Lange & Moe 27246/1908 Key adder

27,246. Lange, J. E., Lange, L., and **Moe, A. T.** Dec. 15.

Calculating-apparatus.—In an adding-machine of the type described in Specification No. 17,201, A.D. 1903, means are provided whereby the items are indicated on segments or wheels mounted on the same shaft as the adding-wheel and actuated through the device that effects the forward rotation of the adding-wheels. The keys 8, movable between two levers 5, 7, have projections 9, 10, one on each side, arranged to strike the levers when a key is depressed. The projection 9 depresses the lever 5, and through the rack 4 rotates the loose hub 2, to which the segment 29 and pawl 13 are attached, the pawl actuating the adding-wheels 1 to an extent depending on the particular key depressed. The projection 10 then depresses the lever 7, and through the catch 11 locks the adding-wheels in position. Adjacent to the adding-wheels are item-indicating segments 18 loosely mounted on the shaft 21; these have pawls 23 engaging the pins 12 on the adding-wheels and are provided with a

3

ratchet arc 25, held concentric by a pin bearing on an arm of the segment and engaging a knife-edge 28 on the rack 4. The adding-wheels are held in the normal position by detents 15, and a small angular movement must be given to the segments 29 to release the adding-wheels, the detents being raised by the arcs 30 lifting the projections 32. At the same time this movement releases the knives 28

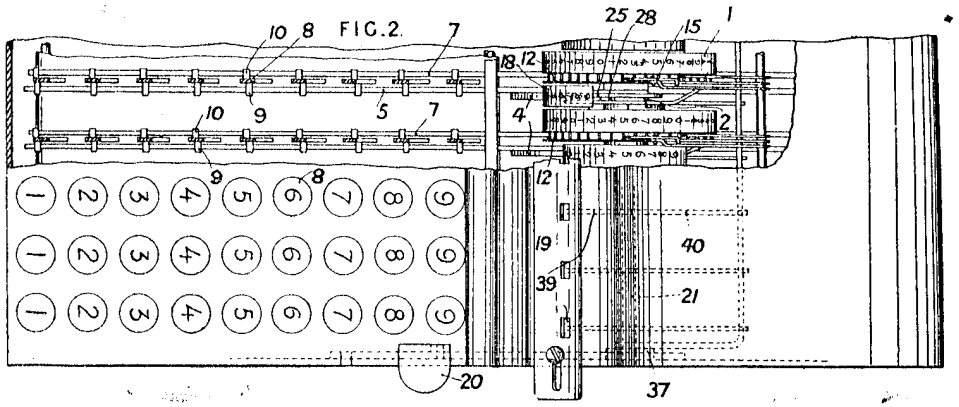

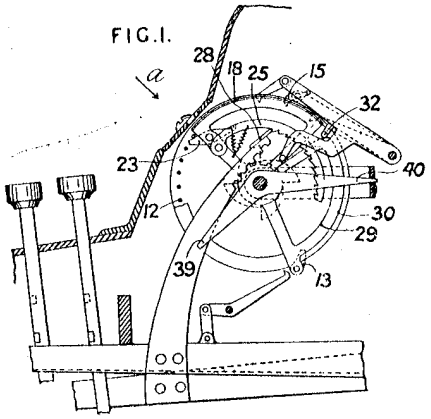

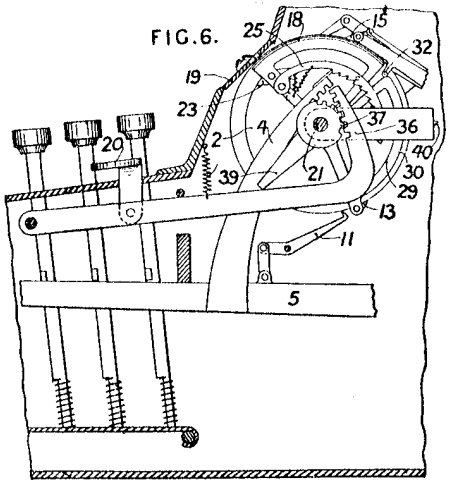

from their racks, so that the item indicating-segments are free to move with the adding-wheels. Depression of a key causes the pawl 13 to rotate the adding-wheel by an amount depending on the key depressed, and the segment 29, coming into contact with the item-indicating segment 18 after the initial movement, rotates it to the same extent. The catch 11 stops the rotation of the adding-wheel, and the pawl 23 prevents the segment 18 from rotating further. When the rack 4 is returned to its normal position, the knife engages the notch corresponding to the depressed key and prevents the friction at the time of transfer from moving the segment 18 forward. The item-indicating segments are returned to the zero position by depressing a special key 20, which through its lever and rack 36 rotates the hub 37, having the levers 39, 40 attached, so that the lever 39 engages one of the arms of the segments 18 and rotates them to initial position. The plate 19 slides in a groove and has slots to show the digits on the segments or wheels.

© B O B Williams Printed22/11/2023 CalcPatents Ed. 1.doc

Langhorne J T 20562/1901 Columnar adding on type writer

20,562. Haddan, H. J., [*Langhorne, J. T.*]. Oct. 14.

Calculating - apparatus. — Relates to a type-writing machine provided with a calculating-apparatus for the purpose of adding up columns of figures printed by the machine. In addition to the ordinary number-printing keys 4, Fig. 8, the keyboard is provided with a series of adding-keys 229, which serve not only to print figures, but also to operate the calculating or adding mechanism. The adding-mechanism itself is designated A in Fig. 14, and is adapted to slide on rods 206, 207, 208 mounted in the carriage. The adding-mechanism can thus be brought to the exact position required for the column of figures to be printed and added. The screwed rod 206 serves to adjust accurately the adding-mechanism after it has been roughly positioned while disengaged from the screwed rod. The adding-mechanism contains a series of registering-wheels representing units and tens of cents, and units to millions of dollars, and the wheels are actuated by pinions 214, Fig. 8, which are operated in turn, as the carriage is spaced forward, by a single toothed sector 215. The sector 215 is carried at the rear end of an arm 216 which projects from the centre of a rocking frame comprising arms 218 and tie-rods 219, 220. The frame extends nearly the full width of the machine, and rocks on a shaft 217 carried by the bell cranks 221 of a rocking frame fulcrumed on the rod 224. The rear ends of the bell cranks 221 are connected by a rod 225 which can be depressed by means of cams 240 so as to throw the sector 215 rearwards into engagement with the pinion 214.

When an adding-key 229 is depressed, the corresponding cam 240 is partly rotated by means of a spring-pressed dog 243 carried by the key stem 230, and the rod 225 is depressed. At the same time a cam 236 is rotated by means of a pinion engaging rack-teeth on the key stem, and, after the sector has engaged the pinion 214, the open slot of the cam engages with a stud 237 on the arm 216 and forces the arm downwards about its axis 217 so as to turn the registering-wheel through the

FIG.14.

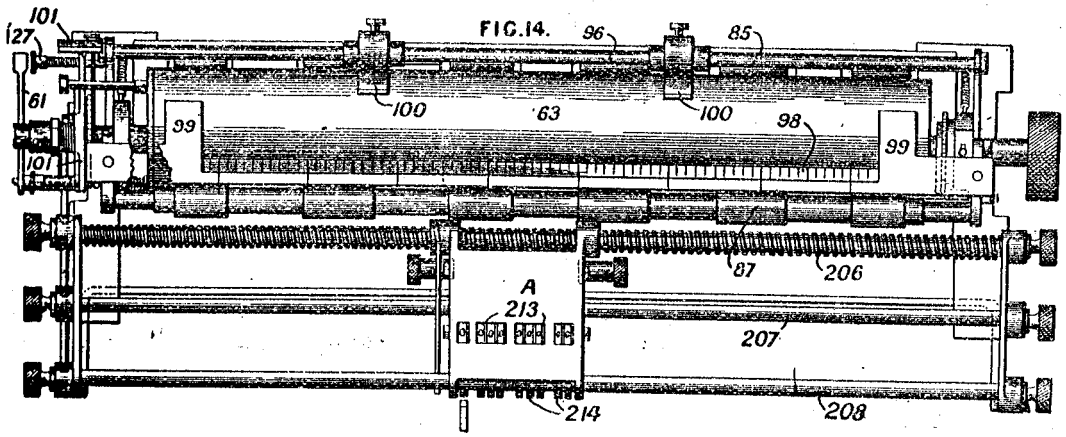

FIG.8.

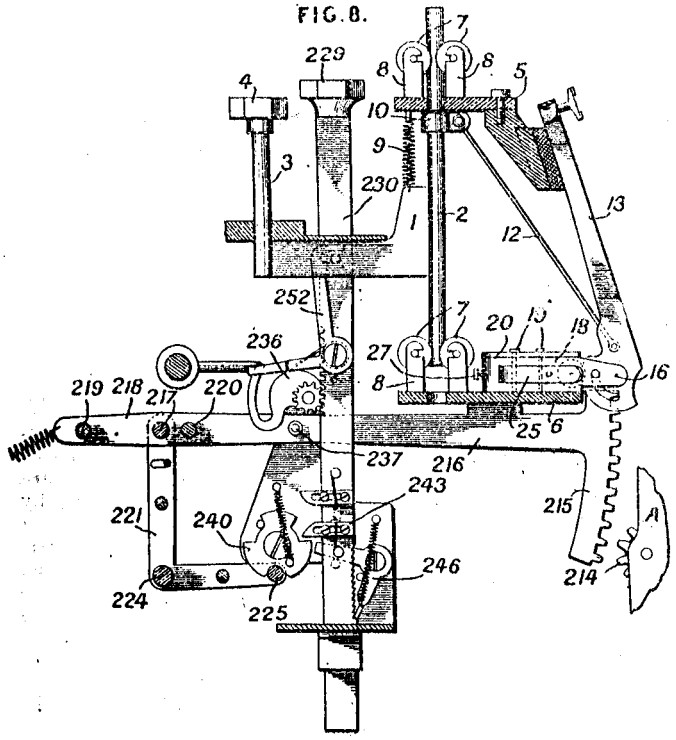

FIG.15

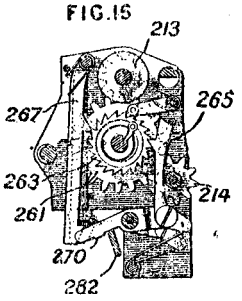

proper number of units The sector disengages from the pinion 214 before rising to the rest position. A device 246 prevents the key from rising unless it has been fully depressed. Catch-levers 252 lock the adding-keys 229 and number-printing keys 4 together when the former are depressed. When several columns of figures are to be printed on the same sheet and independently added, a corresponding number of adding-mechanisms is placed in position on the carriage. The adding-mechanism may be of any known construction, but the following special form is described :—The pinions 214, Fig. 16, mesh with intermediate gear-wheels 261 which engage with pinions fast on the registering-wheels 213. To each intermediate gear is secured a ratchet 263. At each half-revolution

101

© B O B Williams Printed22/11/2023 CalcPatents Ed. 1.doc

Lanzirotti A G 1703/1873 Squaring the circle

1703. Lanzirotti, A. G. May 10. [*Provisional protection only.*]

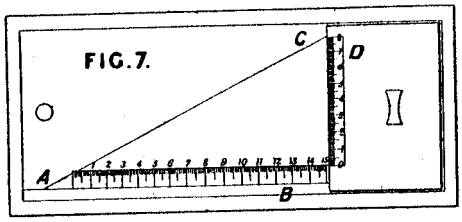

Computing-scales.—An instrument for finding the side of a square equivalent to a circle, or the radius of a circle equivalent to a square, consists of a right-angled triangle A, B, C with a graduated base A, B and a sliding graduated piece D. To find the square equivalent to a given circle, the scale D is moved until the graduation indicating the measure of the radius upon it touches the hypotenuse A, C. The corresponding reading on the scale A, B gives the side of the square.

Layton C E & E J 3307/1892 Adder disc type

3307. Layton, C. E., and **Layton, E. J.** Feb. 19.

Calculating-apparatus.—Relates to an adding-machine shown with the cover-plate removed. Units are added by means of a rotary disc *c* which has ten finger spots *g* or studs, correspondingly numbered on the cover-plate, and a single aperture c^1 to expose the digits marked in reverse order on a dial under the disc. Tens and hundreds are carried to toothed discs *d* and *e* by the passage of single teeth *m* and *n* on the units and tens wheels respectively, or tens and hundreds in the separate items to be summed are added by turning the discs directly by means of knobs f^1, f^2. The units disc *c* has ratchet teeth *h* engaged by a pawl *j* to prevent reversals. The correct movement of the other discs is similarly determined by pawls j^1, j^2. All the discs are formed by stamping out of sheet metal and bending tongues to form the teeth. In a modification, the units and tens discs are concentric.

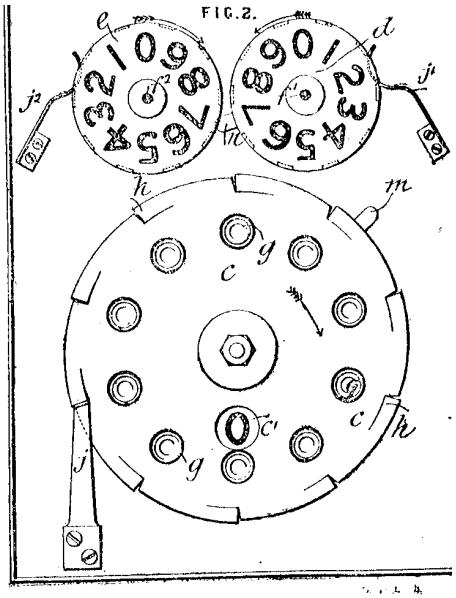

244

Layton E J 12032/1909 Thomas type machine

12,032. Layton, E. J., [*trading as* Layton, C. & E.]. May 21.

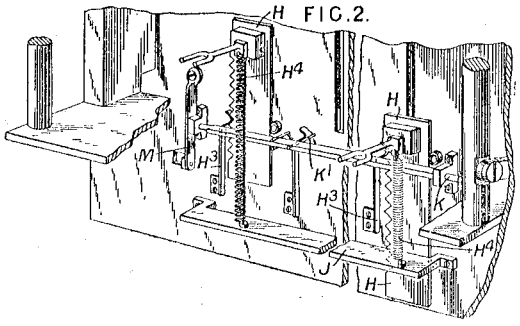

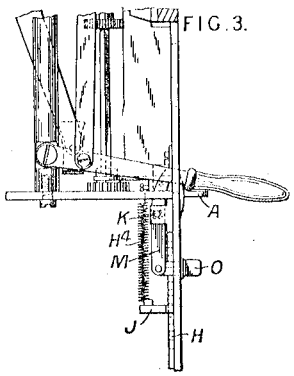

Multiplying-apparatus.—A calculating-machine of the Thomas type, described in Specification 13,504/51, has spring-controlled setting-slides or plates for one factor, which are held in the set position by detents adapted to be released by a trip-mechanism to allow the return of the slides to the normal position. Each slide A has a plate H underneath it, with teeth on one edge engaged by a spring detent H^3. A spring H^4, one end secured to a plate J forming part of the frame, and the other end fixed to the setting-plate H, tends to return the latter plate to the zero position. To release the detents, a bar K is arranged to be slid longitudinally, and is provided with a number of pins K^1 to engage the detents H^3. The bar K is attached at one end to a pivoted arm M, with a knob O projecting through a slot in the cover-plate. A movement of the knob O to the left, Fig. 2, trips the detents and allows the slides to return to the zero position. Equivalent manual operating-mechanism may be employed for moving the bar K.

Leder E 7018/1907 Multiplier

7018. Leder, E. March 23.

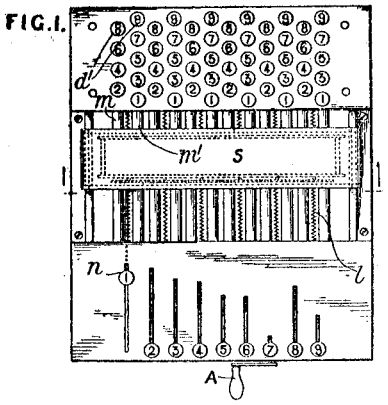

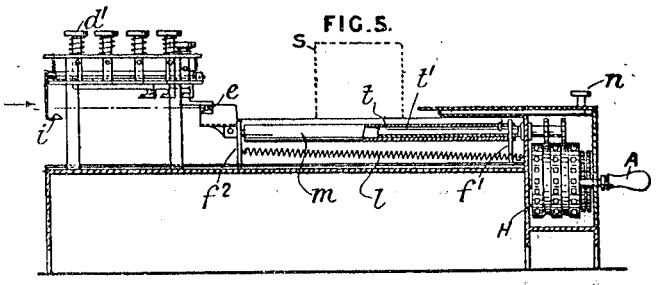

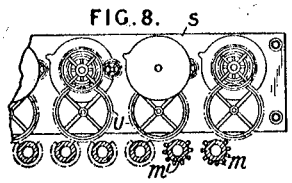

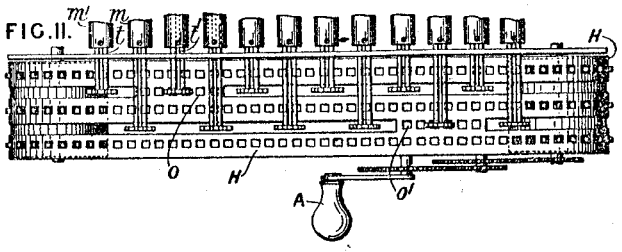

Calculating-apparatus; counting-apparatus. — A multiplying-machine has a keyboard for setting the larger factor and a series of slides upon which the less factor is set figure by figure; as each figure is set thereon a single turn is given to the main operating-handle, which registers the product and then spaces the totalizing-counter automatically one denomination to the right. Fig. 1 shows the keyboard d^1 arranged in two rows for each denomination, the totalizing-counter S, which has been forced rearwards by operation of the "1" sliding key n, and the main operating-handle A. Each bank of keys has allotted to it a pair of cylinders m, m^1, of which the units' cylinder m is shown in Fig. 8 in engagement with the units' receiving wheel U of the totalizing-counter, and the tens' cylinder m^1 with the tens' receiving wheel; the pinions upon the spindle of the numeral disks are geared to these wheels, and single-tooth transfer mechanism together with zeroizing-mechanism of ordinary construction is provided. The depression of a key in any bank determines how far the frame f^1, f^2 carrying the corresponding pair of cylinders shall move longitudinally forward under the control of the springs l, a short cross-bar e upon the end of the frame being normally held by a hook i at the rear and the hook releasing it when a key is depressed so that the hooked lower end of the key may arrest the cross-bar as it springs forward. There is longitudinal room on each cylinder for eighty-seven toothed circles, and these are arranged by suitable combinations of teeth on the tens' and units' cylinders respectively to represent all the possible products of the integers up to nine taken two at a time, and the distances of these various product circles from the "1" circle are so adjusted in a manner analogous to a logarithmic arrangement that the distance of the circle for any product is equal to the sum of the products of the distances for the few prime numbers of which it is formed, multiplied each by the index of that prime. Thus each pair of product circles is selected by adding the distance through which the key d^1 allows the cylinders to move to the distance through which the sliding key n moves the totalizing-counter with respect to them. The cylinders have a feathered connexion with the spindles t, t^1 bearing terminal pinions, as shown in Fig. 11, adapted to be rotated by the racks O, O^1 upon the endless flexible band H when given one rotation by the operating-handle A; one rack deals with the units and the other with the tens of each pair of cylinders, and they are so spaced as never to be simultaneously in action and thus to allow of simultaneous transfer. Any convenient mechanism may be employed for spacing the totalizing-counter one step laterally to the right as the operating-handle completes a revolution.

© B O B Williams Printed22/11/2023 CalcPatents Ed. 1.doc

Leder E 2706/1908 Series of logs on sheet on two drums

2706. Leder, E. Feb. 6.

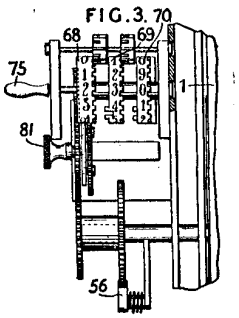

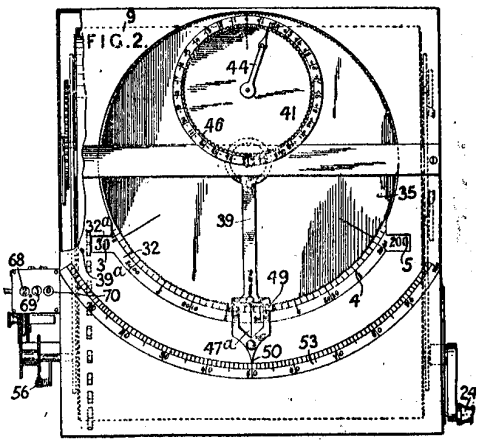

Calculating-apparatus.—A logarithmic computing-device consists of a uniform linear scale representing the mantissæ of the logarithms of numbers from 1 to 10, which is also graduated according to the corresponding numbers. For convenience, the scale is formed upon a sheet 1, Fig. 4, which may be moved to and fro between two drums around which it is rolled, by means of a handle 24 and suitable springs. The scale is divided into one hundred equal sections 4 formed as circular arcs of 120 degrees with centres equally distant upon the centre line of the sheet, whereby each section may be assigned to all mantissæ having a certain first two figures, which figures are tabulated upon the

margin 3. The scalar numerals represent natural numbers corresponding to their positions upon the scale, and the first exact four-figure number upon each section is tabulated upon the margin 5. As the

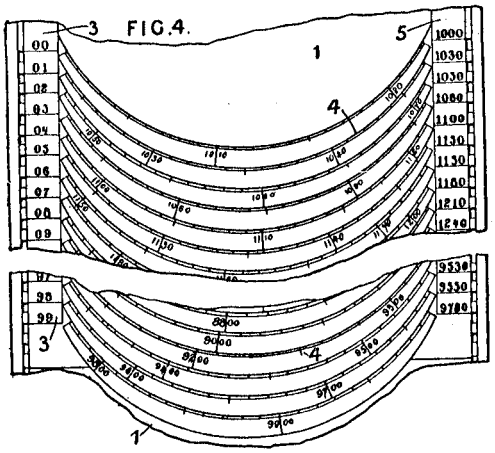

sheet passes beneath the top plate 9 of the apparatus, any required section may be brought into view through a slot 32, whereupon the corresponding marginal figures appear in windows 32^a, and the last three figures of a five-figure mantissa may then be set by means of an arm 39, pivoted at the centre of the slot 32 and having an index point 50, which serves for reading the required figures upon a scale of hundredths, 53, of equal angular extent with the sections of the main scale, and also has an index-line 47^a for reading the corresponding natural number upon the section of the main scale displayed. Arrangements for adding and subtracting a series of logarithms found by means of the apparatus are provided separately for the first two and last three figures of the mantissæ, the first two figures being automatically added as the sheet moves in one direction, by means of a pawl 56, Fig. 3, and wheel-work, upon a simple counter 68, 69, 70 fitted with a reversing-adjustment 81, whereby subtraction may be made from a number already accumulated upon the counter. To set characteristics manually, the highest numeral-wheel 68 may be moved laterally out of engagement with its transfer pinion and rotated by means of a handle 75. For the last three figures of the mantissæ, a simple counting-arrangement consisting of the wheel-work 35, 41, pointer 44, and scale 46 is actuated each time the arm 39 is displaced from its zero position as determined by the stop 39^a. For this purpose, a spring-controlled toothed slide 49 upon the arm is moved radially inwards to engage the toothed edge of the wheel 35, but is placed out of engagement upon the return stroke. When subtracting from a previously-accumulated total, this order is reversed. The sum of a series of logarithms may thus be obtained by adding the readings upon the two counters.

Leder E 22620/1908 Log apparatus

12,620. Leder, E. Oct. 24.

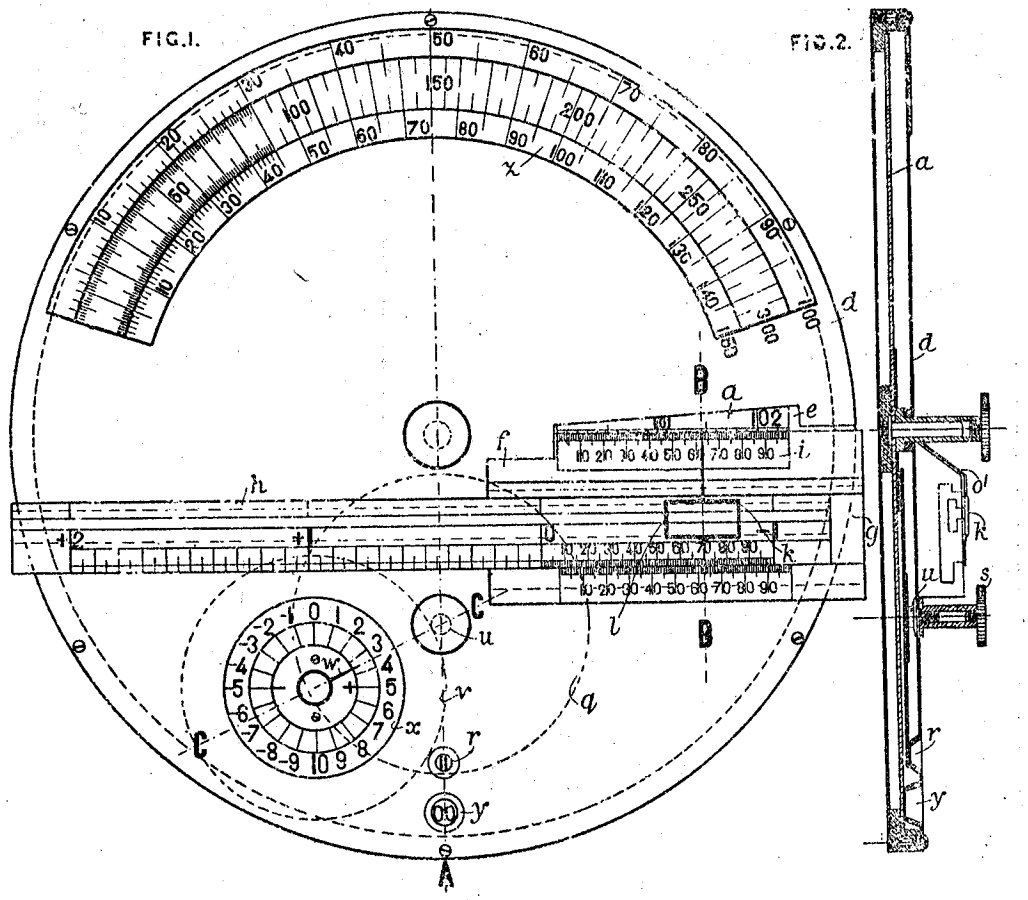

Calculating apparatus.—In logarithmic disk calculating-apparatus, the logarithmic scale is spread over a number of radii enclosed between two concentric circles. The number of radii is preferably one hundred, and the length enclosed between the two circles ten centimetres. The total length of the scale is taken to represent log. 10, and the first division on each part radius is repeated on a prolongation of the preceding radius. The first two figures of the mantissae are shown on the inner circle opposite to the radius and on the disk rim at a tangential opening in the casing, the remaining

digits being given by the length of the partial radius as measured by a scale carried on the casing. The numbers corresponding to the logarithms are marked along the scale as shown in Fig. 5. The

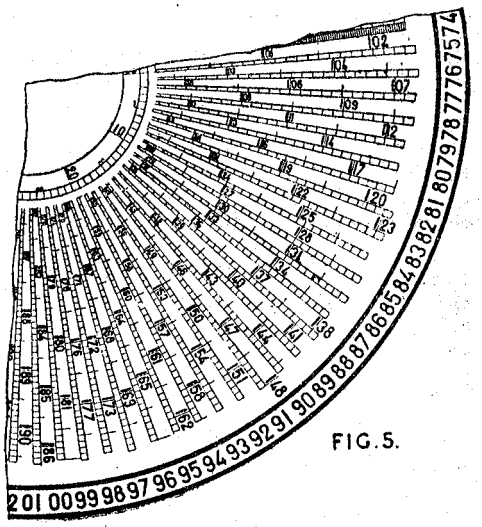

FIG. 5.

disk *a* is mounted, as shown in Fig. 2, to rotate in the casing *d*, which is provided with a slot *e*, Fig. 1, formed so that only one radial portion of the scale is visible. Mounted on the casing is a slide carrier *f* on the edge of which is formed a scale *i* equal in length to the one-hundredth part of the whole scale. Mounted in a groove *g* in the carrier is a movable slide *h* graduated in lengths equal to the scale *i* and marked with graduations +2, +1, 0, −1 as shown in Fig. 1. Attached to the slide is a runner *k* consisting of a frame *l* provided with a glass plate having an etched line o^1 arranged in the same plane as a pointer carried by the plate *k*. A stop-pin on the carrier *f* limits the movement of the runner to the left. Mounted on the casing so as to be revolved by a milled head *s* is a disk *q* carrying numbers 00–99. An opening *r* in the casing allows one of these numbers to be seen, and an opening *y* shows one of the numbers on the edge of the disk *a*. Mounted on the axis of the disk *q* is a pinion *u* engaging a toothed wheel *v* mounted on the axis of a disk *x*, the gearing being in the ratio of 20 to 1, and the rotation of the wheel *v* being indicated by a frictionally mounted pointer *w* on a scale *x* divided as shown into two parts showing + and − figures. An auxiliary scale *z* is provided, and is graduated as shown in Fig. 1 to facilitate simple multiplication and division.

Lee & Bottomley 11030/1914 Slide rule for toothed wheel design

11,030. Lee, J., and **Bottomley, F. J.** May 5. [*Cognate Application*, 19,957/14.]

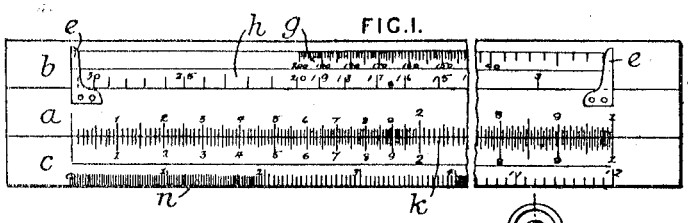

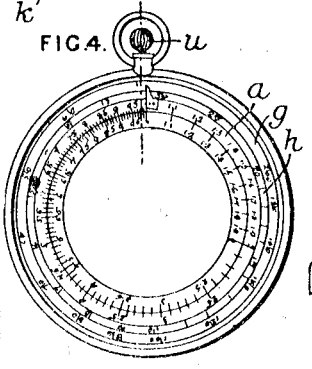

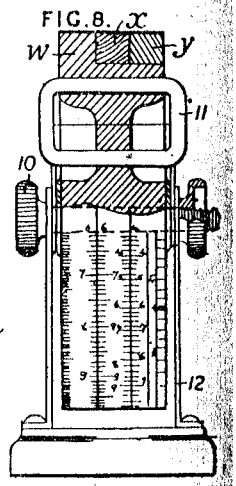

Slide-rules.—A slide-rule for calculations in connexion with toothed wheels is graduated so that the pitch dimensions, the number of teeth, or the pitch-circle diameter may be determined when any two of these quantities are known. The sliding scale *a*, Fig. 1, and the scale *k* on the lower portion *c* of the stock are graduated logarithmically to represent respectively diameters of pitch circles and dimensions of pitch spaces. The number of pitch spaces is shown on the scales *h*, *g* on the upper side *b* of the stock; these scales are graduated by multiplying the length of the rule in inches by the logarithm of the sine of the angle (180 ÷ number of pitch spaces) in degrees, the result of which is the distance in inches of the corresponding graduation from the left-hand end of the scale. The slide *a* may be furnished with index pointers &c. *e*, and a scale of lengths *n* may be marked on the stock. In a modification, a cursor is provided; also scales to represent the squares of the graduations on the portion *c* may be marked on the upper edge of the slide *a* and the adjacent edge of the portion *b*, the scales *h*, *g* being shifted upwards. Similarly a cube scale may be marked on the lower edge of the stock, the scale *n* being placed on the upper edge. Fig. 4 shows a circular form of calculator in which the slide *a* is made as a ring having on the back a rack revolved by a knob *u*, and retained in any position by small leaf springs. In a cylindrical type, Fig. 8, the slide *a* is carried by a ring *x* revoluble by hand or rack and pinion relatively to a member *w*, *y* sup-

566

Lefevre H 1665/1871 Slide Rule

1665. Lefevre, H. June 24.

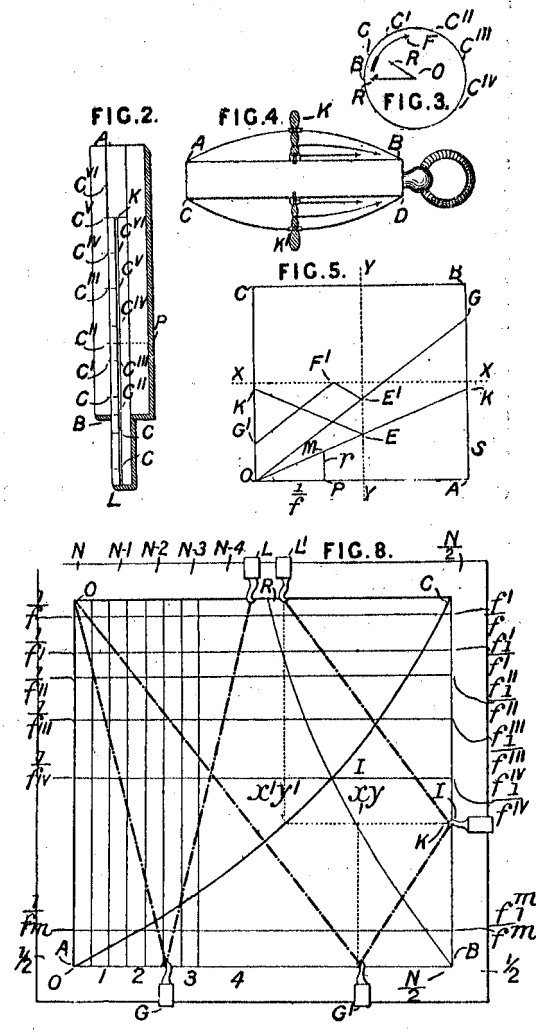

Calculating-apparatus.—Relates to slide-rules and folding-appliances for facilitating addition, subtraction, multiplication, division, extraction of square roots, and other arithmetical processes. A rule A B, Fig. 2, has a movable portion K L sliding in a groove, and this movable portion also has a longitudinal groove in which slides a pointer P. The length A B is taken as unity and divided at C, C^{I}, C^{II}, &c. in proportion to various fractions, and the portion K L is similarly divided. Let the pointer be placed successively opposite each of the fractions to be added together, each time drawing K L back so that the pointer P is brought opposite the lower end of the scale A B. The division of K L, then corresponding to B, will be the sum of the fractions. To economize length one side of the rule A B may be graduated with fractions up to half, and the other graduated from A to B with fractions from half to unity. The slide K L is similarly divided. Subtraction

Leguin E 1753/1790 Longitude at sea by the lunar method, abr and full d

A.D. 1790, June 1.—N° 1753.

LEGUIN, ESTIENNE.—Instruments for "calculating the longi-" tude."

By means of this invention the longitude may be found according to the lunar method.

"The said invention consists of two machines or instruments."

OP. C

The first "consists of a semicircular wood frame, cased on its" "outward rim with a metal plate, and which I call a semicircle," the metal plate is divided into degrees, and its two ends are connected by a strengthening bar, from the centre of which to the centre of the semicircle another strengthening bar is fixed; a centrically mounted index that moves over the graduations completes the arrangement. The second instrument consists of a compass with four legs, two of which are made to move horizontally and the other two vertically.

The apparent distance between the sun and moon, and their respective altitudes having been taken by means of a sextant, an arithmetical operation involving a multiple of the correction of the sun and of the moon is performed and the numbers thus obtained are employed to enable the compasses to be used in connection with the semicircle; the true distance of the sun and moon is the result of the manipulation.

The latitude, "the corrected height or complement," and the declination of the sun, moon, or star, are the data for finding the horary angle. The compasses are used in connection with the semicircle in a similar manner to that employed in determining the true distance of the sun and moon.

"This instrument revolves all kinds of spherical triangles."

[Printed, 6*d*. Drawing. See Rolls Chapel Reports, 6th Report, p. 182.]

A.D. 1790. JUNE 1. Nº 1753.
LEGUIN'S SPECIFICATION.

FIGURE 1.

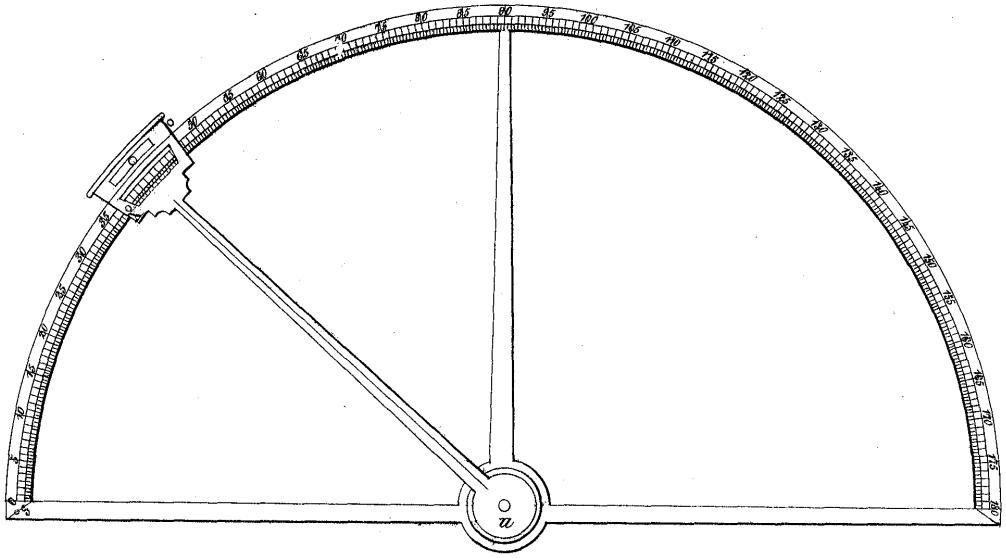

FIGURE 2.

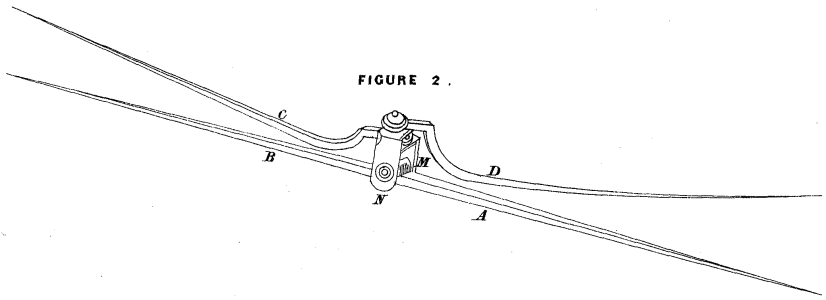

FIGURE 3.

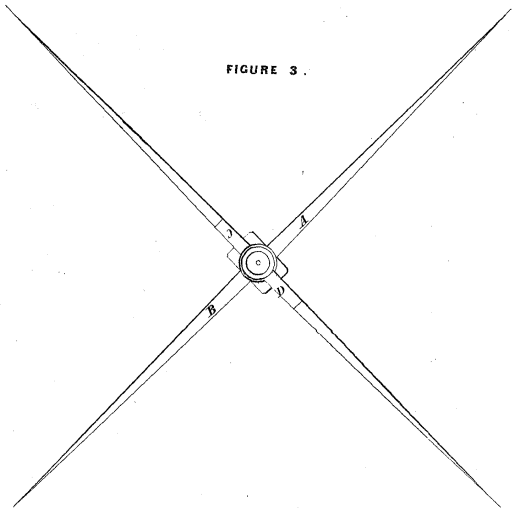

© B O B Williams Printed22/11/2023 CalcPatents Ed. 1.doc

No reference found. The definitive work on the Longitude [23] does not mention Leguin or this patent

Lemaignen R B A 15094 /1908 Drum adder

15,094. Lemaignen, R. B. A. July 16.

Calculating-apparatus. — In a key-operated calculating-machine, an indicator consisting of a single drum or sector is provided, which shows at each operation of the machine the amount registered during that operation, and thus forms a check for the operator upon the key struck, and the completeness or otherwise of its stroke. The invention is shown as applied to the adding-machine described in Specification No. 15,095, A.D. 1908. The depression of a key of the machine rocks the shaft 9^1, Fig. 3, thereby rotating the ratchet-wheel *a*, fixed

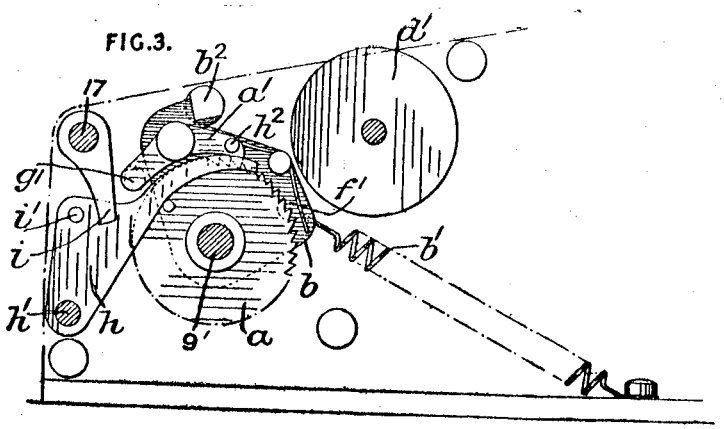

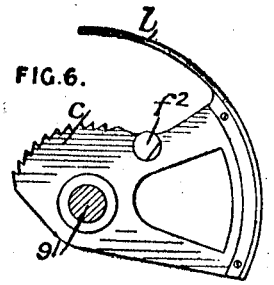

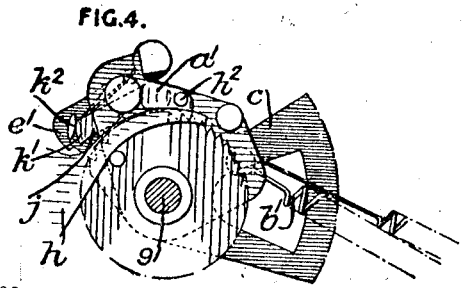

Lemaignen R B A 15094 /1908 Drum AdderCont)

thereto, which drives the spring-controlled plate b, loosely pivoted upon the shaft 9^1, by means of the pivoted pawl a^1. A tappet g^1 fixed to the pawl a^1 is adapted, upon the rotation of the plate b, to engage with a corresponding tappet g^2, Fig. 2, upon a spring-controlled pawl e^1 and to raise it out of engagement with the ratchet-teeth e of a spring-controlled sector-plate c, which is adjacent to the plate b and loosely pivoted upon the shaft 9^1. The pawl e^1 is thereupon held by the spring-controlled catch e^3 fixed to the shaft 17, and the plate c, being released, rotates in a clockwise direction under the action of its spring c^1 until the pin f^2 meets the pin f^1 upon the plate b, whereupon the plate b carries round the plate c in the opposite direction. The depressed key is adapted at the end of its downward stroke to rock the shaft 17, thereby releasing the pawl e^1 which re-engages with the teeth e and holds the plate c in the position to which it has been carried by the plate b. The shaft 17 also carries an arm i which, striking a pin i^1 upon a lever h pivoted at h^1, causes the lever to wipe the pawl a^1 out of engagement with the ratchet-wheel a by means of a pin h^2, and so allows the plate b to return to its original position as determined by the stop b^2. A toothed wheel d^2, attached to an indicating-drum d^1 gears with teeth d upon the plate c, and thus causes a figure to be displayed by the drum corresponding to the actual rotation imparted by the key to the shaft 9^1. If a key be depressed insufficiently to rotate the shaft 17, the catch e^3 will remain in engagement with the pawl e^1, and the lever i will not be operated to disengage the pawl a^1 from the ratchet-wheel a. The plate b will consequently not be restored by its spring b^1, but will hold the sector-plate c in the position it has reached by means of the pins f^1, f^2. At the next operation of the machine the number corresponding to the rotation given to the shaft 9^1 will be added upon the indicator to the number already shown thereon, and the figure displayed will be greater than the value of the depressed key, or, if the sum of the two numbers be greater than the number of teeth e upon the plate c, the whole machine will be brought to a standstill by this plate striking the stop b^2. In this case, the spindle 17 may be rotated by means of an external driver (not shown) to release the pawl a^1 and plate b. When the same key is operated twice running, and the second depression takes place before the key has completed its full upward stroke, then the rotation imparted to the shaft 9^1 in the two cases differs, and the numerals successively shown by the indicator will differ also. In a modification, shown in Fig. 4, the tail of the pawl a^1 bearing the tappet g^1 is replaced by a pivoted arm j provided with a cam-shaped projection k^1, which is adapted to engage a correspondingly-shaped cam-piece k^2 on the pawl e^1 and disengage the pawl from the sector-plate c, as before, in one direction of rotation, and in the other to slide over and be raised by the cam-piece k^2. In the form shown in Fig. 6, the plate c is adapted to act directly as the indicator, a blade l suitably numbered being attached thereto.

FIG. 2.

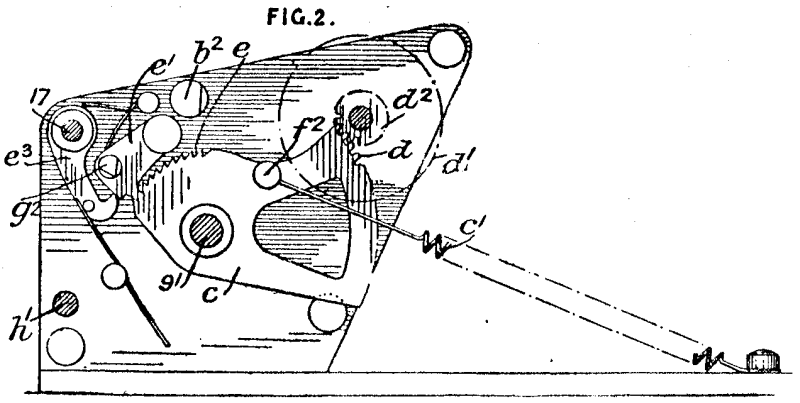

Lemaignen R B A 15095/1908 Adder variable units

15,095. Lemaignen, R. B. A. July 16.

Calculating-apparatus; receipts, checking and recording. — In the registering-mechanism of calculating machines, cash registers, and the like, (1) a pair of idle or supplementary wheels is provided between each receiving-wheel and its totalizing-drum, in addition to the usual transmitting-mechanism, so that, in order to adapt the machine to a different denominational system (e.g. to days, hours &c., from pounds, shillings, &c.), it is only necessary to substitute other supplementary wheels and drums. The invention is illustrated in connexion with a key-operated single-bank adding-machine assumed to be provided with the indicator referred to in Specification No. 15,094, A.D. 1908. The following features are also described in detail: (2) the key-operating and stop-mechanism; (3) the denomination-selector carrying the master setting-wheel with the positioning-means therefor; (4) a stop-mechanism for preventing backward rotation of the registering-train; (5) the registering-wheels with the allied transfer and overthrow-preventing mechanism; (6) the means for removing the overthrow-preventing stop from the particular receiving-wheel it is desired to operate; and (7) the zeroizing-mechanism. (1) To each drum 20, Fig. 4, is fixed a toothed wheel 22 gearing with a wheel 22^1 attached to the usual receiving-wheels 23

Lemaignen R B A 15095/1908 Adder variable units (Cont)

which are successively engaged by the master setting-wheel 23¹, described below. (2) The depression of a key 1, Fig. 4, rotates by means of a pin-and-slot connexion 11, 10 the plate 8, loosely pivoted upon the shaft 9 and carrying the spring-controlled pivoted pawl 13. The pawl 13 drives the ratchet-wheel 12 fixed to the shaft 9, thus driving the toothed wheel 38¹ operating the registering - train through the toothed wheel 38 and setting - wheel 23¹, until a pin 19 on the plate 8 engages with one of a series of arms 18 fixed to the shaft 17, thus bringing a stop-pawl 16 into the path of the teeth of a ratchet-wheel 15, fixed to the shaft 9, and stopping the machine. (3.) The denomination - selecting carriage, consisting of cheeks such as 34, Fig. 4, slidably-mounted upon the rod 60 and bearing the setting-wheel 23¹ feathered upon the shaft 36, is adapted to be positioned in engagement with any one of the denominational series of receiving-wheels 23 by means of cords 43, 44 controlled by a drum 39, Fig. 6, mounted upon a shaft 40. This shaft is adapted to be rotated through bevel-gearing 47, 48 in one direction by the depression of a key which drives the ratchet-wheel 49 through a pin 56, slotted plate 54, and pawl 53, in a manner similar to that already described in connexion with the keys 1. A detent 50 for the ratchet-wheel 43 is mounted on the key-lever 51, which is adapted on the depression of the key 52 to engage with a finger 50¹, projecting from the driving-pawl 53, and to disengage both pawls from the ratchet-wheel. When this takes place, the shaft 40 and drum 39 are driven in the opposite direction by a spring-drum fixed to the shaft 46. A pointer is provided on the carriage showing which one of the denominational sets of registering-wheels is being operated. (4) To prevent backward rotation of the registering-trains when the machine is suddenly stopped at the end of a key-stroke by the stop-pawl 16, a spring-controlled detent 79, Fig. 6, is arranged to operate in connexion with a ratchet-wheel 78 fixed to the shaft 36. (5) Cams 28, Fig. 3, fixed to the registering-drums and having one or more steps, operate the drums of higher denomination at transfer by means of projections 28¹ upon levers 29, pivoted on a shaft 30 and controlled by springs 31. The levers carry spring-controlled pawls 32 adapted to engage with and advance ratchet-wheels 25 attached to the wheels 23, exact movement being ensured by pawls 26. The pawls 32 are provided with tails, and their movement is limited by pins 32¹, on the transfer-levers 29, engaging therewith. Overthrow is further provided against by means of fingers or stops 29¹, on the levers 29, which engage between the teeth of the wheels 22 attached to the next higher registering-drums. (6) Before a particular receiving-wheel can be operated by the setting-wheel 23¹, this overthrow-preventing stop 29¹ must be disengaged, and this is accomplished automatically, when the denomination-selector is moved, by a slide 62, mounted on a shaft 62¹, which engages

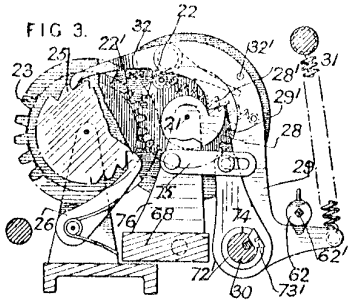

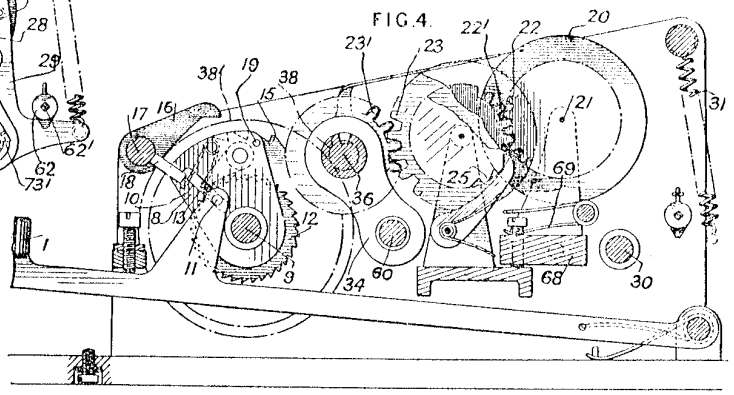

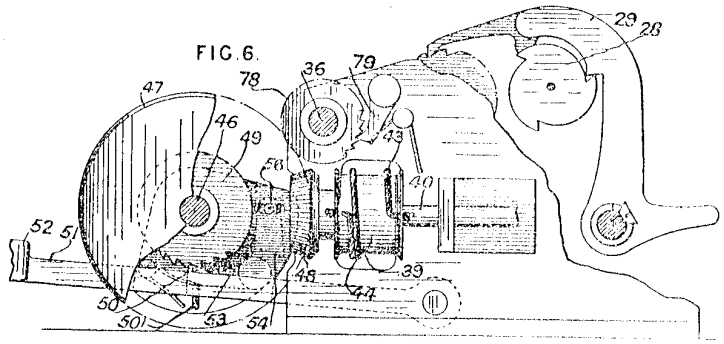

© B O B Williams Printed22/11/2023 CalcPatents Ed. 1.doc

Lenthall C B 2451/1910 Tidal height calculator

2451. Lenthall, C. B. Feb. 1.

Calculating-apparatus.—Relates to means for calculating the height of the tide for any time at a place for which the height of the mean spring tide and the time of high water are known. A pivoted arm moves over a scale divided in one form into six hours and the quarters, or, as shown, into four, five, six, seven, or eight hours and quarters, and a scale A is fitted sliding parallel to the diameter of the circular scale and graduated to show height of tide. Setting is effected by bringing the half mean spring height of tide opposite the centre of rotation of the arm, and bringing a slider on the arm to the high-water for the day, the arm being coincident with the diameter. On moving the arm round through the interval that has elapsed since high-water, the reading on the scale A opposite the slider on the arm gives the required height. A simple slider may be employed as described above or, as shown, a pin on a nut carried by a screwed arm N and adjusted b bevel gear from a milled head P may have pin engaging a light sliding slotted plate carrying the pointer H. The scale may be op rated by means of a pinion. Instead of mech nical parts, suitable circles and lines may employed as shown in Fig. 5.

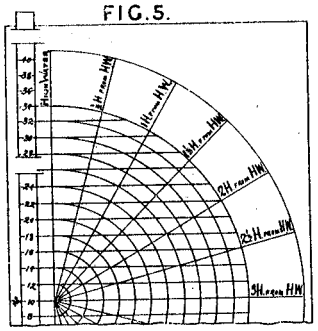

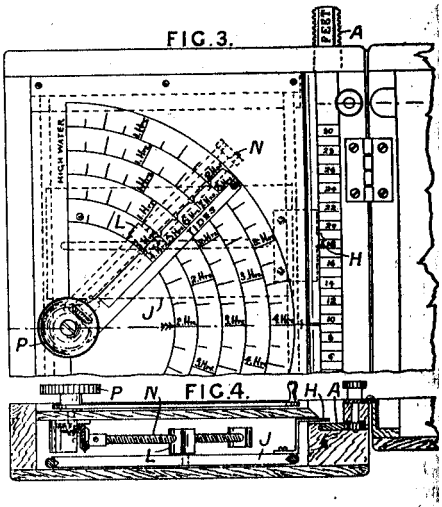

Leumann R 21025/1904 Multiply by repeated addition

21,025. Leumann, R. Sept. 30.

Calculating-apparatus; counting-apparatus.—An adding and subtracting machine which multiplies by repeated addition and divides similarly is shown in plan in Fig. 1. The numbers seen through the front holes 34 indicate the product, difference, sum, or remainder, and those seen through the back holes 69 the multiplier or quotient. Fig. 2 shows a vertical section through the spindles 18 of the figure discs 19. Two sleeves 26, 27 are loosely mounted on each spindle 18 and carry discs 20, 22, which are in frictional contact through the spring 44. The discs 20, 19 are similarly connected by the weaker spring 21. The discs 20, 22 each carry a tooth 70, 71, the tooth 70 engaging a fixed pin 33 or a movable pin 32. The outer sleeve 27 carries teeth meshing with those of a rack 35 which actuates the machine, and also bears the loose toothed ring 23, which rotates with the ring 27 when a pin 28 and tooth 29 are in contact. The spindle 18 is fixed to two toothed wheels 24, 25, the latter of which carries a projection which actuates the tens-carrying device and a tooth 30. The carrying-device consists of a sleeve having three discs 41, 42, 43. The disc 43 has four arms and is driven by the projection; the disc 42 has four pairs of teeth meshing with those of the ring 23, and the disc 41 has four teeth which drive the wheel 24. The piece 50 with its locking-springs 73, Fig. 3, is moved by the rod 36 and its lever 45, Fig. 2, which moves also the band 37 with its studs 38, used for returning the figure discs 19 to zero. The multiplier-indicating disc 57 is shown in Fig. 7, and receives motion from the upper wheel 65 of three wheels 65, 64, 63. The wheel 63 has eight teeth, and is moved by the projection 71 of the disc 22. The wheel 64 has four grooves, into which one of the spring pawls 68 may fit, and the wheel 65 carries four teeth. The device shown in Fig. 3 for returning the multiplier-indicating disc to zero consists of the plate 58 carrying the loose toothed wheel 52, which is slotted eccentrically and driven by the rack 53. The wheel 52 carries a pin 55, and the disc 57 carries a corresponding lug 56.

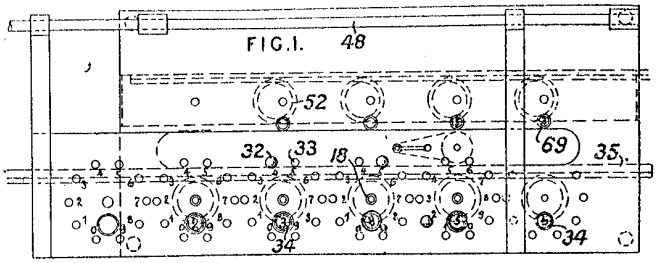

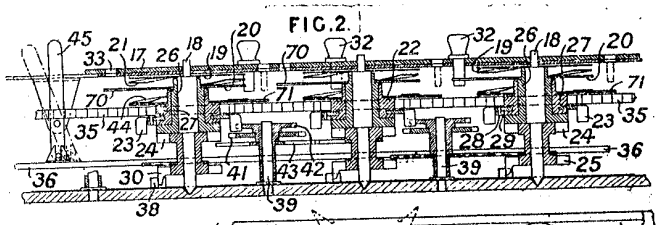

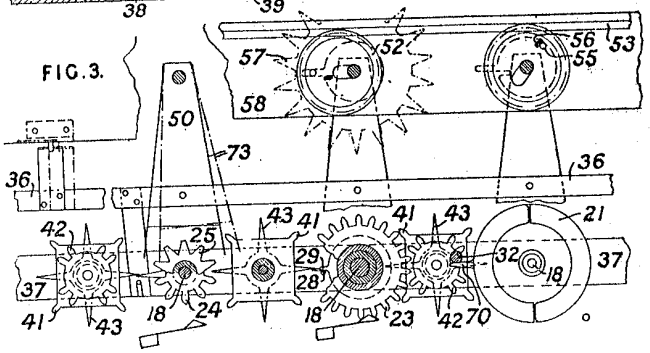

The spindle of the disc 57 passes through a hole in the plate 58, this hole having a tooth projecting

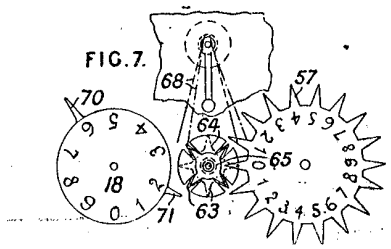

radially inwards and a groove projecting outwards. The machine is covered by a lid 17, which rotates about or slides along the rod 48.

More omitted

Levi M 14635/1898 Computing scale length, area

14,635. Levi, M. July 2.

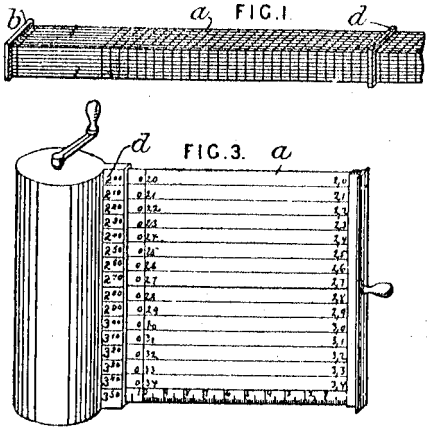

Measures of length; computing-scales.—The four sides of a rule *a* are marked with a continuous scale of areas terminating in a scale of lengths. On the rule works a slide *d* marked on its four sides with a continuous scale of lengths. When the rule is laid across a board or the like with the flange *b* at one edge and the slide *d* pressed against the other, the area of the board can be read off directly from the rule opposite the graduation on the slide giving its length. In Fig. 3, a modified form is shown, in which the scales of areas and lengths are set out on a tape *a*, and the reading is taken opposite the number on the scale *d* showing the length of the board, the tape having been drawn out to its breadth.

Levin J L 6717/1906 Key set adder

6717. Levin, J. L. March 20.

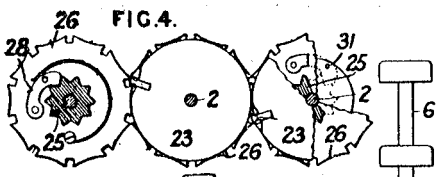

FIG. 4.

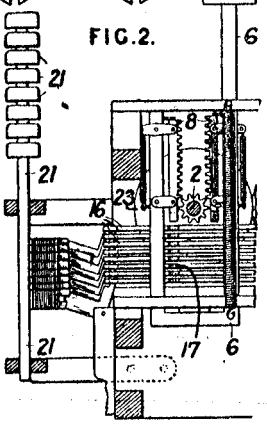

FIG. 2.

Calculating - apparatus; counting apparatus.— In key-set-and-operated single-bank adding-machines, the counting-spindle for each denomination has its own pair of keys, one for addition and the other for subtraction, by which alone it can be operated, the single bank of digit keys merely determining the stroke of any denomination key, thus introducing a differential motion. The pinions upon the main counter spindles 2 are rotated in opposite directions by the two spring-controlled plunger keys 6 of each pair, for which purpose one of the keys is bent twice at right-angles, and the actuating racks 8 are pivoted to the keys at the lower end and to spring-controlled levers thereon at the upper, whereby the resistance of the counter detents is sufficient to press a rack back out of gear during the return stroke. Each of the eight digit keys 21 slides its own spring-controlled bar 16 to the left, so that the lug upon a descending rack has no longer a free path through the slots 17 as shown but is arrested at a point depending upon the value of the digit key. Transfer mechanism of the single-tooth and geneva-lock type is shown in Fig. 4. The wheels 23 which carry the single tooth are fast upon the counter spindles, and drive the loose locking-wheel 26 of the higher order, which carries its spindle and numeral wheel with it by means of the pawl and detent wheel 28, 25; except during transfer the locking-wheel is held fast, and the spindle moves round independently thereof. To lock all the counter spindles to the locking-wheels and thus to hold them absolutely safe during actuation, a sleeve upon each spindle normally passes a pin 31 through the locking-wheel into the pawl; but a descending key displaces the sleeve by cam and slide action.

Lewthwaite J 11812/1847 Numbering machine Chrono

LEWTHWAITE. 23rd July 1847.

11,812. A grant unto JOHN LEWTHWAITE, of Halifax, in the county of York, gentleman, for his invention of "Certain improvements in numbering machines"; 6 months.

4 R 2

From the full patent Text Ocr and drawing.

I, John Lewthwaite, hereby declare that the nature of my said Invention consists in certain improved modes of constructing, placing, adjusting, and gearing the numbering and driving wheels of the machines used for numbering railway and pawnbroker's tickets, paging books, and other like purposes, and in certain improved modes or means of regulating the action of the same, whereby such machines are enabled to imprint numbers in any consecutive or alternating, or other serial order which may be desired, in a more ready and effectual manner than has been ever, to the best of my knowledge and belief, heretofore accomplished. And I declare, that the manner in which the said Invention is carried into effect is exemplified in the Drawings hereunto annexed, reference being thereunto had, and in the following description and explanation thereof, that is to say :

Figure 1 is a side elevation of what I call a " figure wheel," detached from the other parts of the numbering machine. It has ten cogs, on the ends or faces of which are ten figures from 0 to 9, either punched out or let in in relief. The number of these wheels employed in one machine may vary according to the extent to which the consecutive or alternating or other serial numbering is required to be carried.

Figure 2 is an edge view of four such wheels attached to one shaft A, which, supposing the numbers to be imprinted in their natural sequence, would together number from 1 to 9,999. Each wheel is made to turn freely on the axis A, independent of all the others.

Figure 3 is a side elevation of what I call a " driving wheel," there being one such wheel for every figure wheel employed in the machine. It carries ten cogs, the same as the figure wheel, but these cogs; instead of being flat at their ends or faces like the others, are made of a concave form, as shewn. A circular portion a^1 is cut out of the body of the wheel, so as to leave a round rim a^2 all round, except at b, where the rim is cut through for a space equal to the width of the space between two of the cogs.

Figure 4 shews four such wheels mounted on one axis B, to correspond with the set of four figure wheels represented in Figure 2. Each of these driving wheels turns freely on the axis B independently of the others, in the same way as the figure wheels. When these figure and driving wheels are fixed in the machine they are so placed in respect to one another that the cogs of each driving wheel shall take into the spaces between the cogs of the corresponding figure wheel, so that motion being given to any one of a set of driving wheels it shall transmit that motion to its corresponding figure wheel, and the motion of these two wheels be independent of all the other wheels excepting only in the special case or cases herein-after provided for

.Figure 5 is a side view of a key stop which is employed to regulate the movements of each driving wheel, there being one such key stop for every wheel, and all the key stops required for any set of wheels being attached to one bar C, on which they vibrate or rise and fall freely independently of one another, except as is herein-after shewn.

Figure 6 is an edge view, and Figure 7 a plan, of five such key stops applied to one axis. When fixed in the machine these key stops are so placed in respect to the driving

wheels that whether any one of the driving wheels is by some rotary or other movement brought into contact with its corresponding key stop, or that the key stop is by some similar movement brought into contact with its driving wheel, the effect shall be to cause the driving wheel to move a distance of one cog and no more round its axis. These key stops are all of the form shewn in Figure 5, that is, of a pointed and somewhat conical form at the wheel end m,, with a bracket piece e, except only the key stop for the unit wheel of each set
5 of driving wheels, which, as shown in Figures 6 and 7, has the pointed end cut short off, and has no bracket piece e.
Supposing a machine to have four figure wheels, four driving wheels, and four key stops,' as represented in Figures 2, 4, and 6, then e^{l} would be the unit key stop, c^{2} the unit driving wheel, and c' the unit figure wheel. The next set in succession, marked d^{l}, d^{2}, d^{3}, would be the ten key stop, the ten driving wheel, and the ten figure wheel ; the next adjoining set, marked e', e2, e3, would be the hundred key stop, the hundred driving wheel, and the hundred figure wheel, and so on with any number of wheels and key stops, which may be mounted in one machine. The bar which carries the key stops is firmly attached to the bed
'5 of the machine in such a position that as the driving wheels revolve the key stops shall take into and out upon them at certain fixed intervals in the manner to be next explained. Thus supposing the cypher cog of the unit figure wheel cl is brought into any position required for pointing them, the driving 'wheel c2 will, by successive actions of the flat-faced key stop el upon it, cause
10 the figure wheel c3 to exhibit and print the numbers 1 to 9 in regular sequence. By continuing the revolution of the driving wheel 0, the cypher cog is brought round again into its primary position, but simultaneously therewith the notch or open space b in the raised rim a2 of the driving wheel c2 comes opposite the pointed key stop al of the ten series, when the conical end rn of that stop
$5 enters the notch and brings its flat shoulder part n into such a position in respect of the ten driving wheel as to move it round one cog, when the
combination of the unit and ten figure wheels will exhibit the number 10. The ten figure wheel c^{d} now remains stationary, till the unit figure wheel c^{3} has made a second revolution, and exhibited a second series of the numbers
1 to 9, when the notch *b* once more presents itself, and the conical end of the key stop d^{l} dropping into it, causes the ten wheel d^{2} to be once more acted upon as aforesaid, and to exhibit the number *2.* And so the operation goes on till. the combination of the two sets of wheels and key stops c^{1}, c^{2}, and d^{l}, *d'* exhibit the number 99. The notch *b* in the ten driving wheel is then presented to the conical end of the key stop e^{l} of the hundred set, which brings that set next into operation to play the same part in relation to the ten set which the ten set did in relation to the unit set. When by the combination of the three sets of key stops and wheels, the number 999 has been reached, the conical end of the thousand key stop f^{l} drops into the notch b of the hundred driving wheel e^{2}, and brings the thousand driving wheel *f2* into play in the same manner as the others. The operation then goes on as before, until the number 9,999 is attained. From what has been stated it will be readily understood that in all positions of each of the driving wheels, except that only when the notch *b* presents itself, the continuous part of the projecting rim a^{2} presses against the end *of* the key stop of the next adjoining driving wheel, and pushes it down out of the way so as to prevent its interfering with the action *of* the wheel, which is immediately in work. Each key stop has a spring s attached to it, which imparts to it the requisite degree *of* reaction the moment the pressure on it is removed. As the numbers on the ten figure wheel are only required to

be brought into use once in each successive revolution *of* the unit wheel, and the same is the case with the hundred wheel in relation to the ten wheel, and with the thousand wheel in relation to the hundred wheel, each wheel is held fast during its period of inaction by means of a catch, a side view of which is given in Figure 8, the outer end of which takes into the concave faces of the cogs of the wheel. When these catches are out of action their outer ends fall into or coincide with the vacant spaces between the cogs. Thus when the unit wheel only is at work, the catch belonging to it will always take into or coincide with one *of* the vacant spaces between the cogs of that wheel, while the catches belonging to the three other wheels will each rest in the concave face of one or other *of* the cogs *of* its particular wheel. The ten, the hundred, and the thousand wheels are each released in succession in manner before explained. The brace piece *e of* the ten key stop projects over the hundred key stop, and that of the hundred key stop over the thousand key stop, all as represented in the Plan Figure 7, so that when any one of these key stops is pushed out of action in the manner already described, the brace piece attached to it causes it to carry along with it all the following key stops. The catches (Figure 8) serve also not only to bind the wheels firmly and to prevent any striking of them during the act of printing, but to prevent them from being moved more than one cog at each action of the key stop.

The manner in which any number of figure wheels and key stops, such as have been thus individually described, may be made to act in unison, is exemplified in Figures 9, 10, 11, 12, 13, and 14. Figure 9 is a side elevation of a numbering machine of five sets in its complete state, including the printing appendages (as to which last, however, I claim nothing new) ; II is a chase or frame, which carries the whole of the numbering parts, with the exception of the stops, and slides in V grooves on to a bed L, on which it is made to move to and fro by means of a rack p and wheel q. A top plan of the chase H, as resting on the bed L, is given in Figure 10, and a sectional elevation of it, and of the bed L, in Figure 11. The top of the chase has openings K, K, in it, up through which the number cogs of the figure wheels slightly project. The wheel *q,* which works the rack *p,* which moves the frame II to and fro, is worked by a crank handle R. Figure 12 is a plan of the driving wheels, figure wheels, and key stops, detached from the other parts of the apparatus. The wheels are carried by the frame H, as shewn in the sectional elevation, Figure 11, but the key stops are permanently attached to one end of the bed L. Figures 12 and 13 are side views of the driving and figure wheels, shewing how they gear into one another, those marked W' being the driving wheels, and those marked W^2 the figure wheels. From these Figures it will be seen that the wheels are so geared as to produce a simultaneous action on all the sets. G, G (Figure 9), are feeding tubes by which the paper or other material on which the figures are to be printed is supplied to the machine, and conveyed between the printing roller R and the top of the figure frame H. As soon as printed it is discharged from the opposite sides of the roller R in the direction T. The inking of the projecting figures of the wheels W^L is effected by means of suitable rollers mounted in the frames V, V, one of which is shewn in section in Figure 9, and these wheels are put in motion by the series of toothed wheels X, Y, Z, the first of which is attached to the same axis as that which carries the rack wheel q.

In the machine just described only five sets of figure wheels and driving wheels, with one set of key stops, are employed, but I find it preferable in practice to use ten sets, and to arrange the unit wheels in a sequence from 0 to 9. With the figure 1 on each of the ten wheels I get numbers from 10 to 19 ; with the next change, the numbers from 20 to 29, and so on, the figure wheel always remaining stationary. But in order to effect this (supposing the numbers are to be printed in their natural consecutive

order), it is necessary that the key stops should be moved laterally till the unit key stop is withdrawn
from acting on the unit driving wheel, and made to act on the ten driving wheel, which then becomes the unit driving wheel in respect of all the consequent changes. But should it be required that each figure wheel shall commence with a different number from the others, or that separate portions of the series of natural numbers shall be exhibited simultaneously, then the ten stops must preserve their original position, and this rule will hold, whether the number of wheels in the machine is ten, fifteen, twenty, or any greater number. When a machine of this description is employed to page account books, and others in which case it is requisite to exhibit first all the odd numbers of the unit wheel, for the purpose of figuring all the right-hand pages, and next all the even numbers for the left-hand pages, or vice versa, I accomplish this by adding to the unit key stop (e[l]) a supplementary prong o, as represented in clotted lines in Figure G, placed at a distance before the principal conical end m, equal to the breadth of one of the cogs. Every time this double key stop acts on the unit driving wheel it moves two cogs instead of one as before, so that, according as the wheel may be adjusted at starting, the key stop will cause it to exhibit only odd or even numbers. All the other key stops will of course act as usual. Instead also of each figure wheel exhibiting on its cogs the numbers in their natural sequence, they may be exhibited in any order which may be desired ; and further, instead of the usual Arabic numbers being used, letters may be substituted for them according to the Roman method of notation, or any other signs or symbols substituted expressive of numbers.

And having now described the nature of my said Invention, and in what manner the same is to be performed, I declare that I lay no claim to the use of figure wheels for numbering, acted on by means of driving wheels and stops, but that the improvements which I claim as constituting my said Invention are as follows :

First, I claim the employment in numbering machines of driving wheels of the peculiar construction before described.

Second, I claim the employment in such machines of stops formed and placed, in regard to the driving wheels, as before described. And,

Third, I claim the improved mode of placing, adjusting, and gearing, driving and figure wheels. as before described.

FIG. 1.

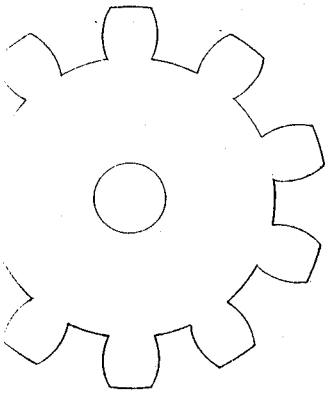

FIG. 2.

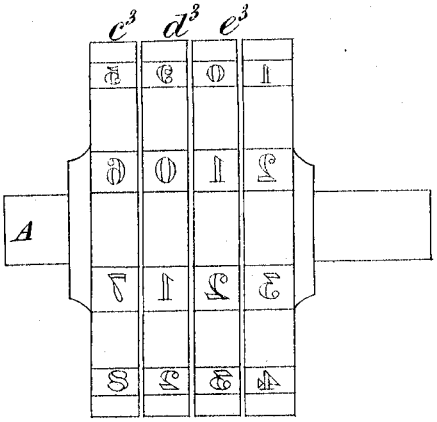

FIG. 3.

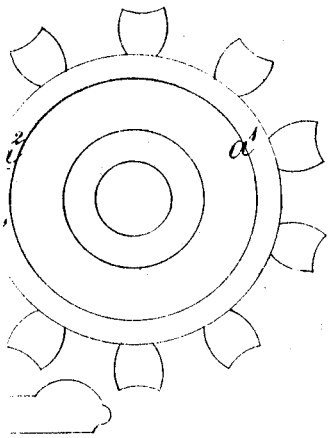

FIG. 4.

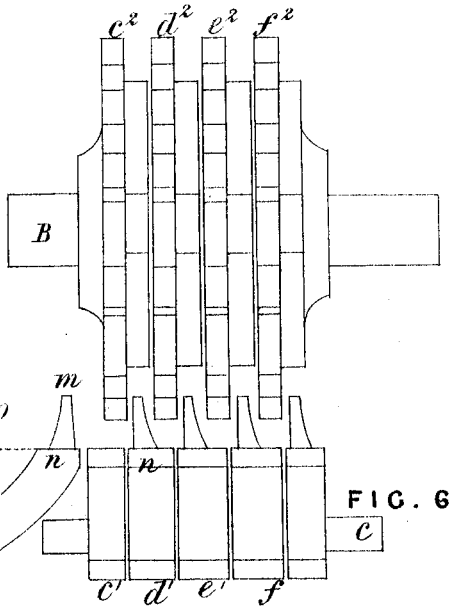

FIG. 5.

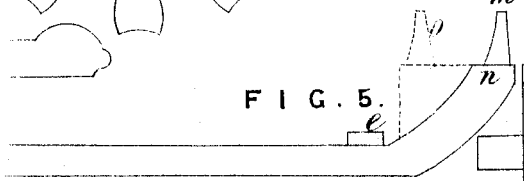

FIG. 6.

FIG. 7.

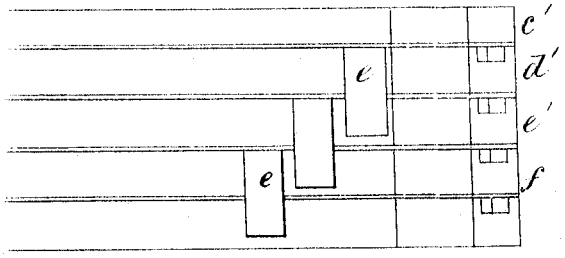

FIG. II.

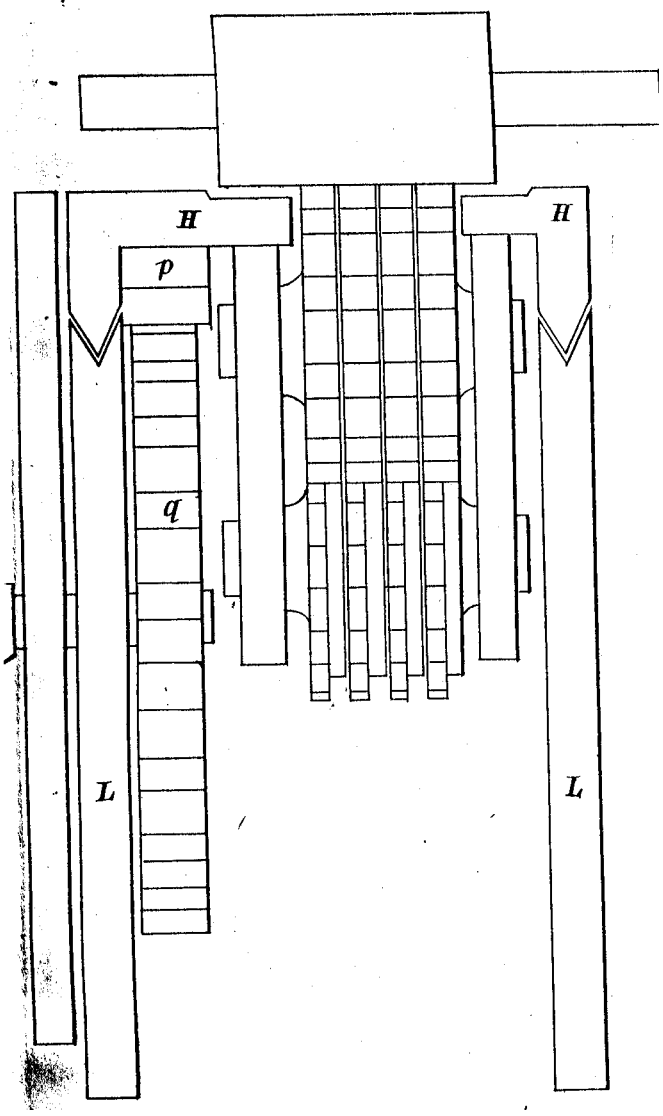

FIG. 12.

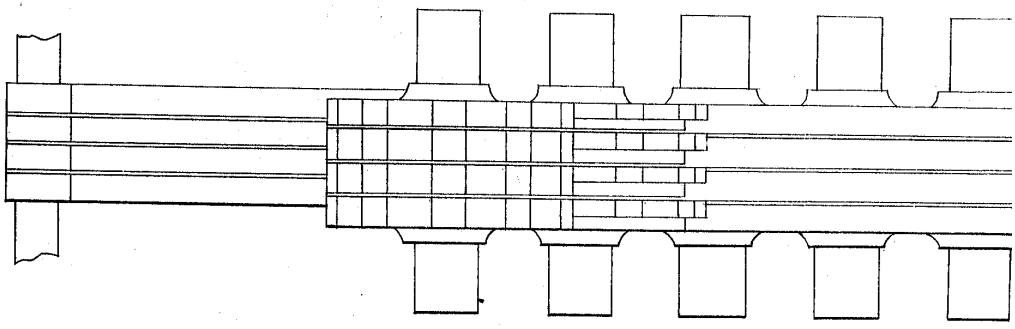

FIG. 13.

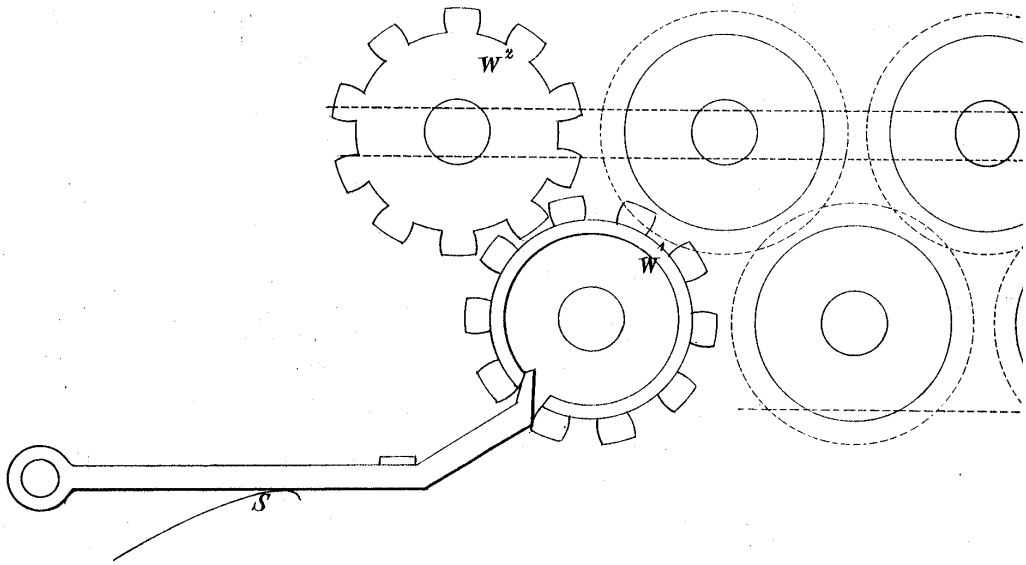

Liegrist M 1121/1857 circular adder for measurement of timber

A.D. 1857, April 21.—N° 1121.

NEWTON, ALFRED VINCENT. — (*A communication from M. Liegrist.*) — (*Provisional protection only.*) — "Improvements in "rules and other measuring instruments."

"One of the forms which may be given to the instrument is "that of a box tape, which will permit of the application of the "invention to the measurement of timber in forests. One of the "scales on the tape is to be divided as usual into feet and inches "for the purpose of giving the direct measurement of the circum- "ference of circles. A second scale will shew their diameters by "its corresponding divisions, and a third scale will give the "superficies or areas of the circles, of which figures of the second "scale shew the corresponding diameters.

"The other side of the tape may contain a scale which will give "in inches and fractions of inches, and feet and fractions of feet, "the cubes of the cylinders, of which the other scales give the "diameters and areas.

"The arrangement of this instrument will therefore allow of "the linear and cubical dimensions of a cylinder being estimated, "by measuring either its circumference or its diameter; it is "consequently well adapted for measuring uncut timber.

"The same principle of corresponding graduations may also "be applied to a rigid rule, and also to other similar instruments, "and the scales may be modified to suit various kinds of measure- "ments. The number of scales may also be increased, giving, "for instance, the homologous proportions of other similar "geometrical solids, such as spheres and the different poly- "hedrons."

[Printed, 4*d*. No Drawings.]

Lilly W E 28603/1912 Spiral slide rule

28,603. Lilly, W. E. Dec. 11.

FIG. 1.

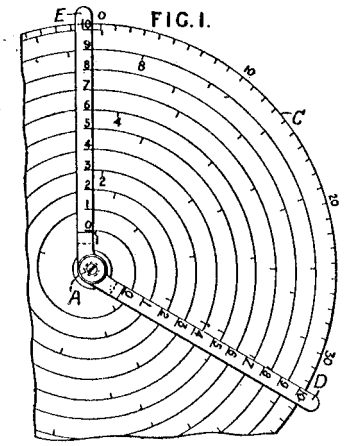

Logarithmic calculators. — In apparatus in which the logarithmically-divided scale is set out on a disk or cone C in a spiral or set of concentric circles, one or more radial arms D, E, frictionally held to one another, are pivoted on a pin A at the pole or centre and are graduated to correspond with the number of convolutions or circles of the scale starting from zero. The logarithm of any number may be found by placing one of the arms at the number on the scale; the number of the convolution

500 [illegible]

indicates the first figure of the mantissa and the next figures are indicated by the intersection of the arm with a decimally-divided scale around the circumference of the disk. Multiplication is effected by placing one arm at unity on the logarithmic scale and the other at the multiplicand. The first arm is then turned, carrying with it the second arm, until it reaches the multiplier. The first figure of the mantissa of the product is calculated mentally and the product is read off at the intersection of the second arm with the corresponding convolution. The scale may be also graduated to indicate trigonometrical functions, and the disk may be provided with a handle. In modifications, the scale and radial arms extend over both sides of the disk, or the arms may be provided with a fine thread stretched on a radial line or otherwise shaped to facilitate the reading of the scales.

Lilly W E 23968/1914 Cylindrical slide rule

23,968. Lilly, W. E. Dec. 12.

Slide-rules.—A cylindrical rule is marked with two similar sets of scales A B C D, E F G H, shown developed in Fig. 2, and is provided with a slide comprising a transparent tube T, Fig. 1, graduated with one or two sets of scales exactly similar to those on the cylinder. Each set comprises ten scales equispaced round the periphery and is divided proportionately to the logarithms of the numbers from 0 to 1; the sets are displaced relatively a distance equal to that between the scales. The spaces between the scales are of such a width that the scales on the tube may fit in between those on the cylinder; the logarithms of the numbers on the cylinder and of trigonometrical funct may be marked between the scales. A cu in the form of a second short tube slidin the tube T, may be fitted.

FIG. 1. T



FIG. 2.

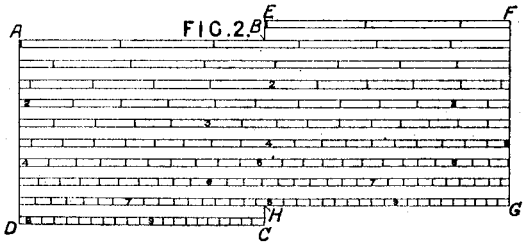

Lindholm P T 7974/1886 Adding machine

7974. Clark, A. M., [*Lindholm, P. T.*]. June 15.

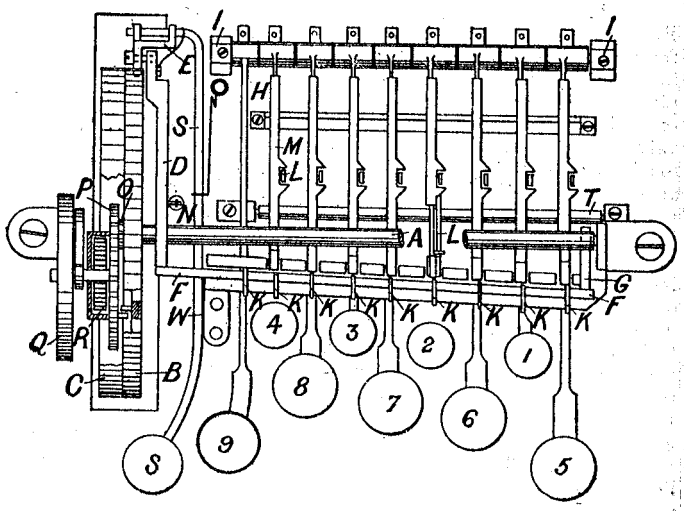

Calculating-apparatus. — Relates to adding-machines. On a shaft A rides loosely a ratchet-wheel B of a hundred teeth and having a projecting flange C marked with the consecutive numbers from 1 to 100. A lever D fastened to the shaft carries on the long arm a pawl E, which engages with the ratchet-wheel, while its short arm is attached to a bar F running across to another arm G projecting from the shaft. Beneath the bar F are nine numbered key levers H, pivoted on a shaft which is mounted in bearings I. The depression of any one of the keys brings down the bar F by means of hooks K and by bell-crank levers L pivoted on a shaft T moves forward horizontal bars M, so that their ends comes under the bar F and limit its descent. The thicknesses of the ends are such as to cause the pawl E to take up as many teeth as the number on the key depressed. On releasing the key the ratchet-wheel is advanced by the return of the lever D under the influence of a spring N. A pinion O attached to the ratchet-wheel gears with a spur-wheel P the spindle of which carries a wheel Q having numbers on its rim for showing the turns made by the ratchet-wheel, *i.e.*, the hundreds counted. The wheels are covered by a casing in which is a slot for exposing the numbers. The working winds up a spiral spring R by which the wheels are returned to zero on disengaging the pawls by a key S pivoted at W.

See US Pat 343770 of 1889 for details

Linzel C 12289/1899 Bending moments of girders

12,289. Linzel, C. June 13.

FIG. 3.

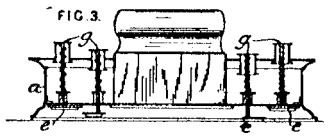

Calculating-apparatus.—The apparatus consists of a casing *a* carrying a number of spring hand-stamps *e*, on which are marked the profiles of various girders, with the dimensions, height, width, and thickness of web and flanges. Adjacent to the press-buttons *g* are marked numbers representing the moments of resistance. Thus, when such a moment has been determined, the corresponding stamp can at once be selected and the girder profile and its dimensions stamped on the drawing.

Lippincott A C 22193/1896 Planimeter for indicator diagrams

22,193. Lippincott, A. C. Oct. 6.

Calculating apparatus.—Relates to planimeters more especially for use upon indicator diagrams. The bar B has a pointed centre b^2 at one end about which it turns, and at the other is pivoted by a hollow screw b^1 to the block A through which the tracer bar a can slide for adjustment. A depressible spring point b^4, operated by the head b^5, is employed to fix the bar B while the tracer b is being set at a distance from the fulcrum b^1 equal to the length of the diagram. The tracer bar when adjusted is secured by a screw a^1. The wheel C is mounted by a hub d upon a glass tube d^1 closed at its ends and containing the scale printed on a paper strip. In this way the scales are unaffected by changes of atmospheric conditions. The tube d^1 is secured to the block A by inserting it in a split sleeve d^2 so that the scales are readily interchangeable. Detail may be modified.

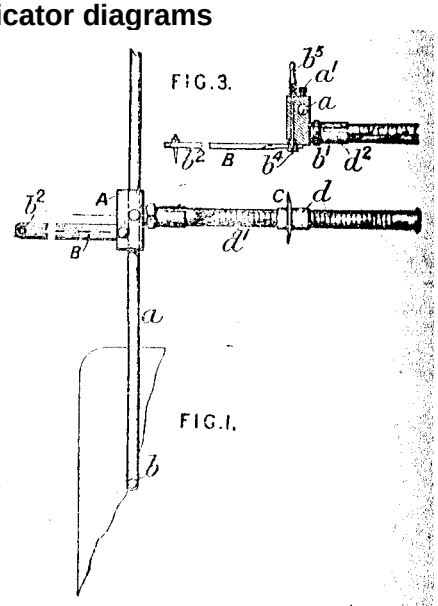

FIG.1.

Little E de L 17175/1891 Convert quantities

17,175. October 9, 1891. **Computing scale.** E. DE L. LITTLE, The Mount, Northallerton.

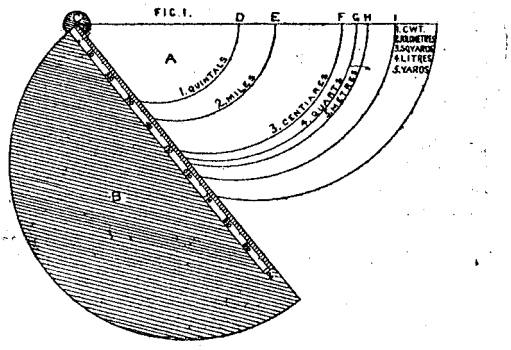

To convert quantities of one system into those of another. Two superposed semicircular plates A, B are pivoted together at one extremity C. The plate A shows a series of semicircles struck on different diameters CD, CE,.....CI, whose ratios to the last one CI are iniversely the ratios of the units of the different systems. The units represented by the semicircle on C, I are marked and numbered against it, while the corresponding units with which they are compared are marked and similarly numbered on their appropriate semicircles. The plate B is graduated along its diameter as far as the point I. Its readings, where cut by the other semicircles convert the simultaneous readings of the semicircle I.

Lock, Pollen & Barr 6838/1902 Solve triangles

6838. Lock, W. H., Pollen, A. H., and **Barr, M.** March 20.

FIG.1.

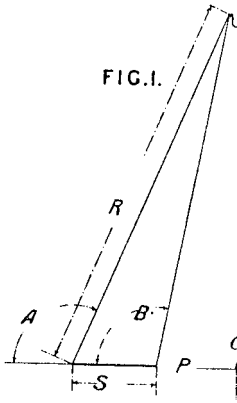

FIG.2.

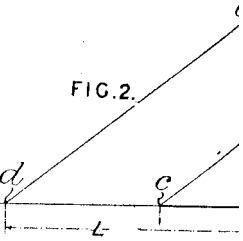

FIG.5.

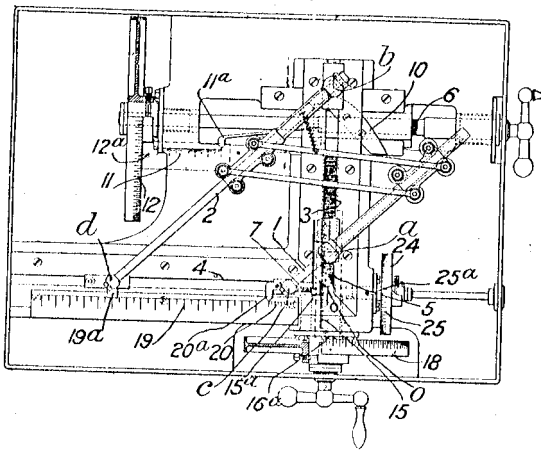

Calculating-apparatus. — Relates to mechanical apparatus for the determination of the linear elements of triangles for telemetrical purposes, which is based upon the following trigonometrical principles. In the triangle, Fig. 1 :

$$R = \frac{S. \sin B}{\sin (A - B)}.$$

If now, Fig. 2, along the axes O P, O Q lengths *o c*, *o a*, *o b* are set off, equal respectively to constant multiples of the quantities S, sin (A — B) and sin B, then, by drawing *d b* parallel to *a c*, the length L will vary as the length R, *i.e.*, if R is the distance of an object E from the base line S, it can be determined from the length L. The solution is effected mechanically by the apparatus shown in Fig. 5. In grooves 3, 4 the pivots *a*, *b*, *c*, *d* of two bars 1, 2 are adapted to slide and be adjusted. These bars are constrained to move parallel to one another. Since in practice the angle A–B is never more than about 36′, the distance *o a* is set off against an angular scale 15 by means of a screw 5 and micrometer head 18 acting directly on the pivot *a*. In the case of the pivot *b*, however, used

Longacre M R 11297/1889 Cash register

11,297. Longacre, M. R. July 13.

Calculating - apparatus; counting - apparatus; receipts, checking.—Relates to indicating and registering or adding machines, more particularly adapted for indicating the cash amounts of sales &c. Fig. 1 shows a sectional elevation of the apparatus, which is similar for each adding-wheel. A plate B has edge teeth at one end, gearing with a spur-wheel urged in the direction of the arrow by a coiled spring F. Operating-keys are arranged above the plate B, each of which, when depressed, comes into the path of a shoulder *s* on the plate, and determines its movement. One of the keys has a lug *i*, which locks the slide.

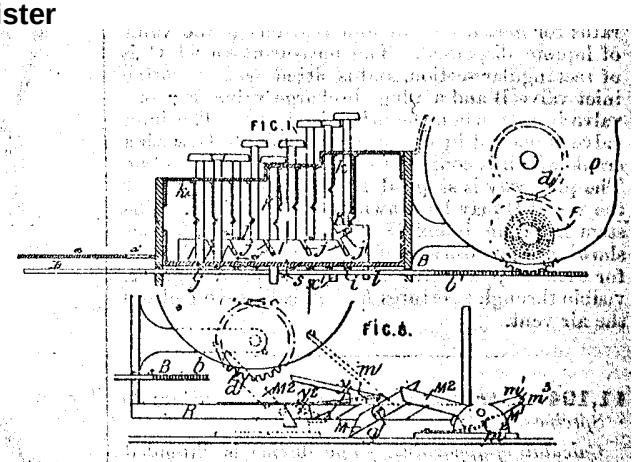

When another key is depressed, this is raised as follows:—A pin *k* on the depressed key taking into an inclined slot *j* shifts a slide I to prevent the operation of other keys, and an upward slot j^1 in the slide raises the locking-key. The plates B and slides I are pushed back by a sliding frame, having pegs which catch lugs x^1 and *l*. The movement of the slide restores the keys and nosed springs *k* uphold them. A money drawer may be attached to the sliding frame. A spur-wheel gears with another *d* attached to an indicating-wheel D. The indicating-wheel drives the adding-wheel by a ratchet-carrying device. Fig. 8 shows an elevation. A pin on the adding-wheel, from which a number is to be carried, strikes an arm *m* projecting from a switch M in a fixed rail R. The frame q^1, which restores the plate B, bears a dog M with a tail cocked by a spring m^2 and crossed by a bent finger m^1, m^3, which runs over the rail R. When the finger meets the switch it ducks under the rail, and tilts the dog into position for advancing the next adding-wheel. The finger rises above the rail again through a notch y^2. A notch *y* prevents partial actuation only.

Longini H E 23804/1905 Adder

23,804. Longini, H. E. Nov. 18.

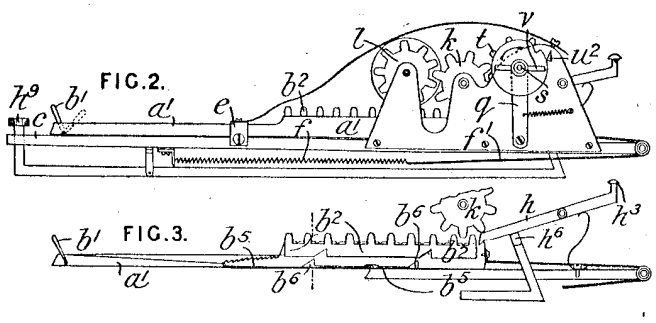

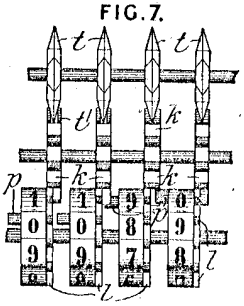

Calculating-apparatus; counting-apparatus.—The setting is effected by digit-bearing straight spring-controlled bars, one for each denomination, each of which is moved over a graduated table, shows the digit set through an item aperture, and causes its operating-rack to move into gear with a transmission wheel for the corresponding element of a totalizing-counter provided with transfer mechanism of the single-tooth variety and with zeroizing apparatus in which the first motion of the zeroizing-handle throws the required parts into gear, a mutilated gear-wheel determining the zero point. The racks may be restored either collectively for the next item or singly for erasing, and printing-parts may be added. Fig. 2 shows one of setting-bars a^1 in side elevation, the apparatus being adapted for use in either the vertical or horizontal position. Normally, the spring and cord f, f^1 keep it fast against the cross-piece e through one of the item apertures in which "0" is displayed, but to set, the bar is pulled out by means of its handle b^1 to a position determined by digits upon the fixed table c, the motion of the handle simultaneously lifting up the actuating-rack b^2 within, by means of motion given to the sliding piece b^5 with inclines b^6, as shown in Fig. 3, the inclines moving out of the recesses in the rack with which they usually register and forcing it upwards. Return of the setting-bar is prevented by ratchet teeth thereon and a pawl h which may be displaced for any single bar by the button h^3 or collectively by a yoke h^6 and its operating-key h^9. Motion is transmitted from the racks through the wheels k to the numbering wheels l of the counter, which carry transfer pins p co-operating with the transmitting-wheels as shown in Fig. 6. In zeroizing, a winged handle v upon the spindle s is turned and displaces the spindle forwards by means

© B O B Williams Printed22/11/2023 CalcPatents Ed. 1.doc

Lorens C 11807/1887 Multiplying slides or cylinders

11,807. Thompson, W. P., [*Lorenz, C.*]. Aug. 31.

Calculating-apparatus to facilitate multiplication and division. The Figure shows a plan of the apparatus. A, A are cylinders arranged in rows, each row standing one cylinder further to the left than the row above it. Rings of figures run round one half of every cylinder, showing the units of the products of the nine digits and zero by the numbers of the rings (consecutively numbered); rings round the other half of the cylinder show the tens of these products. The cylinders are turned by racks B, B, so as to bring different longitudinal lines of figures to the top. Above the cylinders is a series of slides C, C pierced with holes D for reading the units of the top line of figures, and with holes E for reading the tens. The modes of using will be best understood from an example. To multiply

534 × 37. Three of the slides G, in order right to left, are drawn so that they read respectively the 5th, 8th, and 4th rings of figures. Two racks B are drawn to bring the 7th and 3rd lines of

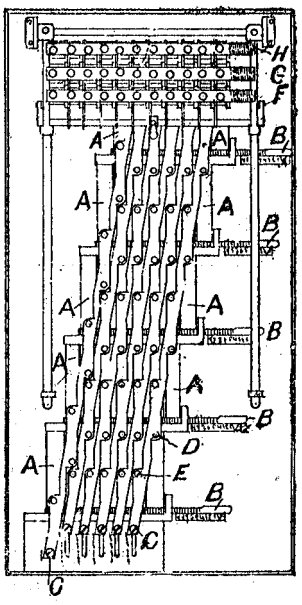

figures uppermost. Then the four numbers visible in the four sets of corresponding holes of the three slides are added thus :—

568	}	on cylinders showing 7th lines.
352		
542	}	on „ „ 3rd „
121		
21608		

Slides may also be used instead of the cylinders. For division there are two axes F, G carrying reels, each marked round with the digits and zero. The two axes may be placed with their reels in frictional contact; then turning up the product of divisor by quotient on one axis gives the remainder on the other. The rows of cylinders are used successively from the bottom, so that the quotient is shown by the racks. The dividend is shown permanently on a third axis H.

Lord L 22210/1892 Textile circular slide rule. Full
See **[24]**

N° 22,210 A.D. 1892

Date of Application, 5th Dec., 1892
Complete Specification Left, 16th Aug., 1893—Accepted, 7th Oct., 1893

PROVISIONAL SPECIFICATION.

Improvements in Apparatus for Effecting or Facilitating Arithmetical Calculations.

I, LAWRENCE LORD of 66, Devonshire Road, Burnley, in the County of Lancaster, Mill Manager, do hereby declare the nature of this invention to be as follows :—

My improved apparatus or calculator consists of a system of dial plates and concentric rings or circles, having graduated scales marked upon them, and are designed to act after the manner of the ordinary slide-rule, but on a far more extended scale.

By preference, I employ two concentric rings or circles. The outer one is fixed and stationary, whilst the inner one is movable, and within the inner circle is a movable dial-plate. The fixed and movable rings or circles have near their inner and outer edges, suitable scales of gradations ; those on the inner edge of the stationary ring corresponding with those on the outer edge of the inner or movable ring or circle. The gradations on the inner edge of the inner ring are similar to those on its outer edge. The dial-plate is also provided with suitable gradations on its outer edge, more especially for obtaining values ; and to the outer edge of the said dial plate is fixed at a determined point, say No. 1 of the gradations, a fine finger or pointer with its point extending across the movable ring or circle on to the fixed or stationary one.

Another pointer is employed projecting from the centre and extending across the surface of the dial-plate and the rings or circles, which are all in the same plane.

These scales or gradations are intended for general calculation, such as multiplication, division, proportion, involution, evolution, &c.

The whole is enclosed in a metal framing or case, like that encircling the movements of a watch.

The centre-finger, the inner ring and the dial-plate are each respectively actuated by a milled knob, to which is attached a small spindle and pinion. The small spindle belonging to the inner ring passes through the neck or pendent of the casing, and forward to a crown wheel or other suitable gear on the back of the said ring, which it actuates by means of a pinion or the like. The milled knobs for actuating the dial plate and the centre pointer are preferably situated one on each side of the pendent, their respective spindles passing through the casing, whilst their pinions act upon crown wheels, or other suitable gear, fixed to the centre pointer and centre dial.

The apparatus is specially adapted for calculating, in textile industries, the quantities of weft, warp reed, pick, counts, length and value.

On one portion of the fixed ring or circle may be a double scale, which is used specially for per centages in getting warp and weft.

Dated this 3rd day of December 1892.

THOS. RICHMOND,
Agent.

© B O B Williams Printed22/11/2023 CalcPatents Ed. 1.doc

COMPLETE SPECIFICATION.

Improvements in Apparatus for Effecting or Facilitating Arithmetical Calculations.

I, LAWRENCE LORD of 66, Devonshire Road, Burnley, in the County of Lancaster, Mill Manager, do hereby declare the nature of this invention and in what manner the same is to be performed, to be particularly described and ascertained in and by the following statement :—

My improved apparatus or calculator consists of a system of dial plates and concentric rings or circles, having graduated scales marked upon them, and designed to act after the manner of the ordinary slide rule, but on a far more extended scale.

By preference, I employ two concentric rings or circles. The outer one is fixed and stationary, whilst the inner one is movable, and within the inner circle is a movable dial-plate. The fixed and movable rings or circles have near their inner and outer edges, suitable scales of graduations ; those on the inner edge of the stationary ring corresponding with those on the outer edge of the inner or movable ring or circle. The graduations on the inner edge of the inner ring are similar to those on its outer edge. The dial plate is also provided with suitable graduations on its outer edge, more especially for obtaining values, and to the outer edge of the said dial-plate is fixed at a determined point, say No. 1 of the graduations, a fine finger or pointer extending across the movable ring or circle on to the fixed or stationary one.

Another pointer is employed, projecting from the centre and extending across the dial-plate, and the rings or circles, which are all in the same plane.

These scales or graduations are for general calculations, such as multiplication, division, proportion, involution, evolution, &c.

The whole is enclosed in a metal framing or case like that encircling the movements of a watch.

The centre finger, the inner ring, and the dial-plate are each respectively actuated by a milled knob, to which is attached a small spindle and pinion. The small spindle belonging to the inner ring passes through the neck or pendant of the casing and forward to a crown-wheel or other suitable gear on the back of the said ring, which it actuates by means of a pinion or the like. The milled knobs for actuating the dial-plate and the centre pointer are preferably attached one on each side of the pendent ; their respective spindles passing through the casing, whilst their pinions act upon crown-wheels, or other suitable gear, fixed to the centre pointer and centre dial.

The apparatus is specially adapted for calculating in textile industries the quantities of weft, warp, reed, pick, counts, length and value.

On one portion of the fixed ring or circle may be a double scale, which is used specially for per centages in getting warp and weft.

In the accompanying drawings,

Fig. 1, Sheet 1, is a plan view of my improved apparatus or calculator on a large scale in order to shew clearly and distinctly the various graduations upon it, although it may conveniently be constructed in a pocket or watch form as previously described.

A is the fixed or stationary ring having on its inner and outer edges suitable graduations, and also a small scale or scales commencing from 56 or 84 of the inner graduations and continuing in a reverse direction to 46⅔ and 70 respectively. The latter of these small scales is specially valuable for obtaining per centages in calculations for cotton, whilst the former is used for calculating per centages for woollen good. Neither scale, however, need necessarily be confined to any special

position or to any dimensions on the fixed or stationary ring, their present positions only being most suitable for the purpose. B is the inner or movable ring having on its inner and outer edges suitable graduations; those on its outer edge corresponding with the graduations on the inner edge of the fixed or stationary concentric ring A, whilst those on its inner edge are similar to those on its outer edge. Within the inner circle or ring is a movable dial plate C also provided on its outer edge with suitable graduations more especially for obtaining values, and for that purpose, each numeral of the scale is divided into sixteenths or eighths instead of decimal fractions like the preceding scales. To the outer edge of the said dial plate is fixed at a determined point, say No. 1 of the graduations, a fine finger or pointer D, extending across the movable ring or circle B on to the fixed or stationary one A, and in a line radius with the centre of the instrument. The graduations on the respective rings and dial plate may be further subdivided as desired.

Another pointer E is employed, capable of being moved round, projecting from the centre, and extending across the dial plate, and the rings or circles, which are all in the same plane.

These scales or graduations may be used for general calculations, but the apparatus is more particularly adapted for calculating in textile industries the quantities of weft, warp, reed, pick, counts, length and value. For involution and evolution and obtaining the logarithms of numbers, I make use of the scale on the outer edge of the stationary ring A, which said scale is further subdivided round the entire circumference as from zero to No. 1 of the graduations.

As a practical illustration of the working of my instrument, suppose it is required to find the weight and value of warp in a cotton piece 32 in. wide, 126 yards long, woven in a 70 reed, with 46 counts allowing 12 % for contraction at 8*d.* per pound. The problem stated arithmetically would stand thus :—

$$\frac{32 \times 126 \times 70 \times 1{\cdot}12}{840 \times 46} = \overset{\text{lbs.}}{8{\cdot}18} \times 8d. = \overset{\text{pence}}{65{\cdot}44}.$$

The two results would be found on the instrument thus :—Set pointer D opposite length (126) on A. Set reed (70) on B opposite contraction 12 on small scale on A. Set pointer E opposite counts (46) on B; then turn B until the width (32) comes under pointer E. Pointer D will now point to the weight on B, and opposite the price 8*d.* on C will be the value. Similarly, opposite any other price on C will be the value at that price. By bringing successive widths under the pointer E, the same thing may be obtained in relation to them.

Fig. 2, Sheet 2, is a back view (half size) of my improved apparatus or calculator shewing the working parts. A is the outer or fixed ring; B the inner concentric ring, to which is secured crown wheel F, into which gears pinion N carried by shaft O and operated by handle P. The handle J operates long pointer E by means of shaft K and bevel gear L, whilst the movable dial plate C is operated by crown-wheel M (fixed on any suitable portion of its face) pinion G, shaft H and handle I.

The whole apparatus may be enclosed within a neatly constructed box or case Q when the instrument is large, and the dials protected from damage by a glass cover. There may be hinged to the said case a small writing desk in place of a lid, for taking notes, and the instrument itself may be supported in an upright or partially inclined position by means of a folding leaf. In the smaller instruments the case is preferably in the form of a watch, and milled knobs are used to operate the dials and pointers in substitution of handles I, J and P, whilst the fixed scale for obtaining the logarithms of numbers may be engraved on the back thereof to decrease the size of the instrument.

I wish it to be understood that I do not confine myself to the particular form of driving arrangement herein described, as it will be evident, other driving arrangements may be devised for the purpose.

© B O B Williams Printed22/11/2023 CalcPatents Ed. 1.doc

N° 22,210.—A.D. 1892.

Lord's Impts. in Apparatus for Effecting or Facilitating Arithmetical Calculations.

Having now particularly described and ascertained the nature of my said invention, and in what manner the same is to be performed, I declare that what I claim is :—

1. The improved apparatus or calculator, substantially as described and illustrated in Figs. 1 and 2.
2. The fixed and movable concentric rings A and B, movable dial-plate C, and fixed and movable pointers D and E, substantially as described and illustrated.
3. The scales and graduations, substantially as described and illustrated in Fig. 1.
4. The working parts for driving the said dials, concentric rings and pointers, substantially as described and illustrated in Fig. 2.

Dated this 15th day of August 1893.

F. RICHMOND,
79, St. James Street, Burnley, Patent Agent.

London : Printed for Her Majesty's Stationery Office, by Darling & Son, Ltd.—1893

© B O B Williams Printed22/11/2023 CalcPatents Ed. 1.doc

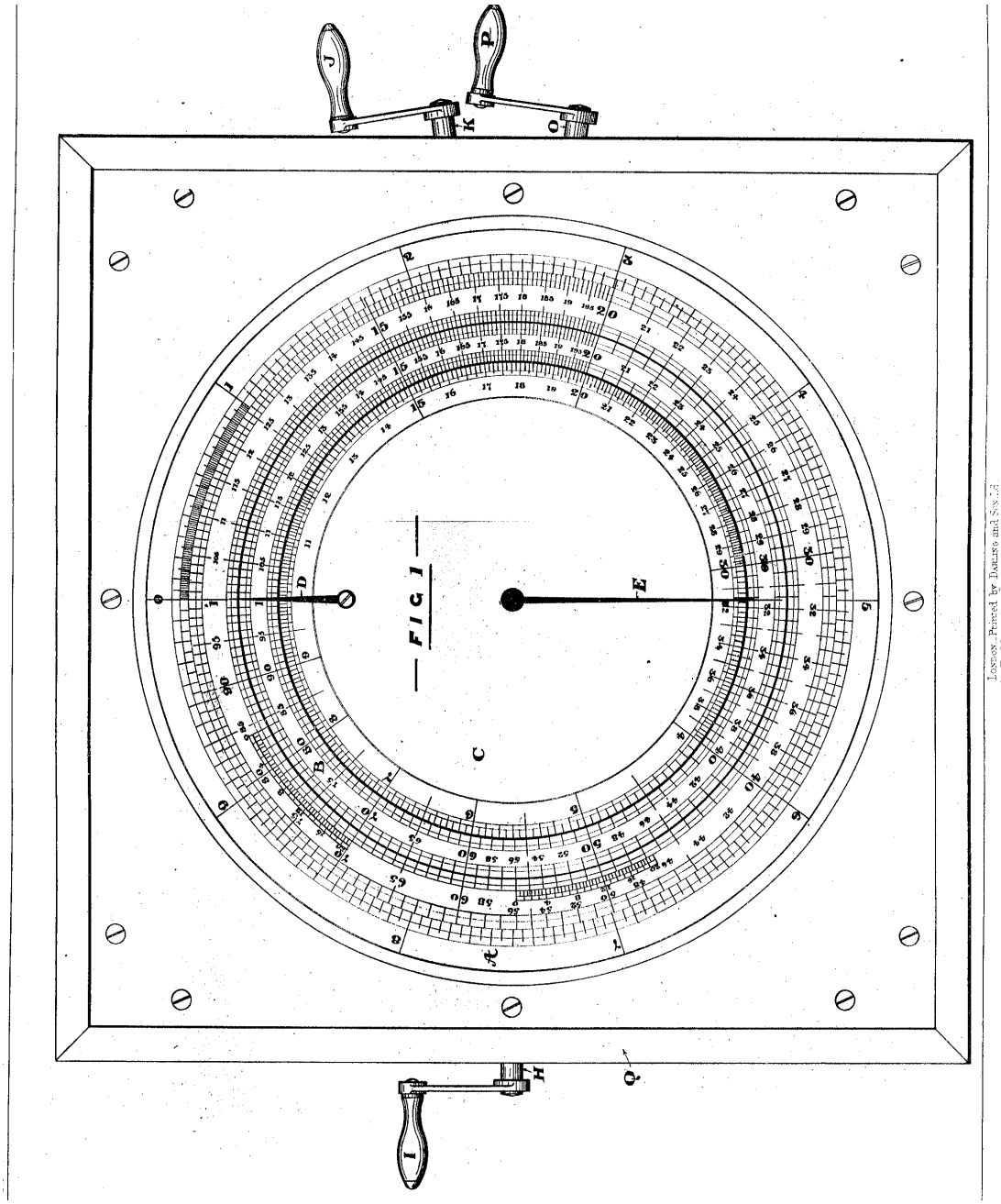

London: Printed by Darling and Son, Ltd.,
for the Majesty's Stationery Office. 1893.

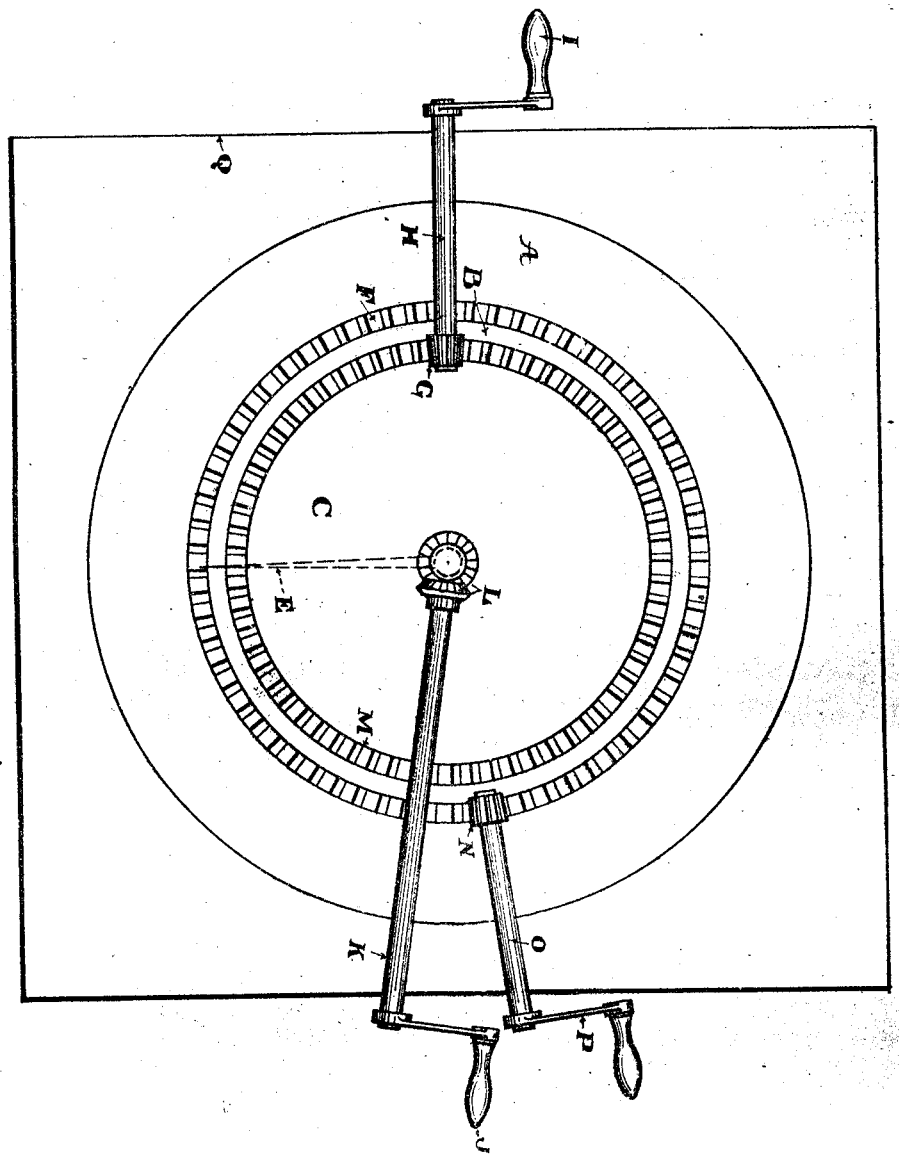

FIG 2

LORD ref and picture from eBay
See [24]



Lord E & W 7091 /1903 Circular textile calculator

7091. Lord, E., and **Lord, W.** March 27.

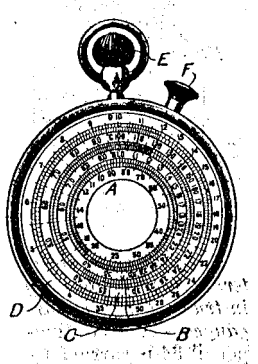

Calculating - apparatus of the circular slide-rule type, for computing weights, lengths, and values of textile fabrics. Two successive operations of multiplication or division are performed at one setting, there being a fixed central disc A, circularly-adjustable rings B, C, all divided on decimal logarithmic scales, and a fixed outer scale D, divided according to the logarithms of prices. The subdivisions of this scale are eighths, quarters, and halves. The displacement of the initial 10 graduation on the two fixed scales varies with the class of yarn for which the instrument is constructed, whether cotton, worsted, or linen, and introduces as a constant factor the number of yards per bank. Setting is performed by means of the milled heads E, F, which rotate pinions gearing with crown-wheels on the rings.

B x 2

Lotterhand J C 355/1903 Adder

355. Lotterhand, J. C. Jan. 6.

Calculating-apparatus.—In adding-machines in which each of a plurality of rows of keys numbered from 1 to 9 co-operates with a rotary longitudinal shaft 1, means are provided for actuating the total wheels 3 by the item wheels 2 while the item wheels are being re-set to zero by the depression of the bar A, for returning the item wheels 2 to zero without actuating the total wheels 3 when an error has been made in setting up the item, for repeating or adding the same item a number of times in succession, and for clearing the machine by re-setting all the wheels to zero. The total wheels 3 are loose, while the item wheels 2 are fast, upon the shafts 1, which, when released, are turned by coiled springs 6. These springs are preferably enclosed in sleeves 7 fast upon the shafts 1, the sleeves being provided with spirally-arranged pins 32 for engagement with the keys 1 to 9. Each row of keys is associated with a pivoted bail 18 from which a pin 20 projects through a slot 20^a in each key, Fig. 17, so that, whenever any key in any row is depressed, the corresponding bail 18 will be swung downwards without carrying down the other keys in the same row. On the downward movement of a bail 18, the rearwardly-projecting pin 22 rocks the spring-pressed latch lever 15, Fig. 9, so that it releases the disc 13 on the shaft 1, which is thereupon turned together with the item wheel 2 by the spring 6 through a distance determined by the number of the operating-key. Simultaneously, a pin 23 projecting from the forward end of the bail 18 forces outwards a latch 26, Fig. 8, so that the spring 25 can pull downwards the arm 24, and with it the bail, to the limit of movement permitted the bail. During this movement, the key is locked to the bail 18 by a projecting stud 28, thereby ensuring a full stroke even though the key be only partially depressed. The extent to which the shaft is turned is determined by the position of the

© B O B Williams Printed22/11/2023 CalcPatents Ed. 1.doc

spirally-arranged pegs 32, which strike the lower ends of the slots 20[a] when the keys are fully depressed, and stop the rotation of the shaft 1. After making nine-tenths of a revolution, the shafts are held by permanent stops 34, Fig. 9, engaging the discs 13, but either the stops 34 or the pins 32 corresponding to the keys numbered 9 may be dispensed with. The shaft 7 and the item

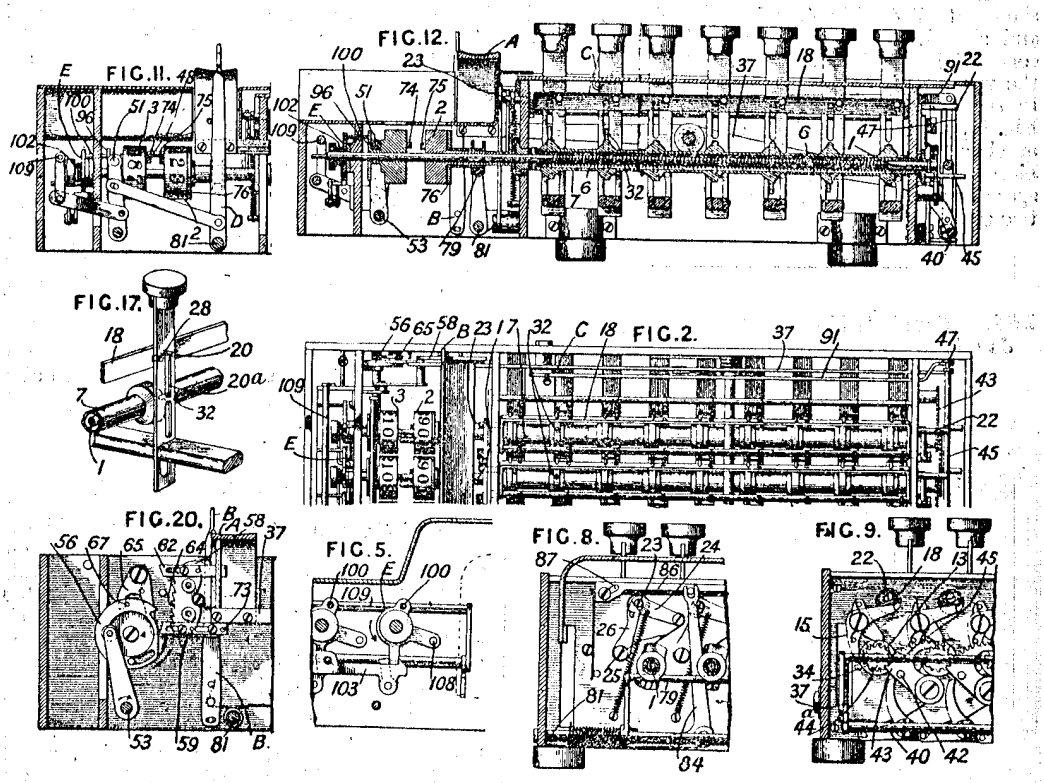

wheels 2 are re-set to zero by depressing the cross-bar A, which, through a pair of spring-pressed levers 37, a connecting-bar 40, and studs and racks 42, 43, operates the pinion 44[a] on the shaft 1; the levers 37 also cause a cross-bar 45 to lift the pins 22 on the bails 18, whereupon the keys are re-set by springs. Upon the depression of the bar A, a spring pawl 59 carried by a connecting-plate 58 engages a cam 56, Fig. 20, which rocks the shaft 53, causing the bail 51 to slide the total wheels 3 rearwards. Thereupon, one of the holes therein engages the pin 48 of the item wheel 2 before the re-setting rod 40 strikes the pins 42 to return the shafts and item wheels to their initial positions, so that the wheels 3 move with the wheels 2 during their return movement. The second spring pawl 62 re-sets the cam 56 and disengages the wheels 3, 2 when the bar A is released and moves upwards. The engagement of a spring-pressed pawl 65, controlled by a pin 67 on the cam 56, with serrations 64 on the plate 58, prevents the return movement of the bar A until it has completed its down-stroke. The correction of mistakes made in setting the item wheels is effected by pressing the lever B rearwards until it strikes a pin 73 and retracts the pawl 59, permitting the bar A to be depressed to re-set the wheels 2 to zero without turning the cam 56 and engaging the wheels 3, 2. To allow of the machine being cleared by setting all the wheels to zero, the pins 48 are passed through holes in the wheels 2, and are mounted upon discs 76, which may be retracted by a bail rod 79 actuated by pressing rearwards a lever D. The rearward movement of the lever D operates the rock-shaft 81, the bell-crank lever 84, and the slide bar 86, Fig. 8, which, moved downwards by the slots and pins 87, contacts with the pins 23 of all the bails 18 and releases all the shafts 1, which are then turned by the springs 6 to show 9 on the item wheels 2. The bail 51 is also connected to the lever D, so that, as the pins 48 are retracted, the wheels 3 are moved sufficiently near to the wheels 2 for the specially-arranged projecting studs 75, 74 to engage and carry the total wheels 3 to zero while the item wheels are turned to show 9. The item wheels are then turned to zero by depressing the bar A. To repeat or add the same item several times in succession, the lever C is pulled forwards, and, through levers 91, 47, throws the bail and key re-setting rod 45 out of operation. The keys and bails then remain in the set position when the bar A is depressed, while the rod 40 re-sets the racks 43 at each depression of the bar A, and returns all the wheels 2 to the zero position. Upon releasing the

© B O B Williams Printed22/11/2023 CalcPatents Ed. 1.doc

Lotterhand J C 17375/1905 Adder for Underwood typewtiter

17,375. Lotterhand, J. C. Aug. 28.

Calculating - apparatus. —A typewriter and adding-machine are separably combined. Figs. 1, 2, and 3 show an Underwood typewriter as arranged for use over an adding - machine of the kind described in Specification No. 355, A.D. 1903. The adding-mechanism 10 is set in a supplementary casing 20, provided with a front aperture 24^a for the passage of the typewriter numeral key-levers, or fingers 420 thereon, and a rear aperture 24^b for the passage of the universal frame. The adding - mechanism is modified only in that the key-tops are removed

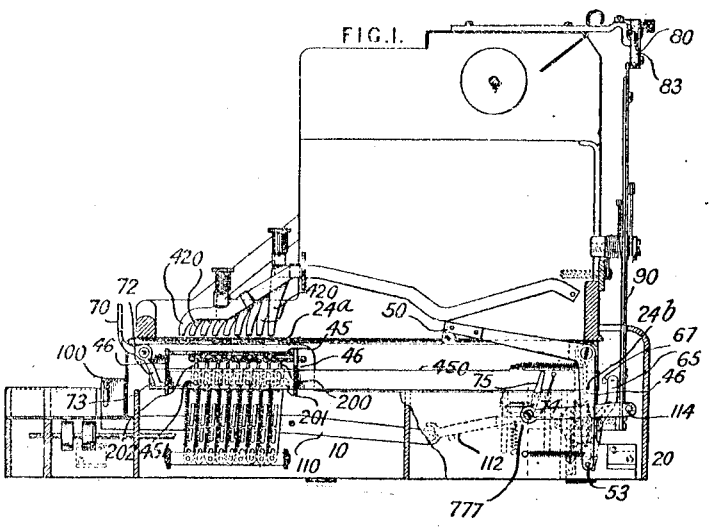

Lovering J G 17514/1892 Card for survey or navigation

17,514. Lovering, J. G. Oct. 1.

Calculating-apparatus for surveying &c. The apparatus consists of a square card divided into squares (say 36 to the side) by lines B, C and into points and fractions of points by lines D, *d* radiating from the corner *a*. In addition there is a quadrant E for degree divisions, and a second quadrant F struck from the corner *b* for taking the angles at which other lines cross the radial lines. A pair of graduated arms may be pivoted at *a*, and there is also a graduated cross-arm, one end of which slides in a groove in one of the radial arms and can be clamped in any required position.

The card may also be quadrant-shaped. As an example of the use of the apparatus, suppose a ship be moving along a line B and a buoy be sighted at *a*, one point on the starboard bow, and then, after sailing fifteen miles, the buoy is two points on the starboard bow, the two positions of the ship are determined as X, Y, between which is fifteen divisions, and the distances of the ship from *a* and the shortest distance at which it will pass the buoy can be measured.

FIG. 1

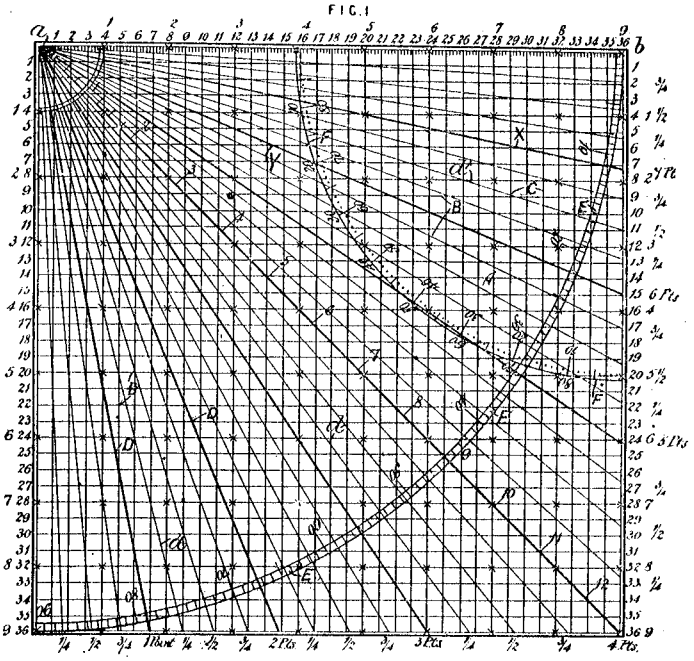

© B O B Williams Printed22/11/2023 CalcPatents Ed. 1.doc

Low D A 6049/1903 Slide rule wood & celluloid

6049. Low, D. A. March 16. *Drawings to Specification.*

Slide rules.—A slide rule is made with a central layer of wood covered on both faces with strips of transparent celluloid ; or the faces may be coated with celluloid solution. The graduations are printed on the wood, and may be made more distinct by treating the wood before printing with opaque celluloid solution.

Lowdon A H 16890/1902 Computing scale for screw propeller

16,890. Lowdon, A. H. July 30.

FIG.1.

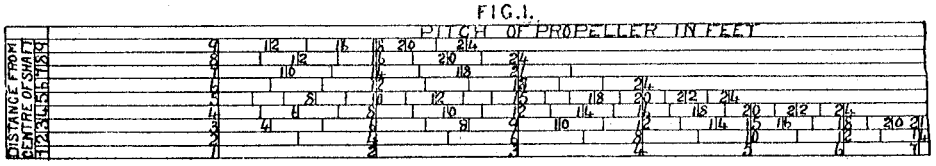

Computing scales.—The scale shown in Fig. 1 is used in connection with a hinged foot rule to ascertain the pitch of screw propellers. As shown in Fig. 2, one limb of the foot rule is laid on a blade B at any convenient distance X in feet from the axial line of the boss C, and the other limb is set parallel to the face of the boss. The span D of the foot rule then reads the pitch from the scale, which bears a series of linear graduations corresponding to different distances from the axial line.

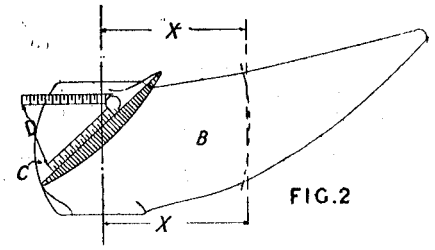

FIG.2

Ludeke J E F 2892/1873 Proportional compasses

2892. Lüdeke, J. E. F. Sept. 3. *Drawings to Specification.* [*Provisional protection only.*]

Calculating-apparatus.—The legs of a pair of proportional compasses extend outwards from the pivot in both directions, and, when the longer pair are set to the diameter of a circle, the shorter pair give the side of the square of equal area to the circle.

Lundberg G 21210/1892 Computing scale

21,210. November 22, 1892. **Weighing apparatus.** G. LUNDBERG, Logan, Utah, U.S.A.

Price-indicating scales.—The weight of the load is balanced by a heavy drum O which is supported between the arms of an open beam L. It is advanced by means of the screw N which is in one with the drum and works within the nut M. Heads R connected by the bar S embrace the ends of the drum, so as to allow the drum to turn freely within them, while they are prevented from turning by the bar S sliding on the beam L. The drum is graduated at the end marked U, for aliquot parts of the

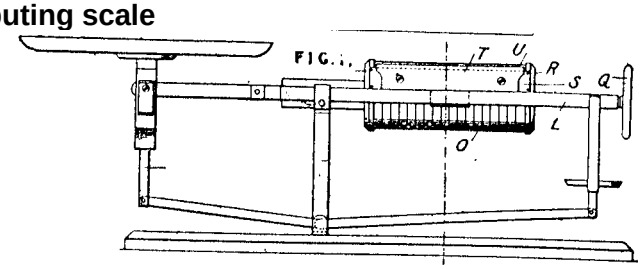

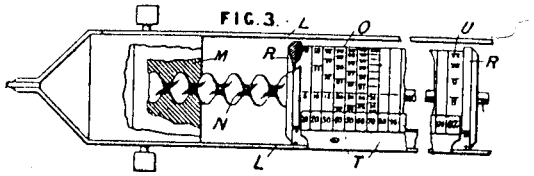

andard weight used, while the rest is divided to ow prices. The bar S carries a scale showing e standard used, in this case ounces, and marked ith price indications, here, cents per pound. As ie thumb-wheel Q is turned, the screw N screws it of the nut M carrying the drum O with it. When equilibrium is established, the weight is nown on the circle U, and the value by the raduation nearest the plate T corresponding to he quality of the goods. Thus, the value of oz. at 20 cents per pound would be read off as cents.

Lutz L 17645/1906 Adder

having a recess E under each key of a length corresponding to the denomination of the key. On one end of each bar is attached a lever D bearing a type to print the numeral corresponding to the

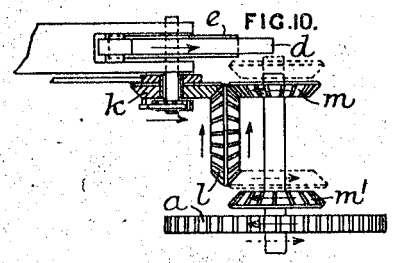

FIG. 10.

value of the keys which operate the bar. When a key is depressed, the oblique end piece F on it engages the corresponding recess E and moves the bar B to the left through a distance corresponding to the denomination of the key. The spur G on the key then rocks the bar B about the pivot C, thus throwing the lever D over to print the figure on the paper roll H. At the same time, the key presses down the yoke K on the lever *b*, the latter being pivoted at J and carrying the pivoted rack *d* which operates the corresponding setting-wheel *a*. The yoke K is graduated in steps to impart the requisite movement to the rack *d*. In a modification, a shaft *u*, Fig. 5, is carried beneath each row of keys at right-angles to the bars B. This shaft is in gear with the setting-wheel shaft, and is rotated through the requisite angle by toothed disks *t* actuated by a projection *s* on the key engaging a recess in each disk. Or these disks may be mounted on the shaft *u*, which they would then turn directly. Several means for setting the machine for addition or subtraction are described. In one form, each rack *d* may engage with either of two pinions loosely mounted on the setting-wheel shaft, and adapted by pawls and ratchets to rotate the setting-wheel in opposite directions. To change from one pinion to the other, either the pinions or the bar *b* can be shifted by a sliding rod. In two other forms, one pinion only is actuated by the rack. One of these forms is shown in Fig. 10. The pinion *e* is connected by a pawl and ratchet with the bevel-wheel *k*, which engages a double bevel-wheel *l*. This wheel *l* engages either of the bevel-wheels *m*, m^1 mounted on the sliding shaft to which is feathered the setting-wheel *a*. In another form, the bevel-wheel *k* is replaced by a pinion. The setting-wheel coupled to another pinion of the same size as the wheel *k* is mounted on a separate shaft. The two latter pinions may be coupled by either of two sliding gears of pinions, which rotate the setting-wheel in opposite directions, according to whether addition or subtraction is to be performed.

Mace J 12091/1913 Sph trig

12,091. Macé, J. May 23.

Spherical - trigonometry calculators.—Relates to apparatus for solving problems in astronomy, navigation, and spherical geometry of the kind comprising a revoluble sphere. The sphere spindle 2 is geared to a time dial mechanism 6 and has a milled disk 5 for setting it, the whole being mounted on a frame 3, having an upright 7 to which is pivoted an arm 9 with a graduated circle to read against a pointer 13. The arm 9 is counterweighted and carries a bar 10 at right-angles on which is journaled a pointed spindle 15 carrying a graduated arc 19 along which moves a pointer 21. The angular movement of the arc 19 around the spindle is read off on a dial 18. Problems can be solved which involve latitude, time, position of the observer, identification of observed star, and the like, the globes being marked temporarily by the pointers 15, 21 where necessary. For use on land, the polar axis is adjusted parallel to the earth's axis by means of a joint 33, 34 formed of tubes fitted on a rod 35 working in a socket 36 attached to a plate 37 with levelling-screws, the polar axis fitting in a socket 60 attached to the moving part 33 of the joint, and carrying a plate 3. When the adjustment is complete, the whole is embedded in cement below the plate 3, which has legs to engage the cement. In this form a semicircular graduated arc 22 is loosely

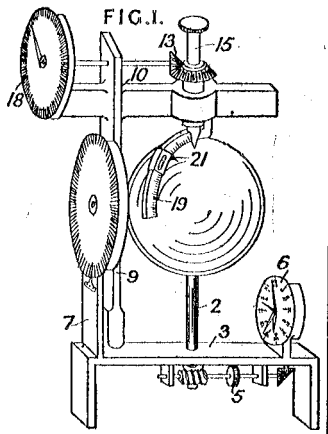

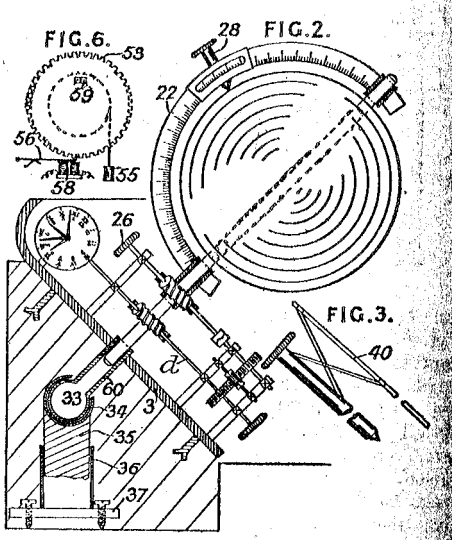

© B O B Williams Printed22/11/2023 CalcPatents Ed. 1.doc

Mackay D 23385/1909 Tab calc for ship loading

23,385. Mackay, D. Oct. 13.

Tabular calculators.—A tabular scale is used in conjunction with a cursor H having a sliding pointer J for directly reading the loading of a vessel. The draught is indicated by a gauge A, beside which are placed scales of draught and deadweight. The scales for the deadweight in fresh and salt water are joined by curves G, to provide readings for intermediate densities of water. By placing the pointer J at a point between the two scales corresponding with the density of the water and the top of the cursor H on a level with the water in the tube, the load may be read off directly on one of the curves G.

FIG. 2.

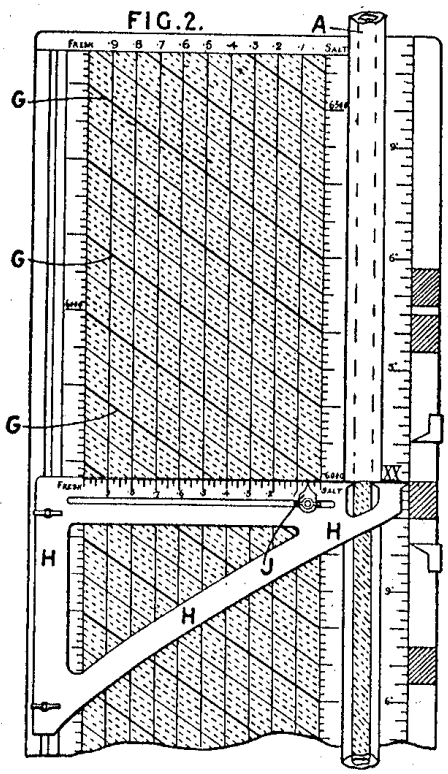

Mackenzie K D 121677 of 1918 Tab calc for logarithms

MacKenzie was General Manager of Frederick Braby & Co Ltd

121,677. MacKenzie, K. D. March 8, 1918.

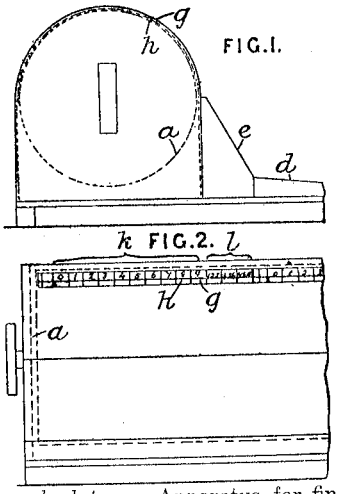

Tabular calculators.—Apparatus for finding the logarithms and anti-logarithms of numbers comprises a cylinder *a* on which is printed in the usual way a table of logarithms, a single line of which is visible through a longitudinal slot-opening *g* in the casing. The upper edge *h* of this slot is bevelled and carries sets of numbers *k*, *l*, representing the third and fourth figures of the number and appearing over the corresponding mantissa and log. mean differences on the table of logarithms. The right-hand portion of the cylinder is similarly arranged for finding anti-logarithms. The casing may be dispensed with, in which case the numbered edge *h* is on a straight bar. A tabular calculator *c* and a writing-pad *d* may be provided. In a modification, the tables of logarithms are arranged in flat form, over which the number edge *h* may slide.

Maclaren Cheese Cutting Machine Co 24516/1907 Cheese cutter

24,516. Boult, A. J., [*MacLaren Cheese Cutting Machine Co., A. F.*]. Nov. 5.

FIG.I.

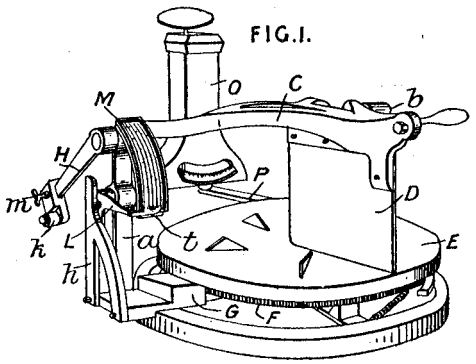

Scales.—In a cheese-cutter provided with a computing-scale, a pointer *t* carried by a bell-crank lever L moves over a scale M and indicates the amount cut. The scale M is divided into a series of vertical columns, corresponding to the price of the cheese, which are divided into equal-value portions.

MacMaster P 1787/1904 Time slide rule not log

1787. MacMaster, P. Jan. 23.

Slide rules.—A rule, to show the amount of time spent by a workman on a job, consists of a slide B marked from left to right with the hours and quarters from 6 a.m. to 6 p.m., indicating the time of finishing, and a rule A, the upper part of

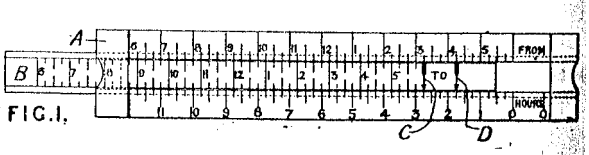

FIG.I.

which is marked in the same way, to indicate the time of commencing, while the lower part is marked in hours and quarters from right to left. Hours before and after the dinner time may be coloured differently. The time spent is read on the lower part of the rule opposite an arrow C on the slide, if the work has been continuous, or opposite another arrow D if a dinner hour has been included; other arrows may be spaced at different intervals on the slider, to allow for other meal times.

Magne F L 2484/1903 ASMD

2484. Magne, F. L. Feb. 2.

Calculating-apparatus for adding, subtracting, multiplying, and dividing, and applicable for teaching arithmetic. Two cylinders *i*, *j*, Fig. 2, are geared by mitre gearing to the shaft *n*, on the end of which is a cylinder *k* with a series of numbers from 0 to 10. This mechanism is enclosed in a box *a*, Fig. 1, having three openings *d*, *g*, *h* in the top. At *d* is seen one of the numbers on the cylinder *k*. At *g* is seen a row of figures on the cylinder *i*, each representing the sum of the figure

FIG. 1.

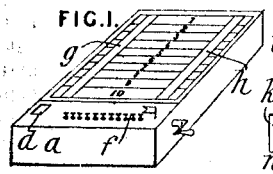

FIG. 2.

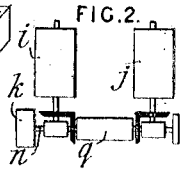

at *k* and the fixed figure on the opposite coloured strip on the top of the box. At *h* is a row of figures on the cylinder *j*, each representing the product of the figure at *k* and the fixed figure opposite. Any required figure is brought opposite *d* by pressing the corresponding key *f*. This releases the cylinder *q*, which is then rotated by clockwork till a stud on its surface comes in contact with a stop mounted on the key *f*. A modification is described in which a fixed dial moves inside a fixed ring. This is used for addition and subtraction only.

Mallmann J 5322/1900 Adder

5322. Mallmann, J. March 20.

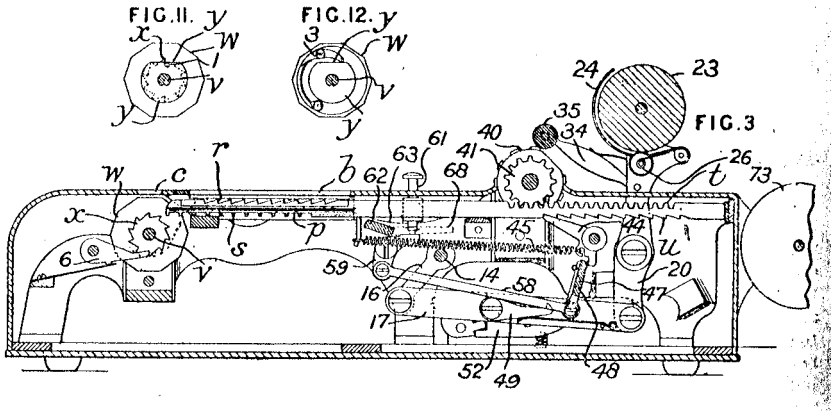

Calculating-apparatus; counting-apparatus. — The apparatus is "set" for each number to be added by pressing a pointed tool, pencil, or the like into the proper tooth *r*, Fig. 3, of a bar *p*, and sliding it to the left till the tool is stopped by the edge of the opening *b*. There is a separate bar for each denomination (units, tens, &c.), and the teeth are numbered from 0 to 9. Adjustable longitudinal bars may be placed across the opening *b*, to distinguish the millions, thousands, &c., and act, when necessary, as a decimal point, or to separate cents and dollars. A slight movement is given, even in registering zeros, so that the number set up can be read off along the edge of the opening *b* and mistakes avoided. The teeth *s* by means of ratchet-wheels *x* actuate the counting-wheels *w*, showing through aperture *c*, as the bars move to the left, spring pawls 6 preventing back movement on the return stroke; the teeth *t*, engaging pinions 41, set the type-wheels 40 for printing the items; the teeth *u*, engaged by spring pawls 44, hold the bars in position during the printing operation. To print each item, the shaft 14 is rocked by an external handle, and, through the crank 16 and links 17, swings the levers 20 carrying the cylinder 23 and feed-roll 26 so as to bring the paper strip passing between the former and the clip 24 against the type-wheels. The paper strip is drawn from a spool 73, and, in the return stroke, the cylinder 23 receives a slight rotation by means of a pawl and ratchet feed, not shown, so as to space the lines of figures printed. Spring levers 34 carry an inking-roller 35, which inks the type as they are being set, but moves out of the way when the impression is being taken. A spring pawl 49 and auxiliary pawl 52, engaging a cross-bar 47 pivoted at 48, swing its upper end backwards during the return of the links 17, and, releasing the pawls 44 from the

© B O B Williams Printed22/11/2023 CalcPatents Ed. 1.doc

Mallmann J 15444/1901 Adder printer

see[7]

15,444. Mallmann, J. July 30.

Calculating - apparatus. — Sliding rack - bars *y*, pulled under rows of keys *q* till they strike the depressed ones, set type - wheels 43, and in the return movement (after the impression has been taken on paper 77 by a rocking platen 63) drive adding-wheels 5. The action of the rack-bars is due to the reciprocation of a crosshead 32 against the ends of the rack-bars by cranks on a shaft 29 which is geared to a main shaft 25 having a crank handle. The racks are applied to the adding-wheels by a cam 119 on a third shaft acting through levers 117, 115 (not fully shown) on a transverse rocking lever 113 which bears spring fingers. The intermediate lever 115 is pivoted on an arm 125, and, when further addition is not desired, as when the total is to be printed, a special key 122 is struck to put the arm in contact with the rocking bar. The intermediate lever is thus lowered, and the rocking bar is held. The tens are carried by fingers 104 on a cylinder 86 resetting ratchet levers 109 on stepped props 106, which have been wiped aside by odd teeth 105 on the units wheels. The rocking platen is operated, Fig. 8, by a pair of cams 85, bell cranks 82, and coupling-bars 62 with springs 83. When printing is not desired, the platen is locked. The keys release the rack-bars by disengaging pivoted detents 14, 11 from lugs 10, for which purpose sliding bars *r* between the rows of keys have bevelled ends in contact with the detents, and are shifted by pins *t* on the keys entering oblique notches *s* in them. Spring detents 19 retain these bars in their new position, till, at the end of the revolution of the wheels, a transverse slide 22 disengages them by means of pins 23. This slide is also worked by a special key, in case a wrong digit has been struck. The first line of detents is in close order, but the second line is open, so that all the rack-bars on the units side of the operated key move from the first to the second detents. The printing-wheels have a blank division between the zero and the 9 type, and the space between each pair of detents gives the zero the printing position. The units detent of the first line draws a transverse bolt 89 from one of the driving-wheels, but it is returned by one of the cranks. This bolt may also be drawn by hand so as to allow another revolution of the crank handle for making a double space on the paper. In the return movement of the rocking platen, a pawl on the frame feeds the paper. An inking-ribbon 47, connecting a pair of loose reels 45, is wound up by either of them which is driven by one of a pair of ratchet lever, 51 having pawls 53 that are alternately thrown out of action by hand. The shaft being formed with shoulders, a spring bearing against one end and an arm applied to the other end serve to press the driven reel into frictional contact with the frame, so that it is not then dragged reversely by the pawl. The ratchet levers are operated by studs 52 on the main shaft 25. The type-wheels are locked, while printing, by a bail 79. In order to set the wheels to zero, a special key 130, Fig. 8, on the units side of the machine is struck. A slide 134 shifted by this key draws the bolt 89, holds the platen from action, and raises a plate 138, which fixes the carrying-levers 109 and lifts a detent from a pin on a rack-bar on the other side of the machine. This rack-bar turns the common shaft of the wheels in the same way as the others turn the wheels only, and with the aid of the internal pins and pawls shown in Fig. 15 the wheels are brought to zero. In a simpler arrangement, the shaft is turned by a removable handle, instead of by the prime action.

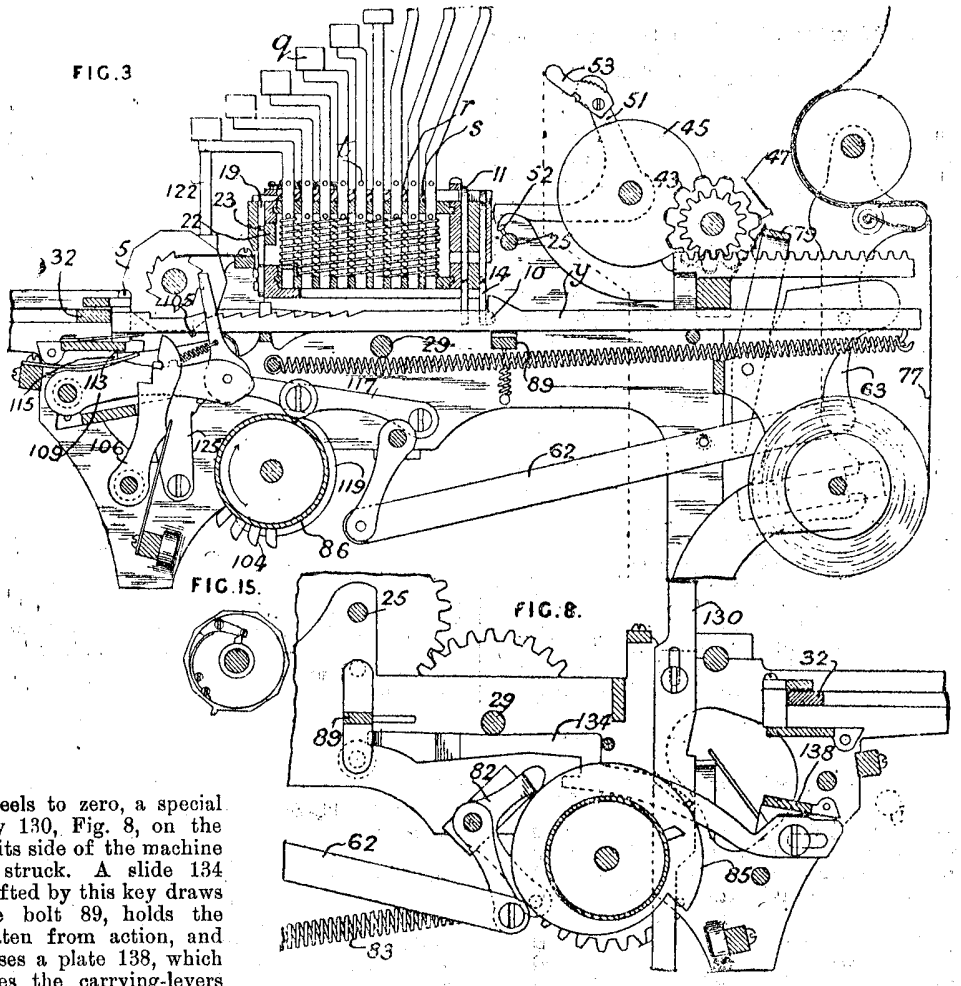

© B

Mallmann J 27874/1904 Adder

27,874. Thompson, W. P., [*Mallmann, J.*]. Dec. 20.

FIG. 29.

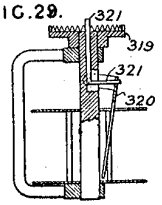

FIG. 1.

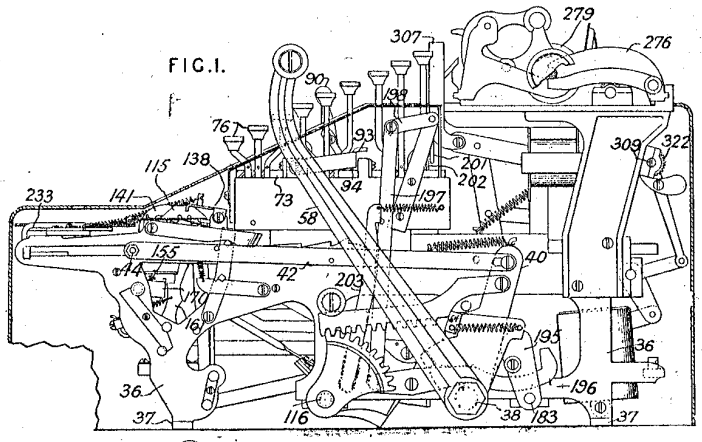

FIG. 2.

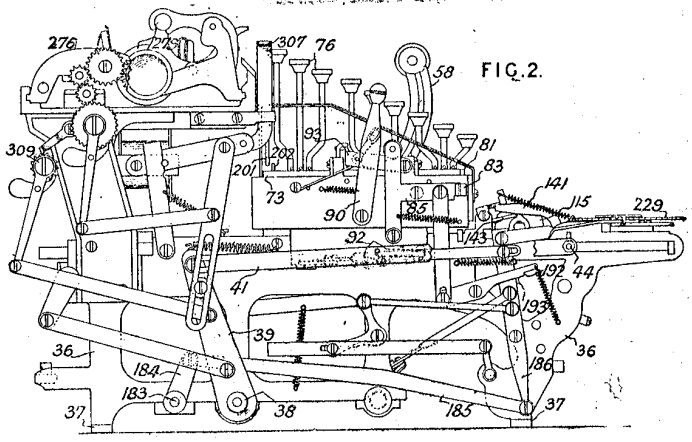

FIG. 5.

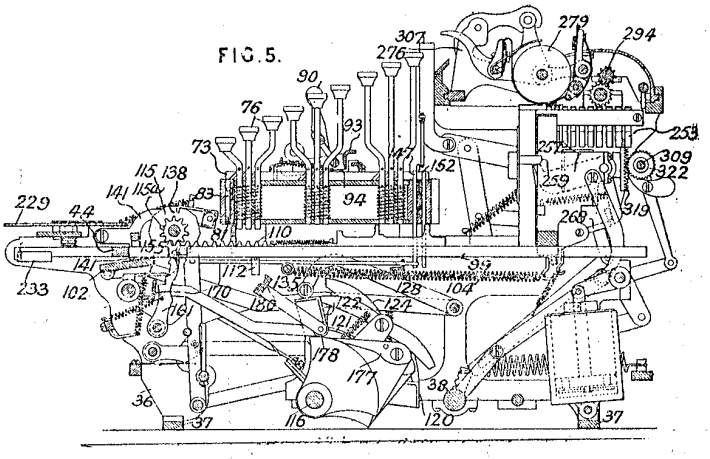

Calculating-apparatus ; counting-apparatus.—In a keyboard adding-machine, the keys set stops which limit the motion of rack-bars forming the actuating-elements of a complex counter provided with detent, transferring, and zero-setting mechanism ; the number of items added is registered upon a simple counter, and the rack-bars set the types of the printing-apparatus, which is furnished with paper and inking-ribbon feed devices ; means are also described for interlocking the various parts, for ensuring at each setting complete operation by means of an external handle, and for clearing the machine and printing the total when required. Figs. 1 and 2 show side views of the machine, and Fig. 5 a longitudinal section, passing through the keyboard, the parts being supported by the side-pieces 36 and cross-bars 37 of the frame. Depression of one of the nine keys 76 allotted to each order of figures forces the the corresponding slide 73 to the rear by means of pins on the key entering grooves in the slide, and thereby prevents operation of a second key in the row, swings the zero stop lever 147 and blank stop lever 152 by means of a bevelled cam end so that they move out of the path of a lug on the actuating rack-bar 99, and finally locks the key and all these parts in position by allowing the spring stop 81 to snap in front of the slide. The operating-handle 58 then begins its complete forward and backward motion, and by means of the arms 40 and links 42 moves the return bar 44 forwards,

655

More omitted

Manners C 16846/1892 Log scales on tape measure

16,846. Manners, C. Sept. 21. *Drawings to Specification.*

Calculating - apparatus; measures of length. — Logarithmic numbers are marked against the graduations of a tape or other linear measure to facilitate the conversion of products of the graduations into cubic or square quantities of another denomination, *e.g.* inches into cubic yards.

Manson J L 114321 of 1917 Slide rule for metal springs

321. Manson, J. L. Feb. 23, 1917.

FIG. I.

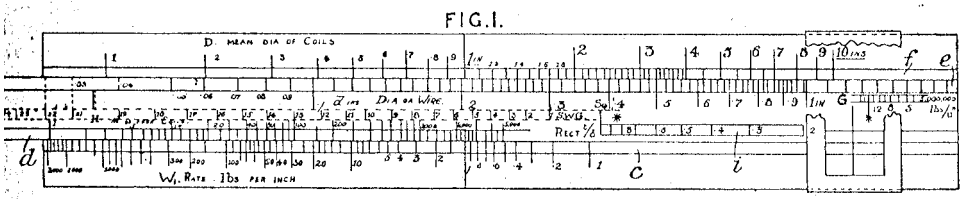

c-rules.—For calculations concerning metal s, logarithmic scales *c*, *d*, *e*, *f* are provided ponding to the load, number of free coils, ter of the wire, and diameter of the coil re- vely, and with correction scales *i*, G, for f rectangular cross-section and of different metal, so that a calculation made for round steel wire, for example, may be corrected or adapted for rectangular wire of a metal having a different modulus of elasticity. Scales for calculating the stress, length of wire, and weight may be provided on a sliding part of the back of the rule.

March L R 22698/1899 Adds columns

22,698. March, L. R. Nov. 14.

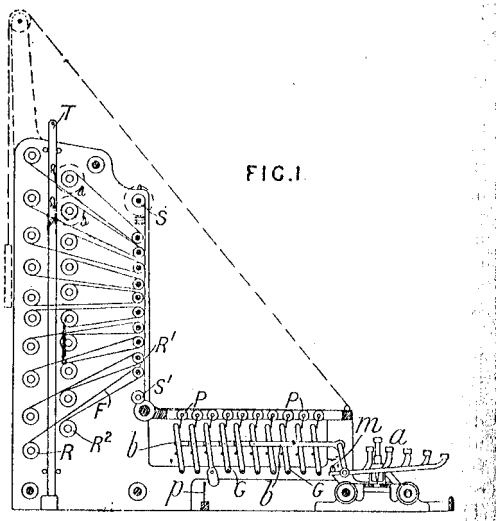

FIG. 1

Statistics, compiling; counting-apparatus; calculating-apparatus.—Relates to apparatus of the type-writer character for compiling statistics, such, for example, as a population divided into professions, trades, &c. and also in other ways. The keys *a* act through draw-bars *b* and levers G upon the counters P, while whenever a key is pressed it raises a bar *m* and completes circuit for an electric counter, thus recording the total population. Special data, such as the number of single persons irrespective of their profession, may be recorded by a second electric counter for which contact is made at *p*. When the whole data have been set up on the counters, the counter frame is swung up to print a record on sheets F wound round rollers R¹ between rollers R, R². This action feeds the transfer strip S, S¹ and oscillates the bar T carrying the feed-pawls for the winding-on rollers R². The means of driving the counters may be somewhat varied, and they may all be actuated electrically. A checking-device is used to prevent mistakes. This also takes the form of a type-writer with a rotary type drum; the draw-bars for actuating the counters, in this case arranged vertically, have tappets acting on a lever at different distances from its centre so as to give it different throws; the lever actuates toothed gear for turning the drum. Again, the keys may actuate needles for pricking a series of holes in a recording-strip. When any set of data has been registered and checked, the strip is fed forward by hand-actuated gear which prints an index number or sign beside the row of holes. In some cases, besides registering certain data, it is necessary to take totals of the items, for example the number of truck-loads sent along a railway and their total weight. In this case the type-writer keys act also upon an arm at different distances from its fulcrum giving to a second lever a throw proportional to the amount marked on the key. The counting-wheels, units, tens, &c. are mounted in a sliding carriage, and their actuating sectors are brought successively over the second lever by depressing a spacing-key actuating toothed gear. The carrying from one wheel to the next is effected by the action of pawls on ratchet-wheels, each pawl being held out of action, through nine-tenths of a revolution of the lower wheel, by a cam.

Marcet W 2820/1879 Adder uses balls

2820. Marcet, W. July 10.

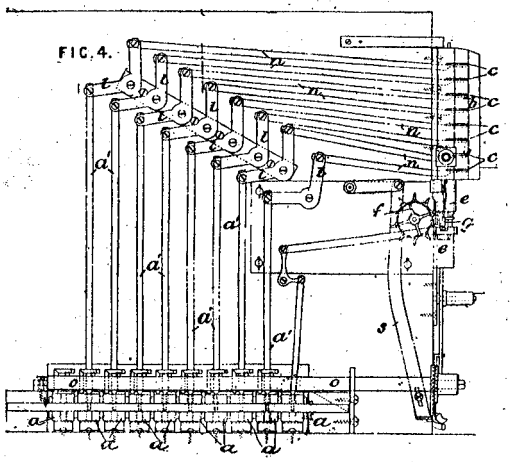

Arithmometers.—In a tube *b* are nine balls supported by a trap. The keys *a* are marked from 0 to 9, and by pressing one of them a slide *c* actuated by rods and cranks enters the tube *b* above the number of balls corresponding to that on the key. A hook on the key catches an arm on the axis *o* (kept in position by a spring) and partially rotates it to draw back the trap and let the balls below the slide fall into a shoot *e*, into which the points of a star-wheel *f* project. As each ball reaches the wheel, it pushes back the spring stop *g*, which locked it, and presses the wheel round one point, the stop then locking it again. A light spring acting upon the wheel in opposition to the balls serves to turn it (and a counting-train connected with it to zero), when an operation is finished. The balls fall into one of two receivers, and are returned to the top of the tube *b* by the rotation of the receivers about a horizontal axis. The receivers are moved by clockwork which when run down strikes a bell. On each receiver is a stop which, when the machine is at rest, bears on a buffer pad on a finger on the shaft O. The key being pressed the receiver is released and moved a short distance until stopped by the said finger, but when the key is released it makes a half revolution. A spring door which covers the receiver during its revolution is opened by contact with the top of the tube *b* to allow the balls to fall into the tube. The train of counting-wheels indicates the sum. In order to show if the machine is working properly, a toothed segment, carrying an index working over a sector index numbered to correspond with the keys, is at every action thrown into gear with the wheel *f* through a link actuated from the shaft *o*, which also releases it when the key rises, so that the operator can see if the wheel *f* is working properly. Divisions are fixed between the keys to prevent two being accidentally pressed at once.

Marion et Cie 133629 of 1919 Tab calc for trig

133,629. Soc. Marion et Cie. Feb. 26, 1919, [*Convention date*].

Plane-trigonometry calculators; tabular calculators.—Relates to apparatus for calculating, from the air-speed of aircraft and the velocity of the wind, the angle of correction for drift, and consists in a semicircular plate *a*, two centrally pivoted pointers *e* and *f*, and a graduated plate *g* slidable on the plate *a* at right-angles to its diameter. The plate *a* has two superimposed series of graduations *b*, b^1 around the circumference representing the angles from 0—180 degrees and from 180—360 degrees, and is provided with a series of graduations *c* from 0—90 degrees and a series of curves cutting the ordinates from the graduations *c* at points representing the fractions $^1/_{10}$, $^1/_5$, $^1/_4$, &c. of the sines of the angles, which are multiples of 5 degrees. The

FIG.2.

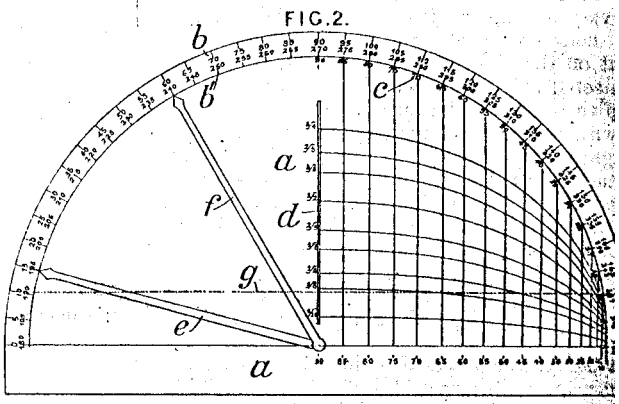

FIG.3.

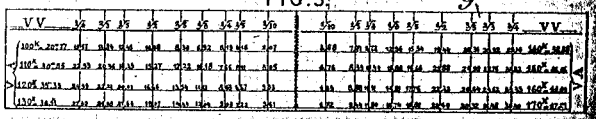

150

Marks A S 14180/1911 Missile tracker

14,180. Marks, A. S. June 15.

Computing-scales.—Relates to apparatus of the kind comprising a vertical height scale and a horizontal velocity scale, and a pointer adjustable relatively thereto, for ascertaining the angle of descent of a missile from a moving air-ship to the ground. The invention comprises a set of apparatus to be used collectively, and which are individually disclaimed, for ascertaining the speed of the air-ship, the angle of descent of the missile, the wind correction, and, therefrom, the moment at which to release the missile. The computing-instrument is shown in Fig. 1. A pointer *g* is pivoted to the zero of a scale of heights *c* and is supported by a clip *h*, which is adjustable in a slot *i* in a transverse bar in accordance with the graduations *a*, which represent the times of passage of the image of

FIG. 1.

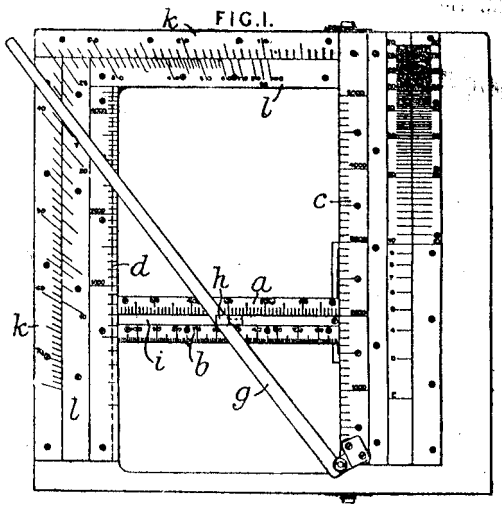

an object upon the ground between two fiducial lines on an observing lens. The transverse bar is adjusted to the height graduation on the scale *c* corresponding to the height of the air-ship, and the speed of the air-ship is indicated by the pointer *g* on a speed scale *l*. The angle of descent of the missile is next determined by adjusting the transverse bar to the height graduation on a second height scale *d*, which scale is based upon the laws of falling bodies, and the clip *h* to the graduation on a speed scale *b* agreeing with the ascertained speed; the angle is indicated by the pointer *g* on a scale *k*. The sets of scales may be distinguished by special colours.

Marshall H 1481/1897 Adder for type writer

. **Haddan, R.,** [*Marshall, H.*]. Jan. 19.

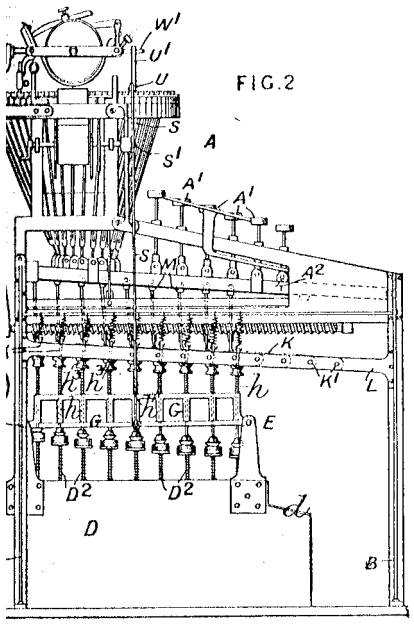

FIG.2

:ulating-apparatus.—Type-writer and adding- ne. The type-writing apparatus A is arranged s B above the adding or computing machine 'he adding-machine is of ordinary construc- ınd shows the totals through openings in the front *d*. It is provided with nine transverse rows of plungers D^2, the front row operated from the type-writer key for the numeral 1, and the next row by the key for the numeral 2, and so on. The plungers in each row may be arranged so that the two right-hand ones register fractions of a dollar, and the remainder units, tens, &c., to the left-hand one, which may represent hundreds of thousands of dollars. The plungers D^2 are operated by a row of plungers *h* in a carriage G arranged to move transversely of the machine on rods E. The carriage G is moved by levers S pivoted at S^1 and connected to the ends of a rod U on which is an upwardly-projecting arm U^1 engaged by a pivoted arm W on the carriage. The arm W^1 is preferably adjustable so that the movement of the carriage G commences at the desired point in the line of writing. The plungers *h* are operated by the transverse bars of lever frames K pivoted at the points K^1 in bars L of the framing. The lever frames engage grooves h^3 in the upper ends of the plungers *h*. Connecting-rods M connect the frames K to the levers A^2 operated by the numeral keys A^1 of the type-writer.

Marshall R 23981/1908 Circ slide rule for furnace charge

23,981. Marshall, R. Nov. 9.

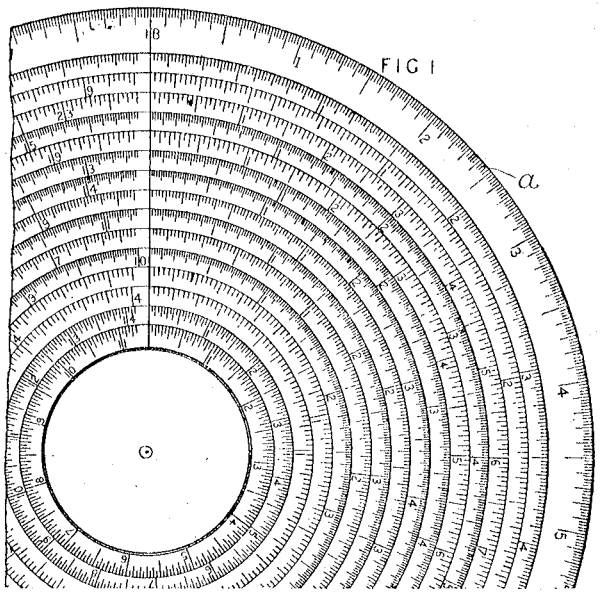

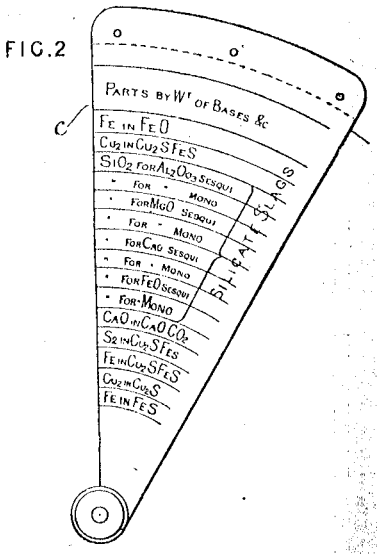

Calculating-apparatus.—An apparatus for calculating the amounts of the constituents of the charges for smelting-furnaces and the like, comprises a disk *a* with a number of graduated circles marked thereon, and a sector-shaped pointer or arm *c* divided by a number of arcs to correspond to the number of circles and marked with the names or symbols of the various elements that may occur in smelting &c. The front of the disk is shown in Fig. 1, and the pointer in Fig. 2. To find, say, the amount of silica necessary to combine with 125 kilos. of manganese oxide, the pointer is placed opposite the 125 graduation on the outer circle and the result 93·5 read off on the circle corresponding to the arc for a monosilicate. On the back of the disk *a* a smaller concentric disk is placed, these two being graduated in the same manner with logarithmic scales as in the ordinary slide-rule. The outer edge of the disk *a* has a scale of equal graduations to represent the logarithms of the numbers on the inner scales.

Marston F 9235/1842 Apparatus for calculations Chrono abr

MARSTON. 27th Jan. 1842.	9235. A grant unto FRANCIS MARSTON, of Aston, in the parish of Hopesay and county of Salop, esq^re, for his invention of "Improvements in apparatus for making calculations"; 6 months.

A.D. 1842, January 27.—N° 9235.

MARSTON, FRANCIS. — "Improvements in apparatus for making calculations."

"Constructing an apparatus for making calculations by combining two circular rows of figures, the one moving and the other fixed," together with an "apparatus for indicating the hundreds, by recording the number of revolutions made by the revolving circle." A pound, shilling, and pence table, and it may be other tables, may be combined with the said revolving and fixed circles of figures "to give the value of the numbers obtained."

Within an outer circle of figures, an inner circle of figures revolves on a central axis, the said axis being fixed to the board that carries the outer circle of figures. There are as many holes in the upper surface of the board that carries the revolving circle of figures, as there are divisions on the said revolving circle of figures, and such holes become the means of moving the said circle by means of a "pointer," according to the arithmetical operation to be performed. The table is composed and arranged so that any number of pence or shillings up to 500, is resolved at sight into pounds and shillings.

At nought (0), or the starting point in the fixed circle, is a fixed point, and, on the revolving board, a projecting tooth is so placed that it moves a toothed wheel one tooth for every revolution of the revolving board. The axis of the toothed wheel carries an indicating hand that moves over a dial so as to record the hundreds, if the revolving circle is divided into 100 equal parts.

[Printed, 10*d*. Drawing.]

Martin A J 108197 of 1916 Slide rule scales for wireless telegraphy

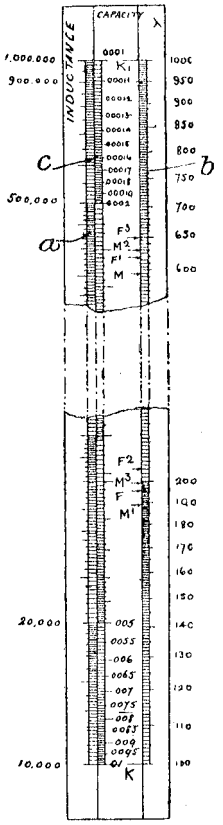

108,197. Martin, A. J. July 27, 1916.

Slide-rules of the type having three scales, which may be defined, with reference to the four scales of the ordinary rule, by stating that the second scale is reversed with respect to the fourth, while the fourth is graduated to give the square root of the first and the third scale is omitted, are adapted to the solution of problems in wireless telegraphy by graduating the first scale *a* in terms of inductance, the second *c* in terms of capacity and the fourth *b* in terms of wave length. The position of the third scale is occupied by reading marks arranged according to the scales adopted.

Martin C F 7905/1889 Length & slide rule

7905. Martin, C. F. May 11. *Drawings to Specification.*

Calculating-apparatus; measures of length.—A measuring-tape, used in a telemeter of special construction, is graduated logarithmically, so that by doubling it over it can be used as a slide-rule to facilitate the necessary calculations required for determining the distances.

Martin J H 8976/1904 Adder

8976. Martin, J. H. April 19.

Calculating-apparatus; counting-apparatus.—Keyboard adding and subtracting machines in which one group of ten keys is employed, the item wheels moving automatically upon a carriage as the digits of successive orders are depressed, are shown in Figs. 1, 2, and 4. The totalizing-wheels are capable of two positions, one for addition, the other for subtraction, and are moved by a lever into gear with the set item wheels, which are then released to operate the totalizing-wheels. The items, sums, and differences are also printed, and the machine is so designed that its keys may be coupled to the numeral keys of a type-writer. When one of the keys 1 shown in the plan view, Fig. 1, and side elevation, Fig. 2, is depressed, the pin 22 thereon depresses the setting-bar 3, which is carried by arms 5 on the shaft 7, and carries down with it the forks 21, roller 20, and U-shaped frame 18, pivoted on studs 17 concentric with the spindle 10, mounted in posts 11 upon the carriage 8, which can slide transversely in the guides 12. Loose upon this spindle are the item wheels 9, each having a circumference divided into toothed and type-bearing segments 13, 9^1, and normally held by a ratchet 23, but rotated by the spring pawl 19 on the frame 18 when a key is depressed, the extent of the motion being determined by the position of the pin on the key rod. Previously to this, the foot of the key has depressed the spacing-bar 4, held by arms 6 also journalled in the rear shaft, and by means of the linkwork 31, 30 has forced the lever 29 to move transversely across the machine and to allow a pin at its extremity to move one tooth along the rack-bar 28 attached to the carriage, so that, on the return of the parts effected by the spring 27, the rack-bar and carriage will be moved transversely by that amount against the tension of spring 107, and held in position by the detent lever 34, spring-pivoted at 105. Over-running of the item wheels is prevented by a projecting finger 35 on the spacing-bar, which, at the end of the down-stroke, rocks the lever 36 and brings its extremity 38 into engagement with the item wheel. The bar 83 is next operated to put the item on to the totalizer, the first step being to draw the bar 86, and the totalizing-carriage 39 with which it is spring-connected, horizontally forward in the guide-posts 40 until the total wheels 45 or the subtracting wheels 49^1, Fig. 4, are in gear with the item wheels. Upon the carriage are posts 43 with a cross spindle 44^1 for two U-shaped frames, an upper one 57, and a lower carrying on a spindle 46 the subtracting wheels 49^1,

FIG. 2.

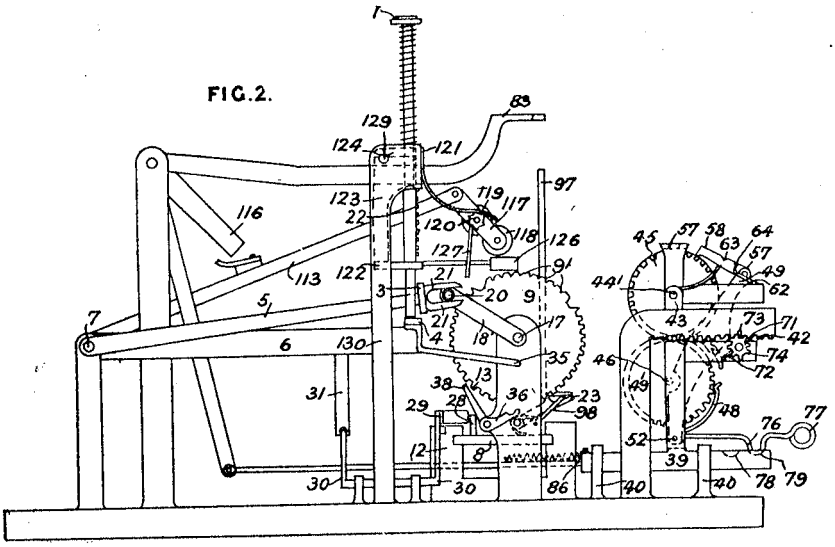

FIG. 1.

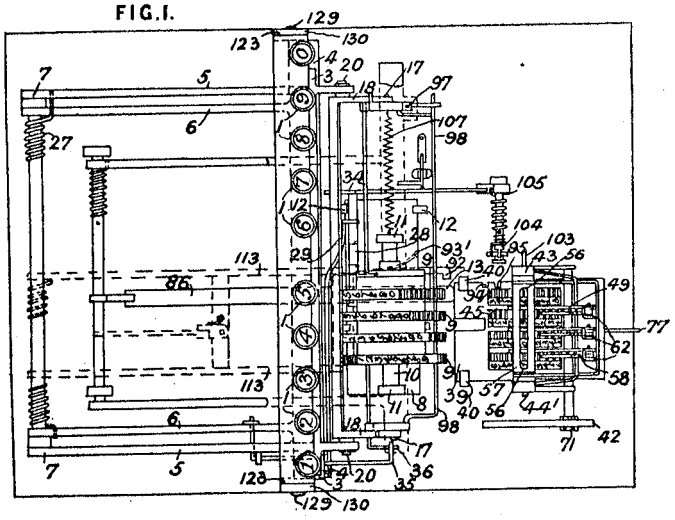

© B O B Williams Printed22/11/2023 CalcPatents Ed. 1.doc

Martin W H 135671 of 1918 Poly slide rule for steel sections

135,671. Martin, W. H. Dec. 21, 1918.

FIG. 2.

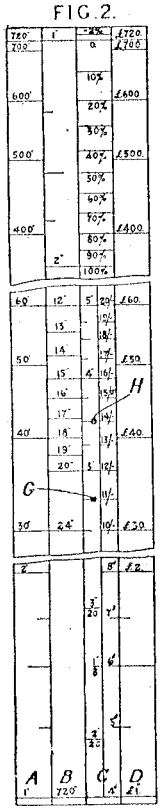

FIG. 3.

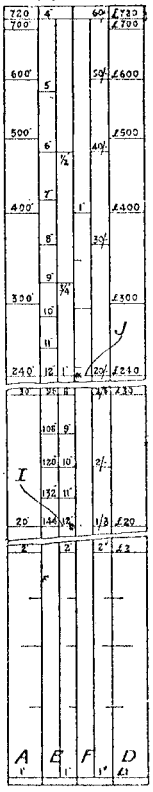

Slide-rules.—Comprises improvements in rules specially modified for computing values and percentages of materials such as steel and iron ship's and other plates, angles, hull-plates and angles, channels, T and Z bars, H-girders, round, square, and flat bars, and timber and other materials. The base carries similar logarithmic scales A—D, numbered for length and values respectively; the slide B is reversely graduated for breadth and width and a second slide C for rates and thickness and at one end for percentages. Indicators G, H are inscribed on the slide C to enable appropriate settings to be made. On the reverse side of the slides shown at E—F, Fig. 3, the slide E, the reverse of B, carries superficial width and thickness scales and an indicator I for setting, and the slide F, the reverse of C, carries a scale for rate, a scale similar to one of the scales on the other slide reversed, and an indicator J for setting.

Martiny & Co 2848/1874 Multiply tab calc

2848. Browne, A., [*Martiny, J. L.*, trading as *Martiny & Co., J. L.*]. Aug. 18. [*Provisional protection only.*]

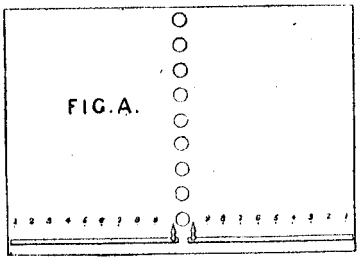

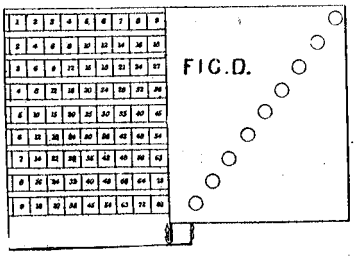

Calculating-apparatus.—An apparatus for obtaining the product of two numbers consists of a flat box, the cover of which, shown in Fig. A, is formed with a transverse central row of nine holes and with two slots at the bottom. The integers from 1 to 9 are printed on the cover above the slots as shown. The two plates shown in Fig. D slide within the box, and are provided with pointers which move along the slots opposite to the numbers. By sliding the plates until the pointers are opposite to the numbers desired to be multiplied, the result will be indicated through one of the holes in the cover of the box. The integers may be differently coloured, and the plates and box adapted to the multiplication of numbers of more than one digit.

Maschinenfabrik Moenus AG 14863/1907 Area measure

14,868. Bauer, C., [*Maschinenfabrik Moenus Akt.-Ges.*]. June 27.

Calculating-apparatus. — In apparatus for measuring the area of leather, skins, &c., of the kind in which a number of parallel measuring-wheels are mounted upon a single shaft and are rotated by the material as it passes beneath them, the indicating-mechanism is of the form in which weights proportional to the area measured are placed upon a weighing-apparatus; this is effected by a rack-and-pinion mechanism giving a positive transmission effect and readily permitting of standardizing and zeroizing. The hide in passing between the feeding and measuring wheels *a*, *b* lifts the latter and brings its pinion into gear with the corresponding member of a series of similar racks *d*; the rack moves to the left and thus diminishes the proportion of its weight borne by the beam *g* of a weighing-machine. When the detent pawls *i* are thrown out of action, the bars automatically move down the slope into their zero position as determined by the stop *j*. An alternative form is described for machines in which the feed and measuring wheels alternate, and the latter have no vertical motion; in this case, the rack bears by means of a roller upon a bar, which rests at one end upon a fixed support and at the other upon the beam of the weighing-machine.

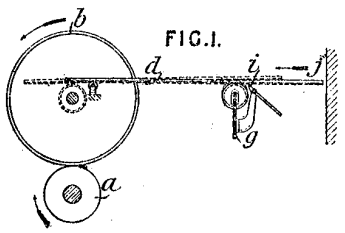

FIG. 1.

© B O B Williams Printed22/11/2023 CalcPatents Ed. 1.doc

Maschinenfabrik Moenus AG 18752/1913 Area of hides

18,752. Maschinenfabrik Moenus Akt.-Ges. Aug. 23, 1912, [*Convention date*].

Surface areas, computing. — In machines for measuring the area of leather &c., by summing the rotations of co-axial adjacent measuring-wheels, the wheels and associated toothed sectors, which are usually raised and lowered, respectively, to co-operate with each other through pinions attached to the measuring-wheels, are so arranged that no matter what the thickness of the material being measured may be, the teeth of the pinions and the sectors are engaged practically to the same extent. Special provision is made to prevent excessive engagement. The upward movement of the measuring-wheels 1, due to the passage between them and a roller 2 of the leather, is transmitted through a magnifying system of levers 4, 8, 11, 10, so that the right-hand arm 10 of the counterbalanced lever 11, 10 falls appreciably for a slight movement of the measuring-wheels. This fall of the arm 10 allows the arm 13 of a lever 15, 13 carrying the toothed sectors 7 to fall also, the two levers being normally separated

FIG. 1

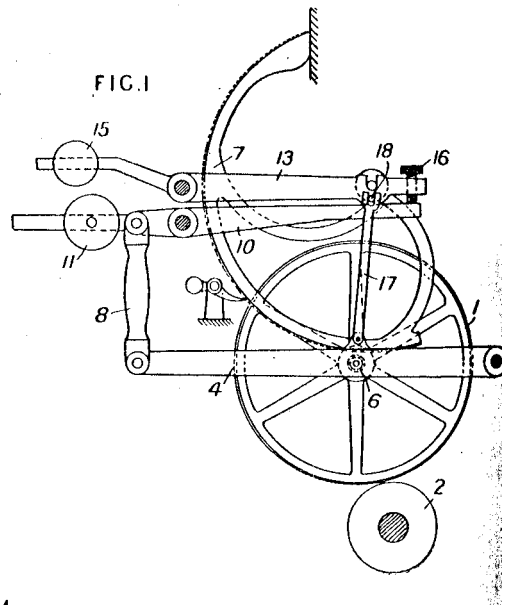

Maschinenfabrik Moenus AG 2185/1914 Area of hides

2185. Maschinenfabrik Moenus Akt.-Ges. Jan. 27, 1913, [*Convention date*].

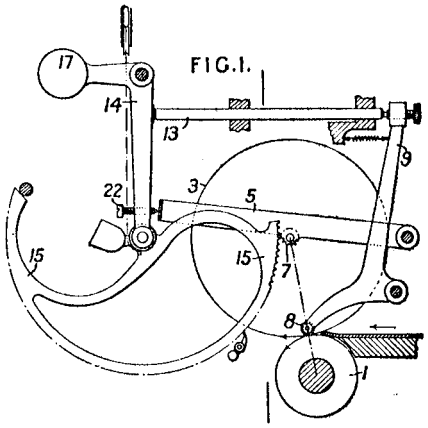

Surface areas, computing. In apparatus for measuring the area of leather &c., (1) the usual measuring-wheels are normally disconnected from the toothed sectors, and their upward and rotational movements, on the entrance of the leather sheet and until the forward edge of the leather attains a position corresponding to the line of contact between the measuring-wheels and feeding-roll, do not cause the engagement of the wheels and sectors and consequently have no effect upon the measurement

540

Masera S 13957/1902 Slide rule scale on endless band

13,957. Masera, S. Oct. 12, A.D. 1901; [*date applied for under Patents Act, A.D. 1901*].

FIG. 3.

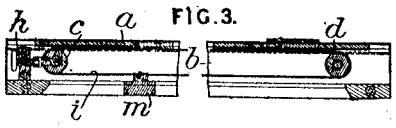

Slide-rules.—One of the scales, in the form of an endless band *i*, is mounted on rollers *d*, *c* in the casing *b*. The tension is regulated by a screw *h*. The fixed scale is secured on the underside of a sheet of glass *a*. The flexible scale is moved by means of a stud *m* fixed to it and moving in a slot.

Maskelyne J N 76/1890 Cash register

76. Maskelyne, J. N. Jan. 2.

FIG 5.

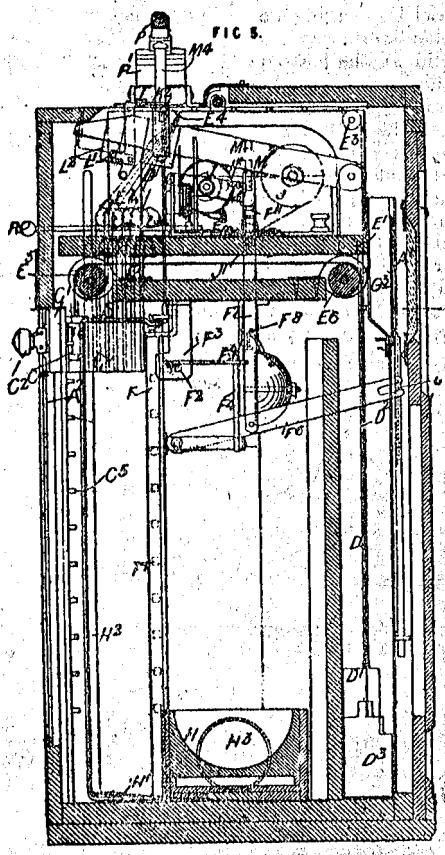

Receipts, checking and recording.—Relates to a registering-till arranged to exhibit the amount of purchase through a window and print the same on a registering-strip within the casing and also upon the customer's bill. The mechanism is "set" from the back by the attendant pulling down slides C^1 with knobs C^2 in a series of vertical graduated slots A^2. The knobs are drawn down for various distances according to the digits of the sum to be exhibited. Spring catches C^4 then engage with pins or recesses C^5 and retain the slides. To arms C^6 attached to the slides C^1 and bent away at right-angles, as indicated in dotted lines, are fixed a series of duplex bands D, D, one of each pair passing over pulleys E^2, the table E^4, and the pulley E^3, and the other over the pulleys E, E^1, both being attached to the weight D^1 at the end. Another set of bands D^2, passing over pulleys E^5, E^6, are also attached to the arms C^6 and carry weights D^3 at their ends. The bands D, D are of india-rubber backed with tape and are provided with types which are inked by passing under a roller. The bands D^2 are printed with corresponding numbers to show through the window A^1 when a shutter G^3 is removed. After being "set," the apparatus is actuated by pulling down a handle P, pivoted on the top of the case, depressing the bolt M^4, and so the pivoted lever M. The rod F^7 is thus depressed, opening the shutter G^3 by the lever F^6, while the projection F^8 actuates the tail F^9 of the gong hammer. The rollers J, J^1, between which the register strip is wound, are advanced by pawl and ratchet mechanism, actuated by a projection on the rod F^7, and then the tappet M^2 strikes one end of a lever J^1, the other end of which throws up the type on the lower band D against the registering-strip; further, the lever F^6, acting on a bell-crank F^4 and connections, rocks the rod F on its longitudinal axis and brings arms over the arms C^6 so as to lock them in position. A pad P^1 is brought down upon the customer's bill, printing the amount, and by means of type K^2 the acknowledgment of receipt. The type K^2 is usually covered by an inking-pad on the lever L, which is removed by the finger L^2 on the lever M striking the pin L^1. Subsequently the lever M depresses the rod H^2 and releases the spring catch H^1 of the till drawer H, which is then thrown out by a spring H^3. The type-bands &c. remain locked by a spring catch engaging a slot in the rod F^7 until a second handle R is actuated, when the catch is freed, the rod F is swung back, and bent arms S strike the catches C^4 and release them so that the parts return to their normal position.

7

with knobs C^3 in a series of vertical graduated slots A^2. The knobs are drawn down for various distances according to the digits of the sum to be exhibited. Spring catches C^4 then engage with pins or recesses C^5 and retain the slides. To arms C^6 attached to the slides C^1 and bent away at right-angles, as indicated in dotted lines, are fixed a series of duplex bands D, D, one of each pair passing over pulleys E^2, the table E^4, and the pulley E^3, and the other over the pulleys E, E^1, both being attached to the weight D^1 at the end. Another set of bands D^2, passing over pulleys E^5, E^6, are also attached to the arms C^6 and carry weights D^3 at their ends. The bands D, D are of india-rubber backed with tape and are provided with types which are inked by passing under a roller. The bands D^2 are printed with corresponding numbers to show through the window A^1 when a shutter G^3 is removed. After being "set," the apparatus is actuated by pulling down a handle P, pivoted on the top of the case, depressing the bolt M^4, and so the pivoted lever M. The rod F^7 is thus depressed, opening the shutter G^3 by the lever F^6, while the projection F^8 actuates the tail F^9 of the gong hammer. The rollers J, J, between which the register strip is wound, are advanced by pawl and ratchet mechanism, actuated by a projection on the rod F^7, and then the tappet M^2 strikes one end of a lever J^1, the other end of which throws up the type on the lower band D against the registering-strip; further, the lever F^6, acting on a bell-crank F^4 and connections, rocks the rod F on its longitudinal axis and brings arms over the arms C^6 so as to lock them in position. A pad P^1 is brought down upon the customer's bill, printing the amount, and by means of type K^2 the acknowledgment of receipt. The type K^2 is usually covered by an inking-pad on the lever L, which is removed by the finger L^2 on the lever M striking the pin L^1. Subsequently the lever M depresses the rod H^2 and releases the spring catch H^1 of the till drawer H, which is then thrown out by a spring H^3. The type-bands &c. remain locked by a spring catch engaging a slot in the rod F^7 until a second handle R is actuated, when the catch is freed, the rod F is swung back, and bent arms S strike the catches C^4 and release them so that the parts return to their normal position.

Mason J H 21832/1914 Adder concentric circles

21,832. Mason, J. H. Oct. 31.

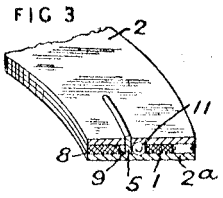

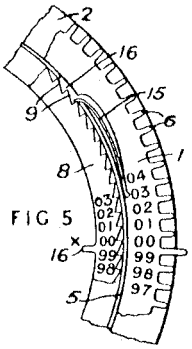

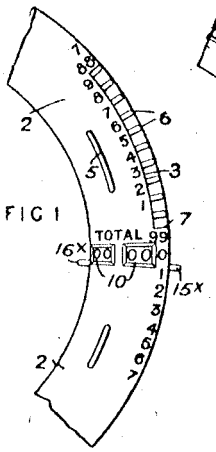

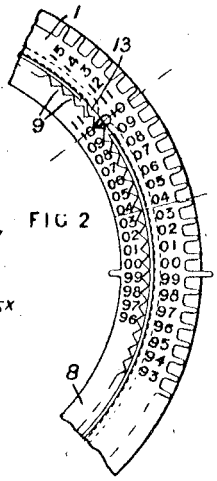

Adding - apparatus.—In devices of the kind comprising concentric disks mounted in a casing provided with sight-openings, the casing is formed of upper and lower rings 2, 2ª connected by a web 5, on either side of which are mounted rings 1, 8 each bearing numerals 0 . . . 99. Numerals corresponding to those on the units and tens ring 1 are also carried by the outer edge of the casing 2. An opening 3 is formed in the casing at the side of which are carried numerals 1 . . . 9, and through which are visible teeth 6 formed on the ring 1. Ratchet or like teeth 9 are carried by the hundreds and thousands ring 8 to co-operate with the transfer device. Either ring may be set to show a number at the sight-openings 10 by means o protruding teeth 15×, 16×, which may also b used for zeroizing purposes. Computation i effected by moving the ring 1 by the insertio of a pencil or the like between the teeth opposite the required numeral and moving i until stopped by the end 7 of the opening, o by moving the tooth 15× to the numeral show on the outer edge of the casing.

Matthews S & Williams S J A 1083/1907 Adder to check codes

1083. Matthews, S., and **Williams, S. J.**
Jan. 15.

FIG. 1.

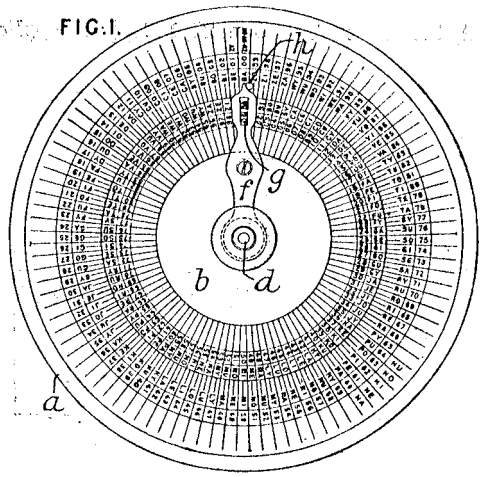

Calculating-apparatus.—A dial form of adding-machine is described for use in checking telegraphic figure codes and the like, more particularly of the kind in which consonants and vowels alternate in permissible combinations, and a hundred different units formed of a consonant followed by a vowel are employed, each represented by its own number. The numbers corresponding to the several units of a word are then added together, and the resulting number, or the two last figures thereof, corresponds to an additional unit which is suffixed to the word. For this purpose, a recessed circular bed-plate *a* carries a circular disk *b* loose upon it, and both are graduated with the series of numbers and letter-pairs, but in opposite directions. The disk is turned by means of a central knob *d* to bring any required pair of numbers opposite one another; a loose arm *f* is then brought against a fixed zero pin *h*, and the sum is read in a window *g*.

44

Matierie M 831/1885 Log scale on tape measure

831. Lake, W. R., [*Matierie, M.*]. Jan. 20.

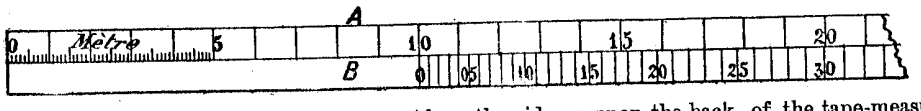

Measures of length ; calculating-apparatus.—Along the side, or upon the back, of the tape-measure or scale A is printed a corresponding logarithmic scale B, so that calculations of cubical contents, weights of cattle, &c. may be readily made.

Matsson E E 7346/1891 Add, multiply,coaxial cylinders

7346. Matsson, E. E. April 28.

Calculating-apparatus for addition and multiplication. A sleeve A, pierced by one turn of a spiral slot, and a fluted roller C threaded through loose decimal numbering-wheels D, are mounted coaxially in a cylindrical casing E, with a reading-slot, and can be turned by sliding the sleeve on a rod G, having a head pin H, guided by a straight slot in the casing. The amount of revolution of the sleeve is determined in tenths by means of a telescoping stem, consisting of two tubes I, K, the former having a pin V to engage vertical slots U, graded in length, in the latter. Any slot is brought under the pin by turning the tube K over a dial L, Fig. 7, attached to the bottom of the rod G. Each of the numbering-wheels D, Fig. 5, has within a pawl P with spring Q, which engages the fluted roller, so that the two turn together either way, unless a detent (not shown) is applied on the outside of the wheel, when its return is prevented. The detent can be slid along the cylinder case and applied to any wheel according as units, tens, hundreds, &c. are to be added. Tens are carried from each wheel to the next by the device shown in Fig. 6. Each wheel carries internally besides the pawl P a spring Y with pin Z, and encloses a ring *a* which is cut down in one place and notched to engage the fluted roller. When the thin place in the ring *a* registers with a lug on the spring Y its pin Z shoots into engagement with teeth on the next wheel.

FIG. 5.



FIG 6.

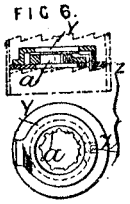

FIG. 7.

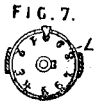

FIG 2.

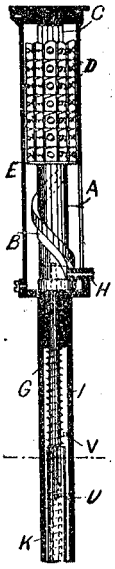

Maurand A B D 826/1863 Tab calc on many discs

826. Maurand, A. B. D. March 31.

FIG.2.*

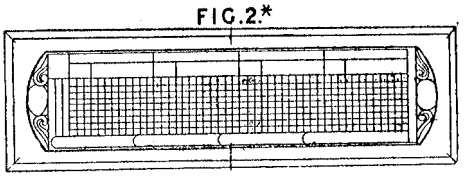

FIG.7.



FIG.4.

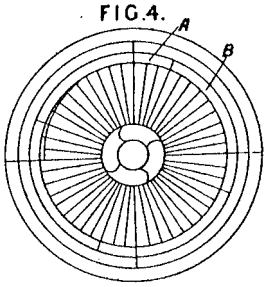

Calculating-apparatus, consisting of multiplication cards read by means of a transparent cursor, the multiplying factor for each table being some number of common occurrence in converting weights and measures into the metric system, or in calculating rates of interest. Fig. 4 is a plan of a dial type of card apparatus, shown in section in Fig. 7, where the spaces K in the box C is used for storing all the cards save the one in use, the lower cover G keeping them in place. The remaining card is the one bearing the multiplication table required on one or other of its surfaces, and is placed upon the top of the box C immediately over the air-escape hole *i*, and under a transparent cursor E mounted in the cap D, F which fits closely on the top of the box. Fig. 2* shows a box of rectangular shape with similarly shaped cards, with which a cursor sliding along the top of the box instead of rotating is employed. The argument numbers only are shown on the cards, the numbers which fill the blank spaces to the right of them being the products of these and the particular factor of the table. The spacing of all the radial lines, Fig. 4, is uniform, so that by setting the line A of the cursor on the radial line of the argument which marks the decimal point of the number required to be multiplied, the second line B of the cursor will give the decimal point of the answer, the number in the argument and its product in the body of the table being all on the same concentric circle.

Several examples See [21]

Maurice J 1392/1863 Scales and tables on a sheath on a roller ruler

1392. Maurice, J. June 3.

Measures of length; calculating-apparatus.—Scales of length, tables of weights and measures, and other information are engraved or otherwise provided on a sheath or equivalent in which is mounted a cylindrical or roller ruler.

Mason J W 9223/1889 Local times

9223. Mason, J. W. June 4.

Calculating-apparatus. — Relates to means for showing different local times. A map of the world laid out on a circle with radiating lines, having the North Pole as centre, is rotated by clockwork or set by hand within a ring marked with 24-hour graduations.

Mastaglio M 28252/1908 ASMD

28,252. Mastaglio, M. Dec. 28.

Calculating-apparatus.—In a machine adapted to deal with calculations according to the four rules, actuation of the various parts is performed by the keys and levers which set the factors, the various controlling-levers effecting merely engagement or disengagement of certain sections of the machine. For each factor there is but a single bank of keys, which are coupled in turn to receiving &c. wheels of different denominations by the intermittent rotation of certain denomination-selecting shafts carrying helically arranged cam-parts which effect the coupling of pairs of gear wheels by means of broad pinions, thus dispensing with a traversing carriage. For this and similar purposes, movements common to all the keys of a bank are derived from universal members operated towards the end of the

833

downward movement of a key-lever. There is a complete addition train with item-indicating, totalizing, and printing-wheels which may print either

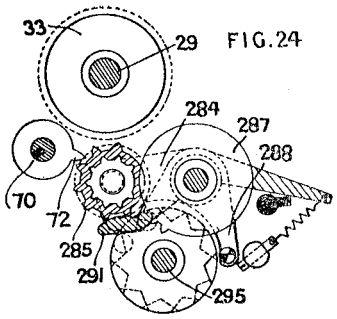

FIG.24

items or totals ; in multiplication this train is employed to make the differential selection for the various denominations which determines the action of the multiplying cylinder. The printing operation may be performed at any time by means of an external handle.

The first factor, or an item of an addition sum, is set by successive depressions of key-levers *a*, Figs. 1 and 29, which rotate differentially a cylinder 3, Fig. 5, having slots of different lengths for engagement with links 5 connected to the levers. A spring-controlled universal bar resets the keys. Downward movement only of the keys is communicated by a bevel segment and pinion 15, 17 and a one-way clutch 19, 20, 21 to a pinion 22, forming part of a three-bevel reversing gear controlled by the subtraction lever c^1, and thus to the main adding shaft 29. There is a wheel 30 upon this shaft for each denomination, and by broad pinions 34 any one of these may be coupled to the adjacent wheel 31 with its transmission wheel 33, the coupling-pinions being upon sliding holders operated by helically-arranged cams 39 upon a shaft 38 which, for the purpose of selecting the denomination, is rotated step-by-step at successive movements of the universal bar in a direction determined by the subtraction lever. Integral with each of these pairs of wheels is a zeroizing wheel 32, which, when the coupling-wheels are displaced longitudinally, moves

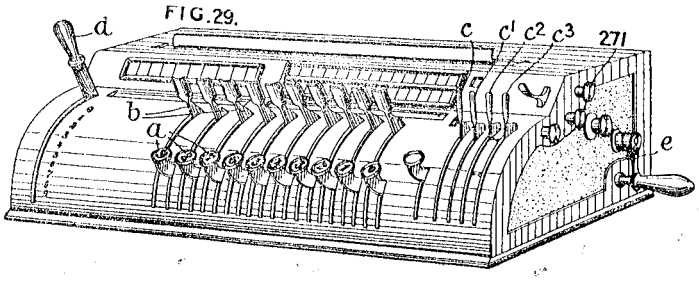

FIG.29.

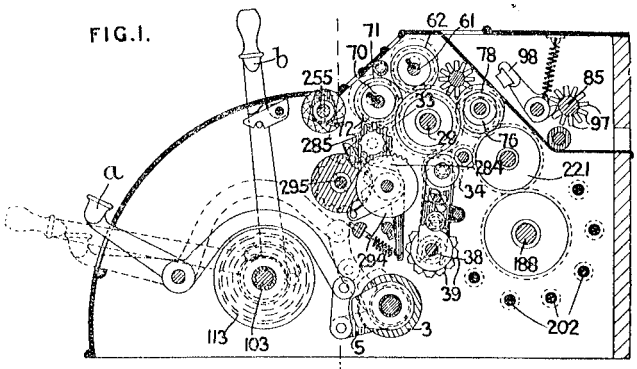

FIG.1.

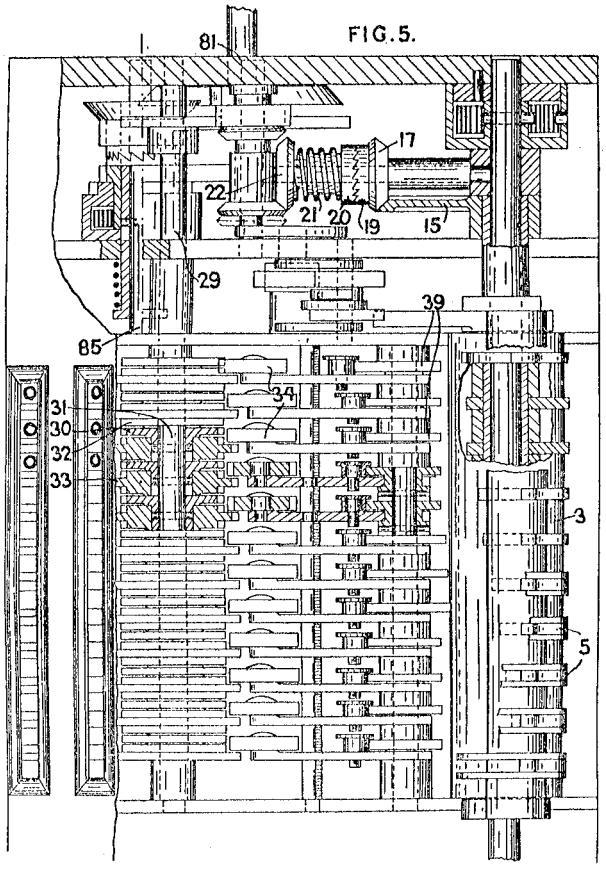

FIG.5.

More drawings and text omitted

Mather J C 5158/1915 Lazy tongs calc

5158. Mather, J. C. April 6.

Proportional calculators; logarithmic calculators. — In a proportional calculator, a graduated extensible member is adapted to be superposed on an ordinary scale of fixed length. One form of the extensible member comprises a lazy-tongs, Fig. 3, graduated as shown. In modifications, springs are used, either spiral as shown in Fig. 4, or flat, jointed alternately at the ends and middle. If the outline of the lazy-tongs or spring is made of varying width

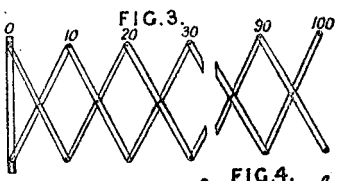



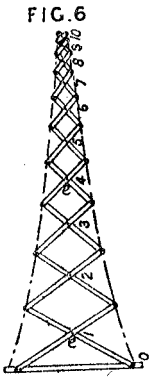

as shown in Fig. 6, so that the distances between the joints *e* are unequal, the calculator may represent a mathematical function other than that of direct proportion; for example the distances of the joints may be proportional to logarithms. Spring clips may be placed on the extensible member in any position to form handles to expand the member and to mark any desired points.

Matjeka O R 19506/1912 Tab Calc

19,506. Matjeka, O. R. Aug. 26.

Tabular calculators.—Apparatus for calculating the price of merchandise comprises a canvas wound on two rollers and reading against two fixed scales, one of which *g* is divided metrically, the other *h* into centesimals of a pound. The canvas has three divisions, one 2 giving the price per unit, another 1 giving the price of whole multiples of unit, and the third 3 being divided into a number of parts equal to the price per unit and reading against the metric or pound divisions on the fixed scales and giving the price of fractional parts of the unit. A sliding index *j* facilitates use. A spring *m* on the spindle of the lower roll rewinds the canvas, and an index *s* screwing on the upper spindle shows the position of the canvas. A brake disk *n* engaged by a spring plunger holds the canvas against rotation by the rewinding-spring.

FIG. 1.

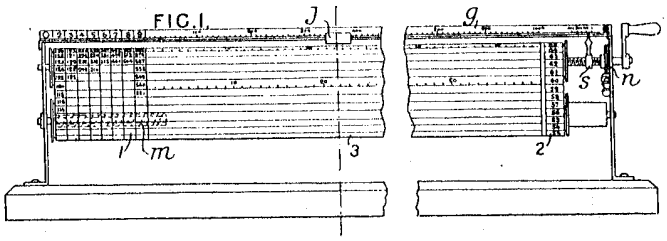

FIG. 2.

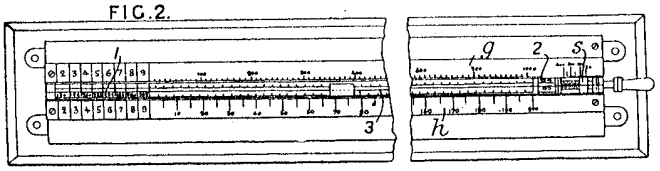

Mavitta W 9428/1907 Computing scales, slide rule

9428. Mavitta, W. April 23.

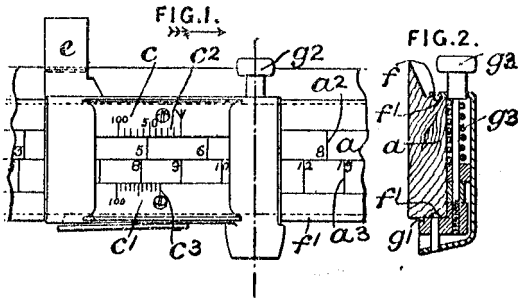

Calculating-apparatus. — In computing-scales of the type in which the main divisions a^2, a^3 of two or more different scales are marked upon the face of a rule, and the sub-divisions c^2, c^3 of the main divisions are carried upon small secondary scales c, c^1 which are attached to a cursor, means are provided for clamping the cursor in any position. A section of the device is shown in Fig. 2. The cursor is clamped to the body a of the scale by the shoe g^1, which is actuated by the spring g^3. When the clamp is rendered inoperative by pressing the push-piece g^2, the cursor may readily be moved along the scale, being guided by grooves f^1 in which slide projections f so that the sides of the projection e are maintained at right-angles to the straight edge.

Maxfield J 10987/1887 Ready Reckoner

10,987. Maxfield, J. Aug. 11.

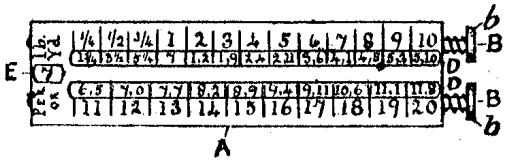

Calculating - apparatus. — Relates to ready-reckoners for affixing to purses, pocket-books, ladies' bags, and the like. Within a shallow metal case A are mounted small rollers B, B, with milled heads *b*, *b* ; a strip of paper passes between these rollers, on which is printed a table of rates per yard or lb., so that they shall appear in turn through the slot E. The prices of certain numbers of yards or lbs., at the corresponding rate, simultaneously appear in the slots D, D, opposite their respective numbers, which are impressed in the metal on the edges of the slots.

Maybaum L 17366/1879 A S M

17,366. Maybaum, L. July 23.

Calculating-apparatus. — The apparatus is for adding, subtracting, and multiplying. A rotary disc e is marked with three concentric scales e^1, e^2, e^3 marked respectively 0–500, 500–1000, 1000–1500, and carries a circular rack m with 500 teeth corresponding to the scales. A spring pointer h can be pressed down so as to bring a projection beneath it into engagement with any of the teeth of the rack, and the end of the pointer works over a fixed scale o graduated 0–100 and having stops p, q at its end. In order to know which scale to read from, a pointer a^3 with three connected arms u, u^1, u^2 is shifted from 0 to 500, 500 to 1000, 1000 to 1500, at each successive rotation of the disc e by the pin t. s is a pointer, opposite which results appear during the calculations, and r a similar pointer on the disc opposite the 0, 500, 1000 of the various scales. In using the apparatus for addition, two columns are added at once, units and tens first, then hundreds and thousands, and so on. The pointer h is moved to the lowest number of the first two columns, engaged with the rack m, and moved back to the stop q. The same movement is repeated with each number in the first two columns until all have been added. The next two columns (hundreds and thousands) are then proceeded with

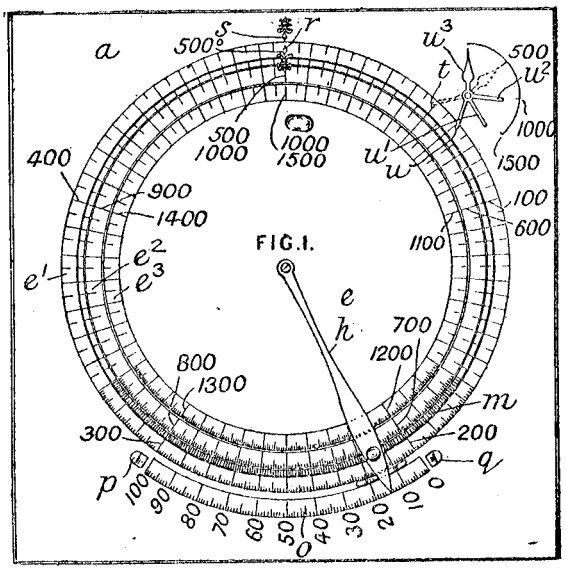

FIG. 1.

in the same way, after adding any number to be carried from the first result. Subtraction is accomplished by a reverse process, and multiplication by repeated addition.

© B O B Williams Printed22/11/2023 CalcPatents Ed. 1.doc

Maybaum L 10187/1903 Adder typewriter

10,187. Maybaum, L. May 5.

FIG.4.

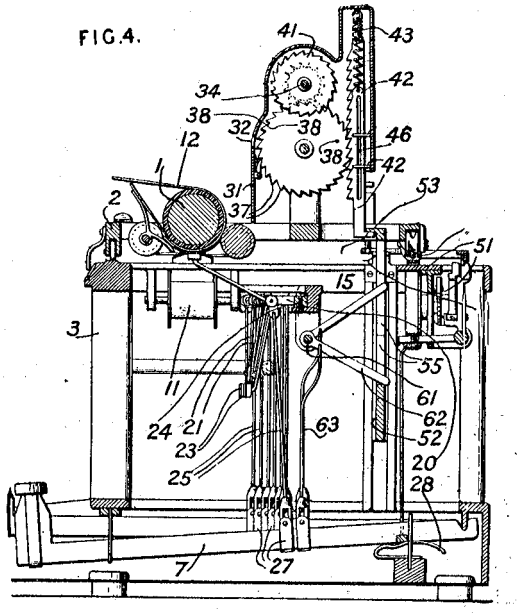

Calculating-apparatus.—A type-writer, adapted more especially for writing columns of figures in

145

Mayer M 11566/1884 Adder

11,566. Mayer, M. Aug. 23.

Adding-machines.—The apparatus, which is used for adding up columns of figures, consists of a box containing

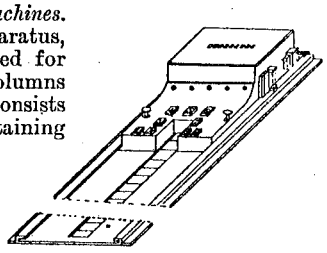

the mechanism and the finger-board, and a frame placed over the numbers to be added and in which the box is made to slide up and down. Each of the numbered keys is fitted to a lever, and, when depressed, the other end of the lever rises to a specific height. This raises a toothed driver and causes a toothed sector to move as many teeth as the figure to be added, the sector communicating its motion to the first wheel of the index. To prevent the return of the index-wheels when the key rises, all the wheels are fitted in a cradle, along which slides a curved rib-piece with a pawl engaging in a ratchet-wheel fixed to each index-wheel. When the units are added, the machine box, which has been slid, step by step, to the front of the frame, is slid right back to the other extreme end. This causes a small lever to push a piece sideways and shift the position of the curved rib-piece in the cradle to the ratchet fixed to the tens-wheel. The tens are next added in a manner similar to the units, after which the hundreds are proceeded with, and so on till the whole is added, when the result is shown through an opening in the top of the box.

Mayer M 629/1888 Adder

629. Mayer, M. Jan. 14.

Calculating - apparatus. — Relates to improvements upon the machine described in Specification No. 11,566, A.D. 1884, in which counting-wheels mounted on a common shaft are operated by key-levers. There are two forms, one of which is shown in end elevation. Each of the counting-wheels is marked peripherally with four sets of digits, visible in succession through holes *x* in the casing, and is attached to a ratchet-wheel having forty teeth. Upon the shaft of the wheels a yoke

256

constructed of two sectors joined by horizontal parallel rods L, is vibrated by the operation of the key-levers pivoted at y^6, the motion being communicated through a lever frame s^1, connected by links s^0 to the yoke and engaged by hooks h^1 on the levers.

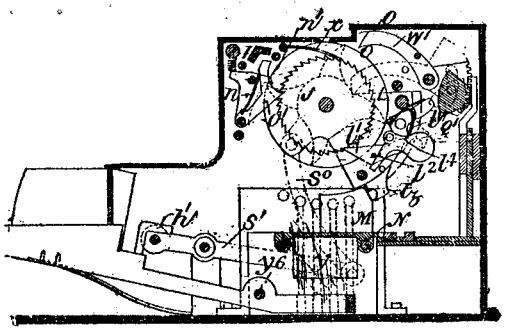

The key-levers also lift wedges which thrust out spring pins *y* to engage lugs *tz* upon the yoke and limit its motion. Four of these pins are at one end of the case and five at the other. Along the two rods L of the yoke a metal bow bearing a pawl l^1 ran be slid so as to put the pawl into engagement with any ratchet-wheel. The shifting of the bow is effected by a pawl bar and a racked slide N carrying two upright pieces M which engage the bow. The pawl is pressed against the ratchet by a spring, but may be turned away by a triangular roller Q^1. A small heavy pendulum l^4 in contact with a pin l^2 increases the pressure of the pawl, at the moment the yoke is stopped, sufficiently to prevent further advance of the ratchet owing to momentum. A spring pawl at the top prevents any return movement. The transference of the tens from any wheel to the next is effected by T-levers *n* with pawls o^1 and four-rayed stars J attached to the wheels. A star lifts its corresponding T-lever and the pawl of the lever advances the next wheel. A rod I by holding the pawl *n* prevents a second tooth from slipping past. The wheels are at any time set to zero by levers W^1 which engage the stars and are turned by a toothed sector and rack. The other form of the machine has only two numbering-wheels, placed horizontally. The one is a large ratchet-wheel of a hundred teeth, and is marked on its upper face with corresponding numbers, and the other is a spur-wheel which is driven by a pinion on the axis of the first and counts the hundreds. A single horizontal sector replaces the yoke and sliding arc, and the keys lift pins directly into the path of notches upon the sector.

McCaskey Electric Calc Co 9563/1911 ASMD Print

9563. Marks, E. C. R., [*McCaskey Electric Calculator Co.*]. April 19.

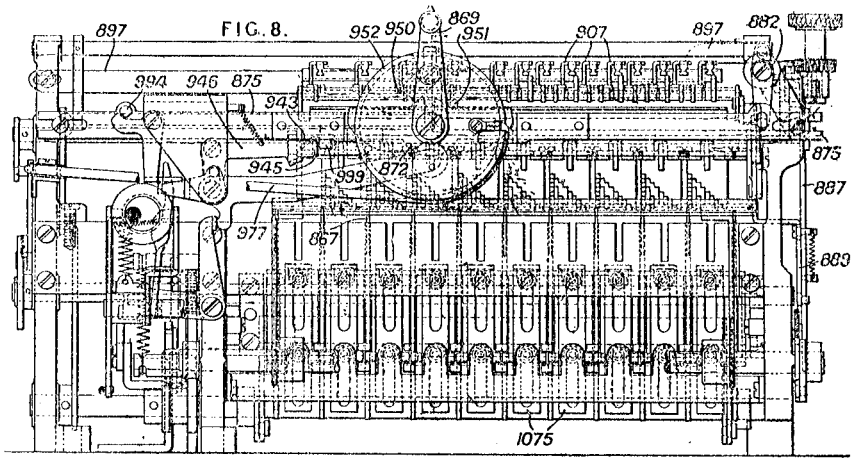

Multiplying-apparatus. — A single-bank keyboard, motor-operated printing, adding, and subtracting machine, of the kind described in Specifications 4376/12, 4680/12, and 5651/12, is provided with a multiplying-section controlled by a multiplying-lever, according to the adjustment of which the depression of successive numeral keys results in the setting either of multiplicand slides or of multiplier stops, with or without the printing of these quantities, the partial products being subsequently taken off from the multiplicand slides which automatically and successively take up settings in a direction at right-angles to their original settings according to the positions of the multiplier stops. The keys position the multiplication parts by the agency of the usual differential and denomination-selecting mechanism and main slides, and the partial products are in turn communicated to the main slides for registration upon the totalizer, the method being to add first the so-called 'units' values obtained by multiplying the multiplicand by the highest digit of the multiplier, then the 'tens' values produced by the same multiplication, and afterwards the similar quantities for the lower digits of the multiplier in descending order. The invention relates principally to (1) the partial-product representation devices constituting the multiplicand slides upon the multiplicand carriage; (2) means for setting and indicating the multiplicand; (3) means for setting and indicating the multiplier; (4) the communication of the selected partial products to the main slides and registration thereof upon the totalizer; (5) the final operation whereby most of the parts may be reset and the product printed.

(1) There are nine slides 862, Figs. 13 and 45, each formed of nine sections rigidly secured together, and each section being recessed upon its lower side to represent alternately the tens and units of the products of the figures 1 to 9 by one of those digits, thus, Fig. 35 represents the '2' section. The slides, as shown in the side elevation in Fig. 13, are placed, with their sections longitudinally, in a carriage movable transversely across the machine on rollers 964, 968 bearing respectively upon fixed cross-plates 966, 218, in order that the various slides may be selected seriatim, and from each slide a desired section set at the operative position as a multiplier digit by a control of the movement, for which purpose there is upon the carriage an horizontal plate 973, Fig. 30, having a stepped edge co-operating with adjustable stops 987a, one for each denomination. Each slide is capable of independent longitudinal movement upon the supporting-plates 855 of the carriage in order to select the digits of the multiplicand.

(2) To set the multiplicand, the number is first set up, by depression of the proper keys in sequence, upon a stop-field associated with the differential and denomination-selecting mechanism of the adding-machine, and the operator then moves to the right a multiplying-lever 869, Fig. 8, at the front of the machine, whereby a cam 872, acting through a slide 875, shaft 882, link 887, hook 889, and various associated parts, rocks a transverse shaft 893, Fig. 13. Upon this shaft are fingers 894, the upper ends of which determine the connexion, by means of links 863, between the main slides 213 and the multiplicand slides, one of the depending fingers 866 of each slide being selected for this purpose. To indicate the number set upon these slides, multiplicand-indicating plates 907 are provided upon the top of the machine, and are each adapted to display one numeral through a window, the plates being urged rearwards by springs 908, and held in a set position by means of ratchet teeth 909 and pawls 910. For the purpose of setting these indicating-plates differentially according to the multiplicand, links 900 are provided in constant engagement with main-slide levers 205, and at their forward ends these links stand normally to the rear of and between laterally-arranged lugs upon the indicating-plates mentioned and corresponding members of a similar series of alternating plates for indicating the multiplier, the

© B O B Williams Printed22/11/2023 CalcPatents Ed. 1.doc

McCombie T G F 22584/1904 Chart rule & scale for nav.

22,584. McCombie, T. G. F. Oct. 20.

Calculating apparatus.—A chart rule and scale of the form shown is provided at one end with a semicircular protractor *d* graduated with radial lines, to quarter points of the compass, and with a scale *e* of miles, from the graduations of which concentric semicircles are described. An oblong piece *x* of xylonite with a series of longitudinal parallel lines is used in conjunction with this protractor to enable positions and distances to be determined from bearings and distance run.

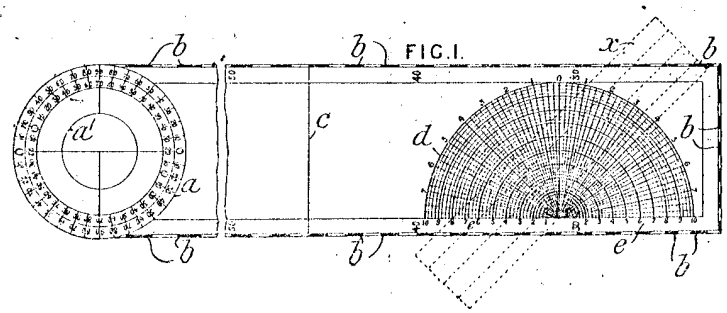

McIndoe J 13796/1914 Tab calc for interest

13,796. McIndoe, J. *Dec. 7.*

Tabular calculators.—**A calculator for interest** &c. has a number of bands *n* wound between rollers *l*, *m*, Fig. 4, arranged between bent partition strips *o*, which are held down by side strips *q*. The lid *f* folds back to act as a stand for use of the machine in an inclined position. Each band has at the left-hand end the capital sums of its denomination, and along the strips in roman figures are the interest for one year for the various rates represented upon a fixed scale *u*. In italic figures are shown the proportionate amounts for a given number of days of the capital sums, which are then used

FIG.4.

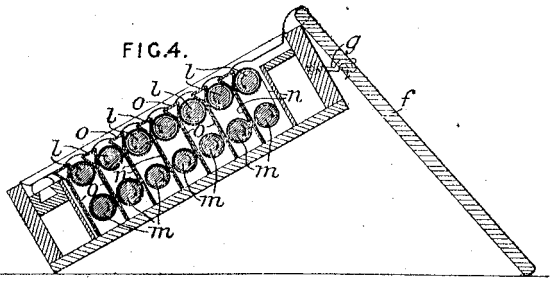

572

to give the equivalent interest for various numbers of days. In the use of the instrument, a given capital sum is set by means of the various denominational bands and the interest at any given rate is read by adding up the various partial products below the rate, a cursor *w* being used. In Fig. 3, the number set is £45,625 6s. 2d., and the cursor is set to give

FIG.3.

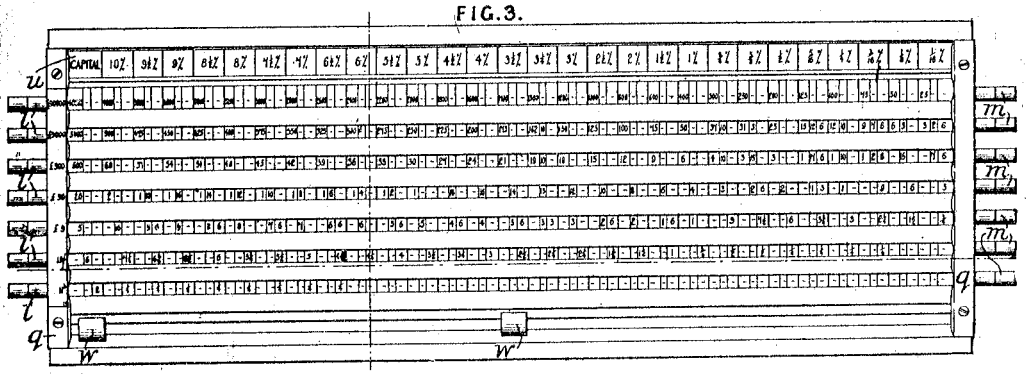

FIG.6.

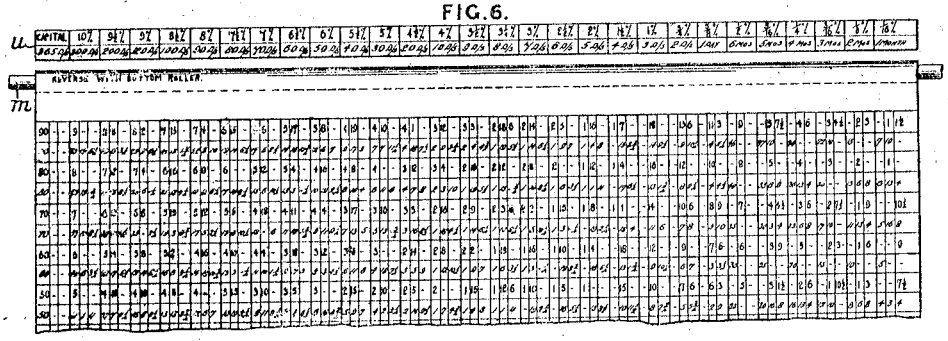

the interest at 3½ per cent, namely £1596 17s. 8½d. To find the corresponding interest for, say, 60 days, this sum is set up as a capital sum, and the result is read by the italic figures in the corresponding columns.

McLean D W 21658/1910 Adder, game scorer

21,658. McLean, D. W. Sept. 17.

Adding - apparatus.—An adding and scoring apparatus for games has a disk 1 with two series of numbers 2, 3 arranged in opposite directions on the disk and visible through apertures 7, 8 in a screen 4. To the disk 1 is attached a ratchet-wheel 10 rotated by means of a pawl 21 on a handle 20 loosely mounted on the hub of the disk 1. The handle is provided with a pointer 17 which indicates on a fixed scale A the number added. The number of games or

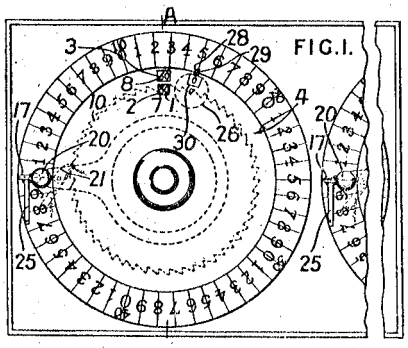

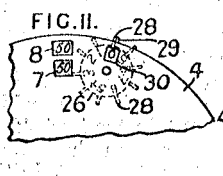

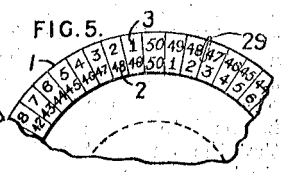

revolutions of the disk 1 are indicated by the numbers on a disk 26 visible through an aperture 30. The disk 26 has a number of radial arms 28 adapted to be engaged by a pin 29 on the disk 1 at the completion of every revolution. A spring detent or stop 25 limits the backward movement of the handle 20.

Reference has been directed by the Comptroller to Specifications 13,550/90, 19,474/91, 23,151/95, 7347/02, 12,084/06, 22,721/07, *and* 15,899/08.

McCleary M 17528/1905 Adder

17,528. McCleary, M. Aug. 30.

Calculating - apparatus. —A movable band *e* is wound upon drums *d* and passes over a graduated table *c*, handles being provided for rotating the drums so that desired graduations upon the band may be brought against others upon the table; in this way, two numbers may be added. The graduations upon the table proceed from 0 to 20 and upon one column of the band from 0 to 1000; in other columns equivalent values of pence and shillings are given. Specifications No. 15,676, A.D. 1887, and No. 1034, A.D. 1894, are referred to.

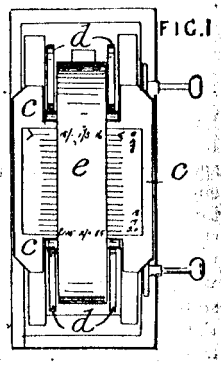

McNary W H 1988/1870 Counter for flowmeter etc.

1988. Newton, W. E., [*McNary, W. H.*] July 14.

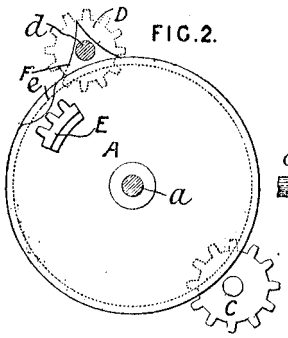

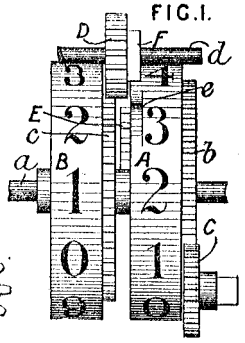

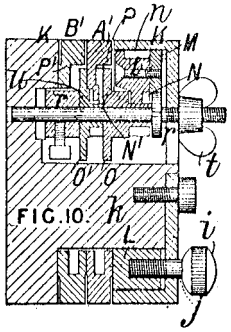

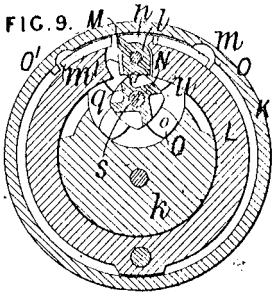

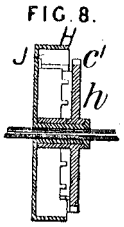

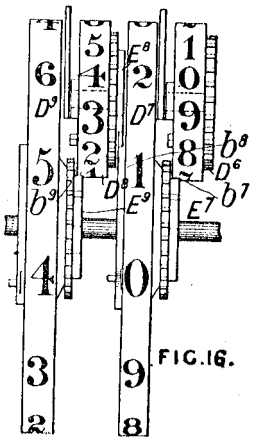

Counting-apparatus; calendars.—Relates to numbering-apparatus for steam-engine indicators, gas or water meters, calendars, and other uses. Two numbering-wheels A and B, Figs. 1 and 2, for units and tens, are loosely mounted on a shaft *a*, the numbers being exhibited through a slot or slots. The wheels A and B carry, or are connected to, toothed wheels *b* and *c*. Gearing with the former is a pinion C, actuated by the mechanism to which the counter is applied and which moves the units wheel one number for each revolution. A pinion D, running loosely on a shaft *d*, carries a stop F, which locks on the surface of the wheel A, thereby locking the pinion D, and with it the wheel *c* with which it gears. At every revolution of the wheel A a segment E gears with the pinion D, and turns the wheel *c* and number

105

McPherson J A 24616/1896 Slide rule for water flow.

24,616. McPherson, J. A. Nov. 4.

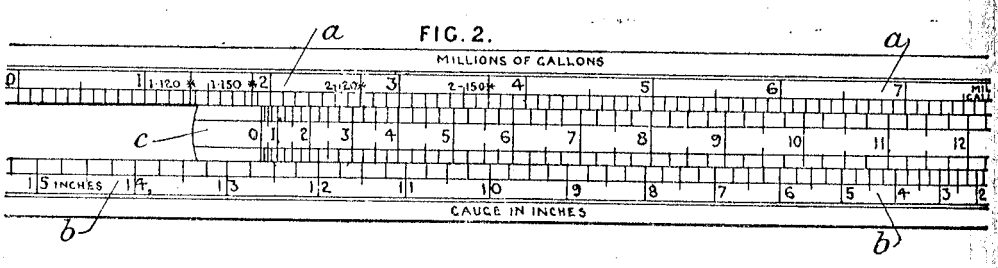

Slide-rules.—The rule is for indicating and facilitating the regulation of quantities of water flowing over the gauge-weirs of water works &c. The member *a* is divided into inches, each representing a flow of 1,000,000 gallons per 24 hours over a weir 3 feet wide. The slide *c* is graduated on both edges, so that when closed it shows the depth of water in inches required for any given flow. The member *b* is graduated with a similar scale, but in the opposite direction. The starred graduations on *a* relate to certain calculations where pumping-engines of various horse-power are employed to supplement the supply. The rule may be made circular if desired, the slide being moved by "keyless watch" mechanism. As an example of the use, suppose two weirs are open, the depths of water passing over being respectively 9½ and 6¼ inches, and it is desired to increase the former to 12 inches without altering the total quantity flowing. Set 6¼ on *c* over 9½ on *b* (*see* Fig. 2). The 12 on *b* lies under 2¼ on *c*, which gives the depth of water which should fall over the other weir.

Mees A B 5963/1898 Computing scale

5963. Weighing-apparatus. MEES, A. B., Comberton Villa, Stourbridge, Worcestershire. March 11.

Value-indicating apparatus.—The spring *b* of a balance is coiled round a central bar *c* which has a series of perforations c^1 corresponding to perforations c^2 in the casing *a*. A scale of prices per lb. is marked along the perforations c^2, and a pin *m* is provided for insertion at the proper place, according to the price, to cut out the required number of coils. The article, when inserted in the pan *l*, will then bring the remaining coils into action and indicate the value, the depression of the bar *f* actuating a pointer *i* on the value dial *k* by means of a rack and pinion. The apparatus may be hung to one arm of an ordinary beam weighing-machine, the weights, in this case, being placed in the pan *l*.

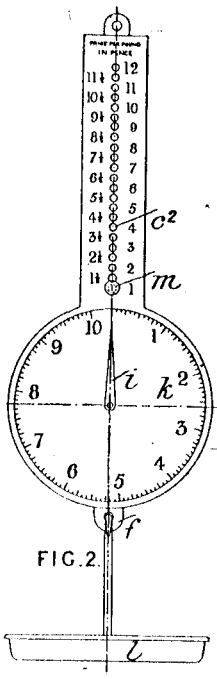

FIG. 2.

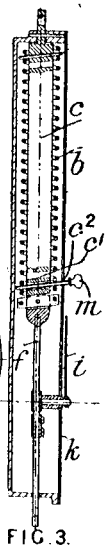

FIG. 3.

Meilicke C A 16192/1908 Tab calc for interest

16,192. Meilicke, C. A. July 30.

FIG. 3.

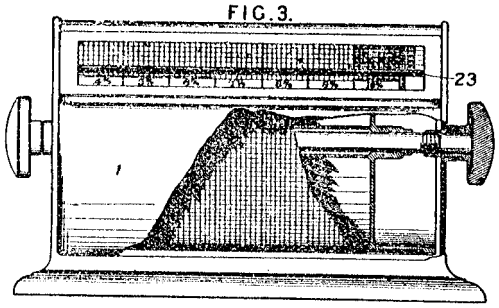

Calculating-apparatus. — An interest-calculating machine for decimal currency comprises a casing 1 having a transverse slit 23 through which a line on a chart carried by an internal drum is exposed, and a table on the casing above the slit showing the yearly interest on various amounts at rates as indicated below the slit. The drum bears a chart indicating the interest computed for each day corresponding to the amounts and rates shown below the slit at the point where its items appear. The chart may be made of metal, and may be secured in a slit 15, Fig. 5, in the casing by a wedge-piece 16 which is drawn in by nuts engaging the threaded end of rods 17 attached to the wedge.

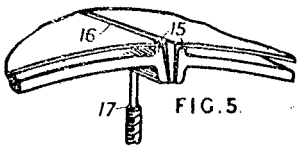

FIG. 5.

See[21]

Meilicke C A 16201/1908 Tab calc for interest

16,201. Meilicke, C. A. July 30.

FIG 2

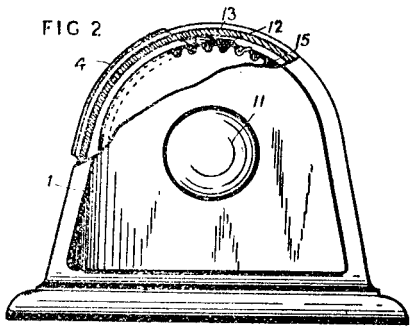

Calculating-apparatus.—Apparatus for converting decimals of a pound into ordinary currency comprises a drum carrying a conversion table 15, the drum being operated by a head 11 and arrested by a spring 13 engaging a wheel 12. An observation opening in a plate 4 in the casing 1 exposes a line on the chart, the drum being moved as required for this purpose.

Meilicke C A 16212/1908 Tab calc for interest

16,212. Meilicke, C. A. July 30.

Calculating - apparatus. — An interest - calculating machine comprises a drum bearing a chart on which the interest on various amounts at various rates is tabulated, at intervals of a day up to one year, the drum being operable by a milled head 11 through gearing 15, 16, 20, 21. Two date wheels 24, 36 abut upon the drum, and are normally driven by it owing to the engagement of springs 33, 38 with teeth 30, 31 on the drum, but may be stopped by

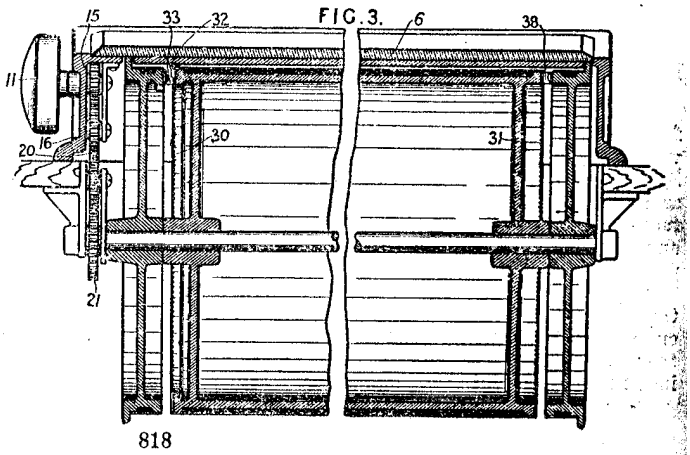

818

16,212. Meilicke, C. A. July 30.

Calculating - apparatus. — An interest - calculating machine comprises a drum bearing a chart on which the interest on various amounts at various rates is tabulated, at intervals of a day up to one year, the drum being operable by a milled head 11 through gearing 15, 16, 20, 21. Two date wheels 24, 36 abut upon the drum, and are normally driven by it owing to the engagement of springs 33, 38 with teeth 30, 31 on the drum, but may be stopped by

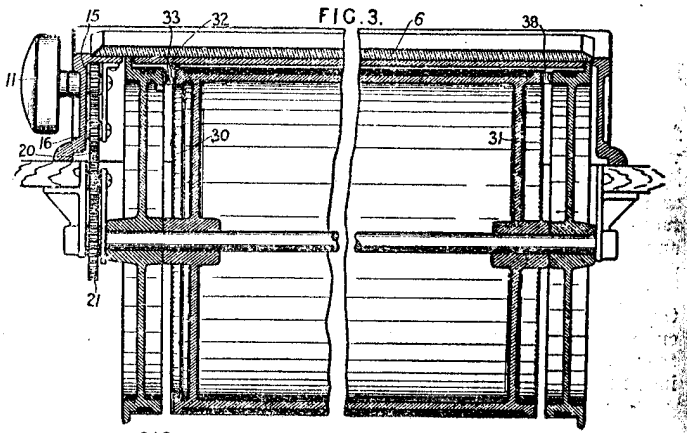

818

Meilicke C A 7109/1909 Tab Calc for interest

7109. Meilicke, C. A. March 24.

Adding and subtracting apparatus; tabular calculators.—A calculating-apparatus, for computing the number of days from one date to another and for finding the interest on a note for such given number of days, has the daily interest chart arranged on a drum which is connected by gearing to the dials on which are marked the months and days of the year.

Ready-reckoning apparatus.—The casing 1 has an opening which is covered by a plate 7 provided with a slot 8 as a sight opening. The plate 7 has two computed interest scales 9, 10, of which the scale 9 shows the interest on the amount and at the percentage set out by the scale 10, the number of years being arranged at the right-hand end of the scale 9. The drum 19 mounted on the shaft 17 has a chart secured to it by the wedge-piece 23 and is adapted to be rotated by the thumb-heads on the end of the shaft. The chart has a series of longitudinal rows equal in number to the days of the year and a series of circumferential columns, corresponding to the number of columns in the interest table 9, and showing the interest for the number of days in the row on the amount and percentage shown in the table 10.

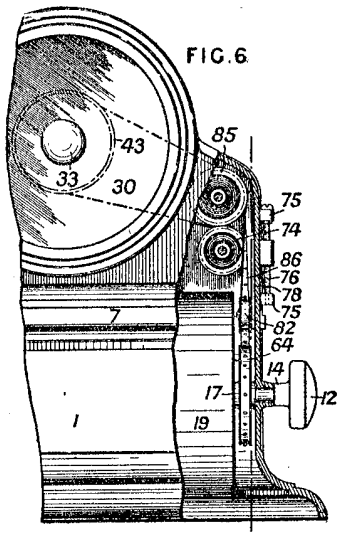

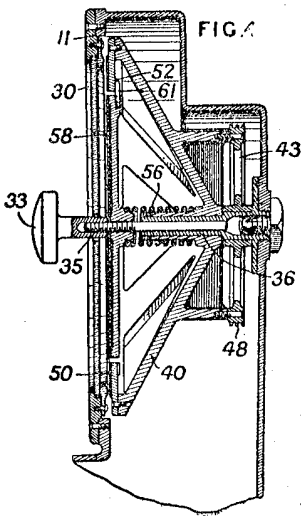

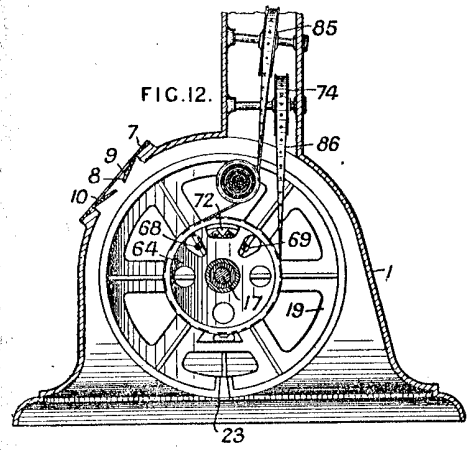

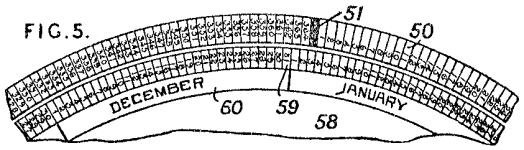

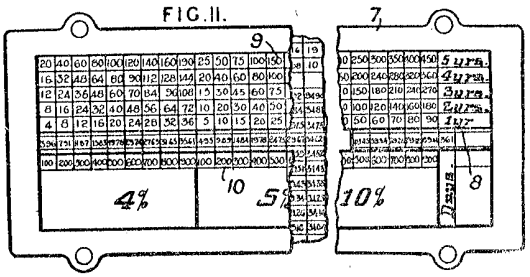

Adding &c.—In the upper part of the casing, an opening 11 is closed by a glass plate 30 having a knob 33, which receives the end of a shaft 35, the other end being supported in a sleeve 36. The inner dial is screwed on the shaft 35 and has its graduated card 58 in the same plane as the card 50 of the outer dial, which is connected by the conical-shaped wheel 40 to a hub rotatably mounted on the sleeve 36 and held in position by a nut on the end of the sleeve. The card 58 has two concentric rows of graduations, the inner one 60 being divided into 12 parts for the months of the year and the outer row 59 subdivided to give the number of days of the respective months. The card 50 is divided into 365 divisions for the days of the year. Surrounding the hubs of the dials is a spring 56, which keeps the hubs apart so that a pin 61 on the inner dial is normally in engagement with the teeth 52 on the outer dial, being disengaged when the knob 33 is pressed in. A wheel 43 is attached to the conical-shaped wheel 40 and has a number of pins 48 to act as teeth for a belt 86, which connects the dial to a similar wheel 64 on the sleeve 14 of the drum spindle. The wheel 64 is adapted to be adjusted in position by screws 68, 69 bearing on a piece 72 attached to a spoke of the drum. The belt 86, which passes over guide pulleys 74, 85, is tensioned by means of a screw 76 working in lugs 75 and having a plate 78 attached, on which is mounted a roller 82 around which the belt passes. The blackened division 51 on the outer dial appears opposite the stationary pointer on the glass plate when the blank longitudinal row of the drum appears through the opening 8.

See[21]

Meire G H 6227/1888 Slide rule for carcase weight

6227. Meire, G. H. April 27.

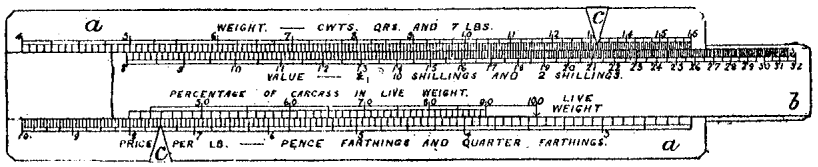

Slide-rules.—The rule may be made in various forms, and its object is to afford a means of readily calculating the ratio of the live weight of an animal to the weight of the dressed carcase, the prices of various animals at a fixed rate, the price per lb. of live weight when the price per lb. of carcase is given, &c. The Figure shows a form of the slide-rule. The slide *b* is capable of being taken out and reversed. The scales are logarithmic and, if necessary for convenience of size, may be continued in the seat of the slide and at the back, the ends of the slide and rule being employed as the reading-index. *c*, *c* are metal indices which may be set to the divisions being used on the weight and price scale. As an example, suppose it is desired to determine the price of an animal weighing 11 cwt. 1 qr., the percentage of carcase weight being 50, and the price per lb. 8*d*. Set the 50 of the percentage scale opposite 8*d*. on the price scale, and read the value (£21) opposite the graduation 11 cwt. 1 qr.

Meire GH 11493/1890 Slide Rule Index/Cursor

11,493. Meire, G. H. July 23.

FIG. 4.

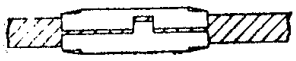

FIG. 2.

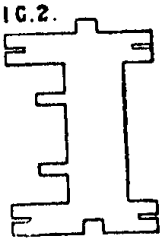

Calculating - apparatus. —Slide-rule indexes are formed from a pair of blanks, shown in Fig. 2, by bending and interlocking as indicated in Fig. 4. An elastic band holds them together, but does not press them tightly on the rule.

Meixell H J 13816/1888 tab calc date indicator for interest

13,816. Meixell, H. J. Sept. 25.

Date indicators. — The dates are marked in a longitudinal column on a strip H wound between two rollers C, E each fitted with a crank-handle outside the case. The strip is passed over a roller G holding it close to a slit K in the front of the case, and its motion is controlled by spring arms L, M. In columns parallel to the date column are marked series of dates on which bills and promissory notes for various periods fall due, the days of grace being included.

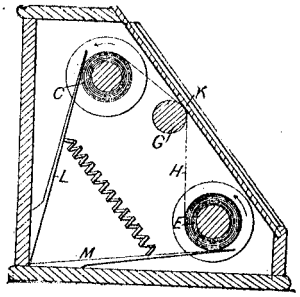

Merrick H L 5286/1908 Volume on conveyor belt

5286. Merrick, H. L. March 9.

Integrating-mechanism for measuring-apparatus.—An integrating-mechanism of the travelling-band and friction-wheel type is employed to determine the total weight of material passing along an endless conveying-belt. The belt *c* passes at one point over a group of rollers supported upon a plate *m* suspended from the shorter arm of a weighing-lever *l*, at the opposite extremity of which is a link *t* carrying adjustable weights *x* and a hollow cylinder with its perforated lower end moving in a mercury dash-pot. At another point, the belt drives a roller *e* and wheel *f* communicating motion to the endless integrating-belt *a*, Fig. 2, through the shaft *q*. The position of the weighing-lever determines the angle between the axis of the integrating-wheel and the direction of travel of the integrating-belt, and in consequence the degree of axial movement communicated to the wheel, which has a limited travel along its axle, at either end of which it completes an electric circuit and reverses, by means of electro-magnets 1 and clutch parts 2, 3, 4, the motion of the integrating-belt, either drum *b* of which is thus driven from the shaft *q*. The number of reversals as shown by a counter, and the position of the wheel read upon a suitable scale furnish a measure of the quantity integrated. Alternatively, the integrating-belt 18, Fig. 7, is always driven in the same direction, and between the vertical portions of the belt is a wheel 13 carrying a number of integrating-wheels 12 free to

7:

rotate in fixed bearings thereon. Opposite wheels bear against the belt, and a rotation of the carrying-wheel is thus produced which is a function of the angle which the plane of this wheel makes with the

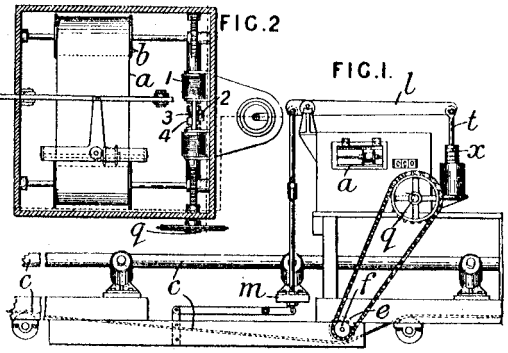

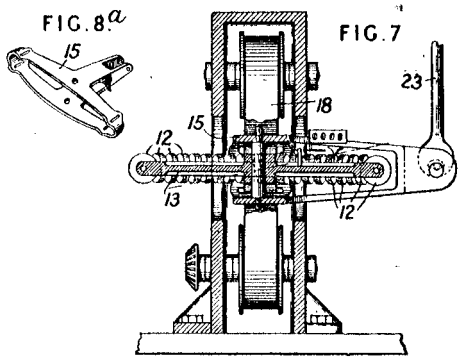

line of travel of the belt at the two points of contact. To permit the control of this angle by the weighing-lever, the carrying-wheel is mounted in a frame 15 capable of turning within limits about an horizontal axis as determined by the link 23. The rotations of the carrying-wheel are counted and fractions thereof are indicated.

Meyer G 3062/1892 Interest calc tabular

3062. Thompson, W. P., [*Meyer, G.*]. Feb. 17. *Drawings to Specification.*

Calculating-apparatus.—Consists of a pair of parallel ribbons on rollers, one of which is graduated in months and days, while the other shows the interests on a unit sum (a mark or shilling), for times in arithmetical progression from 1 day to 365. The first band is adjusted till the date from which interest is to be calculated stands against the first sum on the interest band. The interest required on unit sums is then read off against the terminal date. Interests on larger sums are then found by simple multiplication.

Mez G 16444/1913Stylus adder

3,444. **Mez, G.** July 17.

FIG. 8.

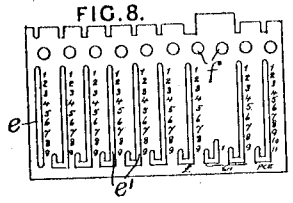

FIG. 5.

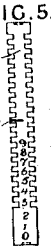

Adding and subtracting apparatus for monetary values; transfer mechanism.—Style set and actuated machines, of the kind in which the style engages with and moves toothed numeral-bearing slides, and is guided in graduated slots with hooked upper and lower extremities for effecting transfer in either addition or subtraction, are arranged for British monetary values. Upon a base-plate is mounted a second plate with slots b^1, Fig. 1, in which move projections upon the toothed slides c, Fig. 5, which have teeth upon both edges. In a fixed cover-plate d are formed the slots d^1 for the insertion of the style into engagement with the teeth on the left-hand edges of the toothed slides, the hooked extremities d^2, d^3 of the slots permitting the style at the end of the stroke to move the right-hand edge of the next higher slide through unit distance in the opposite direction. Each slide has upon an edge twice as many recesses as there are graduations upon the corresponding setting-slot, and the central tooth g is marked or coloured, the precept being that all teeth on one side of this mark are to be moved in one direction, and all teeth on the other side in the opposite direction, with transfer to the next slide. Upon the upper surface of the apparatus there is an adjustable cover-slide c, Fig. 8, with graduated slots e^1 provided with

FIG. 1.

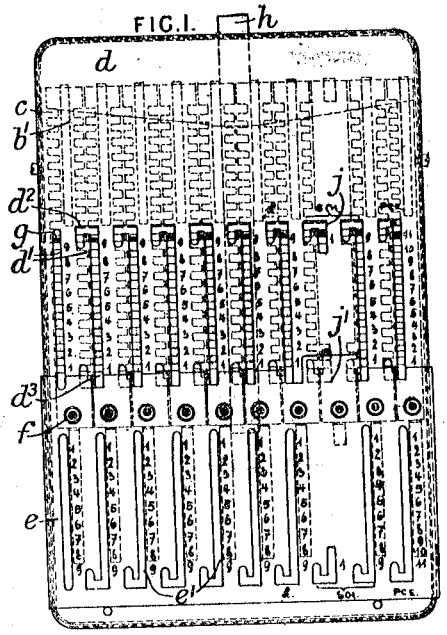

hooked extremities at the lower ends. In the addition position shown, this slide obstructs the lower ends of the fixed slots; for subtraction it is moved up until the slots are exactly superposed, in which case the upper hooked extremities of the cover-plate slots are obstructed. As shown, the graduations of the numbers of teeth in the slides are arranged for British monetary values, two separate slots j, j^1 being provided in the fixed plate for tens-of-shillings. The results appear through apertures f in the cover-slide, and similar apertures in the cover-plate, and a cross-bar with handle h is provided for resetting the slides.

© B O B Williams Printed22/11/2023 CalcPatents Ed. 1.doc

Michelson M 14698/1889 Deviation of compasses

14,698. Michelsen, M. Sept. 18.

Calculating - apparatus. — Relates to apparatus for determining the deviation of compasses. A divided disc *f*, ring *d*, and pointer *g* are rotatable separately about the centre of a fixed circle *a*. The pointer is set on the circle *a* to the true course desired, and the

FIG. 1.

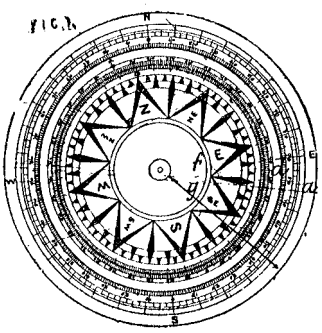

49 D

arrow on the ring *d* to the variation of the compass, while the north rhumb of the disc is set from the arrow to show the deviation of the compass. The pointer then shows on the disc the compass course.

Milne G 12787/1898 Calendar calculator

12,787. Milne, G. June 8.

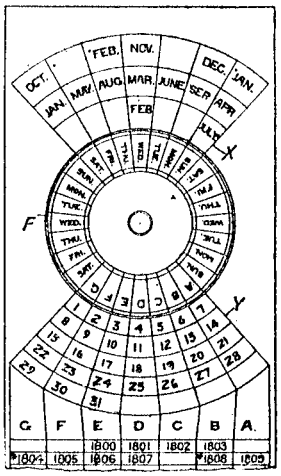

Calendars; calculating-apparatus.—The calendar is for determining upon what day of the week certain dates fall for a large number of years, say 1800 to 1999. A rotary disc F, marked radially as shown with days of the week and the seven letters A to G, is placed between radially and concentrically divided sectors X, Y on which are marked in the proper spaces the months (Jan. and Feb. being repeated with asterisks for leap years), and the days of the month. The seven letters G to A are repeated in spaces leading from the radial divisions on the sector Y to the columns of years, beginning from 1800 under E and continuing for any desired number. There is a blank space before each leap year, and such years may be distinguished by an asterisk. As an example, let it be required to find the day of the week on which June 10, 1807, fell. Since 1807 lies in column D, turn the disc F till the letter D comes under June on the sector X. Then the number 10 on the sector Y will be in the radial line of the day, Wednesday, required.

Mitchell A 8428/1905 Cheap circular adder

8428. Mitchell, A. April 20.

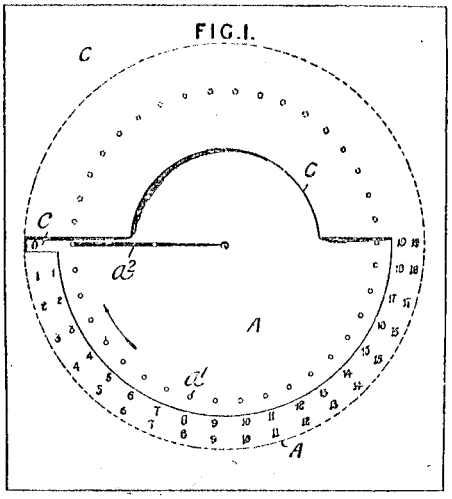

Calculating-apparatus; counting-apparatus.—A cardboard, celluloid, or like disk A is pivoted to a board and bears numbers near its edge as indicated by the dotted figures. Above it is a cover C, so shaped that one number may show through the slot *c*, and bearing upon a circular arc fixed numbers according to which the disk is turned when employed for adding numbers, the movement being effected by placing a pencil point in the proper hole a^1 and bringing it round to the slot. Each disk number has its corresponding hole. A zero line a^2 facilitates setting. In a modification linear motion replaces angular, and for the disk is substituted a numbered endless band passing over rollers.

[Reference has been directed under Patents

57

Mohlenbruck H 4010/1904 Circular slide rule for cutting wheels

4010. Möhlenbruck, H. Feb. 26, A.D. 1903, [*date applied for under Patents Act, A.D. 1901*].

Slide rules of the circular type for determining suitable combinations of change-wheels for cutting screws of various pitches upon a lathe. Of the two concentric discs *a*, *b*, the inner is graduated in angles upon its edge *h* according to the logarithms of the numbers marked thereon, which numbers represent millimetres, and has also an inner scale of concentric numbers *k*, preferably of a different colour and having radial lines to the edge of the disc, these numbers representing, logarithmically, inches and fractions thereof. For convenience, log 10 occupies an angle of 180°. Upon the outer disc at *p* are marked, according to their logarithms, the products, taken two at a time, of the numbers of teeth on the wheels of the usual set for a screw cutting lathe, running from 15 to 130 by fives, and containing eleven bastard wheels. The two factors of the product are marked, opposite the graduations, upon one of the three rings *d*, *e*, *f* and to economize space reference numbers are employed, referring to other factors and sets thereof appearing in columnar form on the inner disc at *g*. Relative angular motion of the two discs may be possible, or they may be fixed and two arms *l*, *i* provided. These arms are pivoted on the central spindle and are set on the scale *h*, one to the pitch of the leading screw and the other to the pitch of the required screw, in which position they are clamped, and moved round together until each reading edge coincides with a graduation on the scale *p*. The factors against these graduations give the numbers of teeth in the drivers and followers respectively of a suitable train. Straight slide rules may be similarly graduated and marked for the purpose.

(*For Figure see next page.*)

4010.

FIG.2.

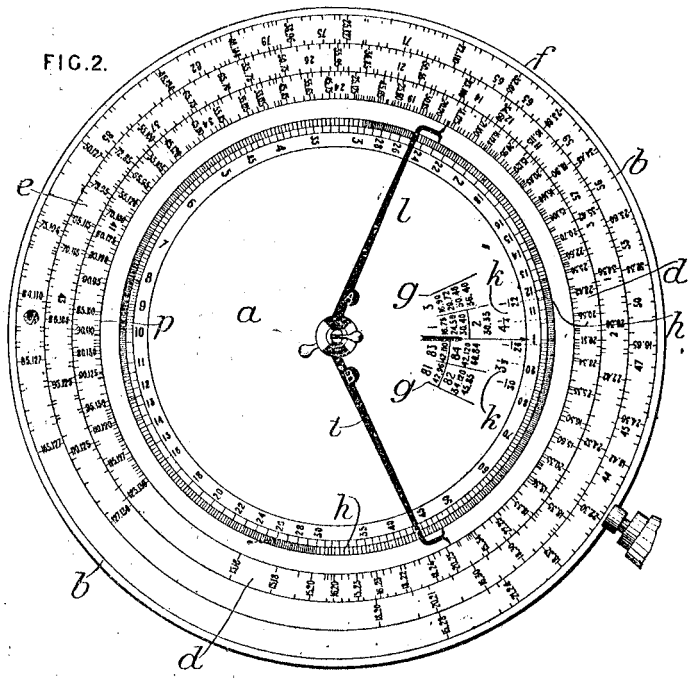

Montforts A 20507/1896 Counter adder

20,507. Monforts, A. Sept. 16.

Counting - apparatus. — Relates to machines of the class in which the numbers are formed on the edges of discs, a method of returning such discs to their normal positions being described. In each disc is a recess a^1, on whose outer edge are teeth engaged by the suitably formed end of a spring S, whose other end is fastened to the shaft on which the discs rotate.

FIG.4.

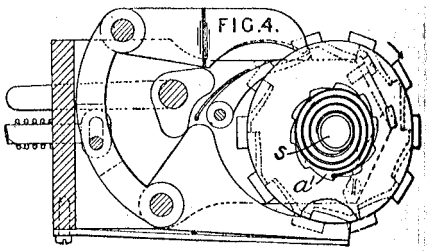

This spring is wound up as the disc rotates, and is so adjusted that, when a certain stress is reached, its outer end slips over the teeth in the recess. Stop pawls prevent the disc from overshooting its starting position when released

Montessori M 17890/1913 Abacus to teach writing numerals

17,890. Montessori, M. Aug. 5.

Abacuses.— A device for teaching the writing of numerals employs differently coloured rows of ten beads, the left hand standard of the frame being marked to indicate the unit, tens, &c. rows. The numbers represented are written upon cards ruled with lines corresponding in colour, number, and sequence with the rows of beads.

FIG. 1.

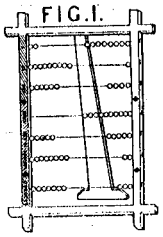

Moore F C 8217/1888 Adder

8217. Clark, A. M., [*Moore, F. C.*]. June 5.

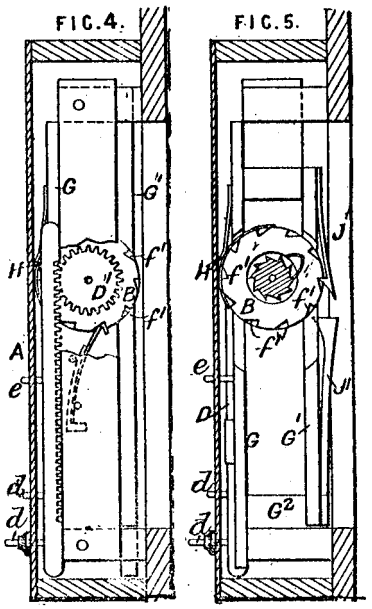

Calculating-apparatus.—Numbers are added by raising buttons *d* in graduated slots up to the required digits and then pulling them down again to the bottom. Each button is attached to a rack D gearing with a toothed wheel D^1, Fig. 4, connected, by the usual ratchet and pawl device, Fig. 5, for driving in one direction only, to a numbering-disc B. The numbers on the discs show through apertures in the front of the case, and each number has a small one placed close to it, thus :—7^3, the sum of the two being 10. By this means, when it is desired to return the apparatus to zero, all that has to be done is to add the small numbers to the large ones by moving the buttons *d*. The "carrying" mechanism consists of a series of frames G, G^2, G^1 sliding vertically, and carrying pawls J^1, J, the former being friction pawls to prevent slipping, the latter engaging notches f^1, Fig. 5, in the next numbering-wheels above. A pin projecting laterally from each numbering-wheel draws down its frame whenever the wheel passes through zero, and this is indicated to the operator by an apron H on the frame covering the number on the disc. At the same time a locking-device (not shown) stops the movement of the next rack above. Adding may still be continued on all the other racks, and the projecting pin will ultimately move back the frame and by means of the pawl J add 1 to the next numbering-wheel. Pins *e* working in slots are, however, provided on each frame so that the frame may be pushed up again at once and the ten "carried."

2

Moore J 14105/1852 Sph trig

A.D. 1852, May 1.—N° 14,105.

MOORE, JOHN. — "Improvements in nautical instruments "applicable for ascertaining and indicating the true spherical "course and distance between port and port."

"My instruments consist of two graduated brass rings or "meridians which are so connected together that they may be "set at any required angle to each other by means of the divi- "sions marked on a third ring placed equatorially to the two "meridian rings, and on which they slide. On the skeleton "globe thus constructed a fourth graduated brass ring can be "clamped in any position, being a great circle to the said "globe."

The instrument is fixed in a foot by means of a binding screw, "which fastens it as in a vice, the jaws being lined with cork or "other yielding material." An arm carries "the clamp, which "fixes the great circle in any required position; it slides through "the foot, and is fastened in any part of its course" by a screw. A "double fork" "slides in a hole perpendicular to this arm, "and is fastened" by a screw, "and thus clamps the ring in any "required position."

Methods of using this instrument for the following purposes are set forth:—Finding the angle of position or bearing; also, the areal distance between place and place; ascertaining the latitude, amplitude, variation of the compass, time, and longitude.

[Printed, 2*s.* 4*d.* Drawings. See Repertory of Arts, vol. 21 (*enlarged series*), p. 94; and Mechanics' Magazine, vol. 57, p. 414.]

Morin A M 5269/1910 Measure area of hides

5269. Morin, A. M. March 15, 1909, [*Convention date*].

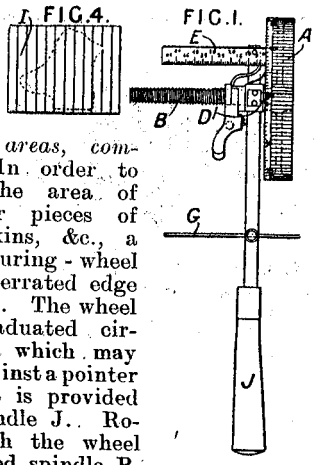

Surface areas, computing. — In order to measure the area of irregular pieces of leather, skins, &c., a hand measuring-wheel A with a serrated edge is employed. The wheel has a graduated circumference which may be read against a pointer D^1, and it is provided with a handle J. Rotating with the wheel is a screwed spindle B, adapted to register complete rotations by means of a slider engaging with the thread and reading upon the scale E, the slider being disengageable for the purpose of setting the parts to zero. At some distance below the handle a cross-bar G is arranged, whereby, with the work on a horizontal surface, the reading point D^1 remains at the top. The area is obtained by measuring the sum of the lengths of the intercepts upon a number of parallel equidistant lines made by the area in question; the work is either spread upon a suitably ruled table, or a ruled celluloid sheet I is placed thereover. In order to adapt the instrument for different systems of measures, different graduations may be employed, or sets of lines having a different common distance.

Morin Boyelle - G 108460 of 1916 Slide rule for hardness of metals

108,460. Morin, G. Boyelle-. April 25, 1916, [*Convention date*].

Slide-rules.—In connection with apparatus for ascertaining the relative hardness more especially of metals by means of the impression producible by a ball of superior hardness, it is stated that the hardness numbers on the Brinell scale are inversely proportional to the square of the diameters of the impressions made in the specimen and in a comparison piece of known hardness by the same blow. A correction may be applied for the fact that the Brinell numbers are proportional to the surfaces of the spherical impressions, and is taken account of in a slide-rule having, on the fixed part, scales h^1, h^2 for hardness numbers and resistance in kilograms per square millimetre respectively, and, upon the slide, a scale of diameters of impressions obtained upon the block of known metal.

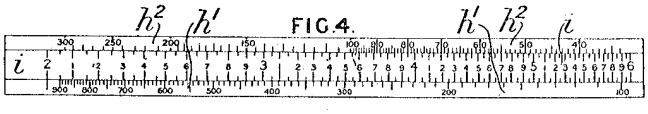

FIG. 4.

Morse H N 21893/1904 Stylus adder

21,893. Morse, H. N. Oct. 11.

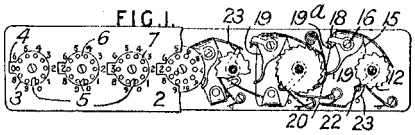

Calculating - apparatus.—In the casing 2 of an adding-machine are circular holes 3 with numbers marked round the outside, and beneath these holes dials 6, similarly marked, are mounted to turn. Oblong apertures 4 permit one number on each dial to be seen at a time. In the dials are depressions 7, and, to effect addition, a pencil-point or other device is inserted in the depression opposite the numeral on the casing which is to be added, and the dial turned until the pencil meets a stop 5. The numbers of the different dials represent respectively pence, shillings, and units, tens, hundreds, &c. of pounds. Transmission from one dial, when it is turned up to or past the zero position, to the next dial is effected by means of an intermediate plate 15, having its ends bent over and pivoted on a stud 16. A sleeve fixed to the plate surrounds the stud, and a helical spring attached to the sleeve and to an arm 18 carried by

619

the stud presses the plate towards the right. As the next dial to the right reaches the zero position, an arm 23 which it carries acts on a stud 22 on the plate 15, rocking the plate and causing a spring pawl 20 pivoted to it to engage a ratchet-wheel 12 on the next dial and rotate it by one tooth. Backward motion of the ratchet-wheel 12 is prevented by a spring pawl pivoted to the case, and when the pawl 20 engages the wheel 12, a retarding-pawl 19, forming part of, or attached to, the plate 15, presses against the same wheel. In the case of the shillings dial, however, the pawl 19 acts by means of a second pawl 19^a pivoted to the case. The ratchet-wheel on the pence dial is acted on by a retarding-pawl only. A mark is made on each dial 6 opposite the depression which must be brought next to the stop 5 in order to bring the dial to the zero position.

Moynihan E J 9409/1901 Adder for £sd

9409. Moynihan, E. J. May 7.

FIG.2.

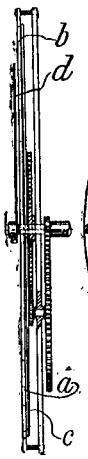

FIG.1.

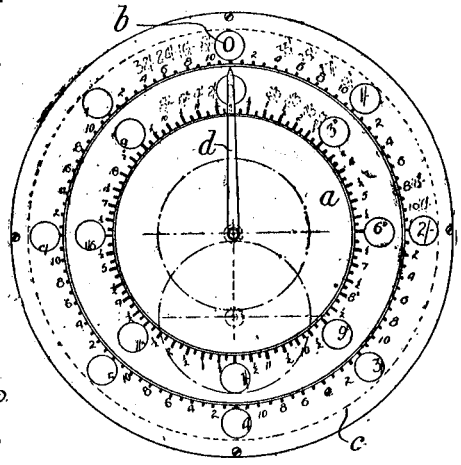

Calculating-apparatus ; counting-apparatus ; dials. —The invention is shown applied in apparatus for counting or adding up English money, but is applicable generally. A fixed dial *a*, which shows by a revolving hand *d* repetitions of graduation from a penny to a shilling between apertures *b*, is backed by a rotary dial *c*, which presents the required readings in shillings through the apertures when the hand reaches them. Inner circles of graduations of the same kind read from a halfpenny to ten shillings only.

Mudd T 10311/1888 Watch slide rule

10,311. Mudd, T. July 16.

Slide-rules.—The apparatus is arranged with circular scales, and is mounted in a watch case so as to be carried in the pocket. On one side are two logarithmic or like scales 1, 2, the latter fixed and the former movable, being preferably turned by the thumb-wheel 4 on the sleeve 5, through bevel gear 6, 7. A milled head 8 like that of a keyless watch is fixed on the spindle 9 and through bevel gear 10, 11 operates a pointer 3 by which results are recorded and time saved. At the other side of the case is a fixed dial 12, graduated logarithmically and provided with index hands 17, 19; the latter is driven by bevel gear 10, 18 from the spindle 9; the former can be driven twice or three times as fast as required by throwing the wheels 13, 15, which slide on the spindle 9 but always turn with it, into gear with the wheels 14, 16 by means of clutches. In this way squares, cubes, and the corresponding roots may be determined. The details may be varied, and additional gear provided for determining other powers and roots.

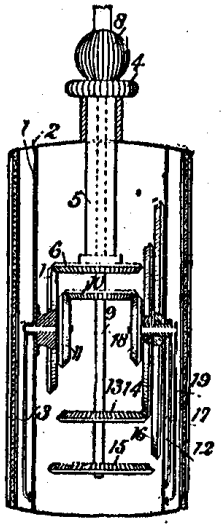

Mugnier F 12021/1904 ASMD

12,021. Mugnier, F. May 30, A.D. 1903, [*date applied for under Patents Act, A.D. 1901*].

Calculating-apparatus.—Relates to a calculating-machine for effecting the four fundamental operations of arithmetic. Two horizontal parallel shafts *a*, *b*, Fig. 1, are mounted in the casing *s*, and upon the power shaft *a* are mounted a series of gear-wheels *r* having ten teeth, one of which is larger than the rest. They rotate independently on the shaft but can be made to rotate with the shaft by sliding clutch sleeves *n*. The latter are driven by the shaft by screw pins *t*, Figs. 1 and 2, and carry small pins *u* which engage one of a series of ten holes in the gear-wheels *r* when moved by means of the lever *f*. The teeth of the gear-wheels carry the ten numerals, which appear successively opposite windows in the casing *e*. The

FIG.3.

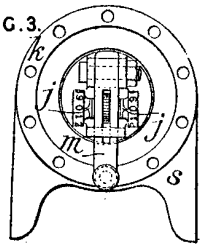

shaft *a* is rotated by the handle *m*, and the bevel-pinion *p* at the other end of the shaft operates another similar pinion *l* carrying a circular plate *g*, upon which are two concentric rows of the ten numerals arranged in opposite order. The support *h* is inscribed with the first ten letters of the alphabet. The handle *m* carries a stud which engages one of a series of holes in the fixed crown plate *k*, Fig. 3, and, each time the handle is oscillated in performing an arithmetical operation, the ratchet-wheel *q* mounted on the crank of the handle *m* causes the intermittent rotation of two rollers, the figures on which stop successively opposite the index *j* and indicate the number of times the handle *m* has been turned when performing the operation of multiplication. The shaft *b* also carries a set of cylindrical wheels *z*, each with ten teeth and operated by the long tooth on each wheel *r* so as to transmit the amplitude of the tenth of a revolution to the adjacent wheel mounted on the shaft *a*, the latter then registering the tens which the preceding wheel cannot register. Springs *x* keep the wheels *z* in position, bearing against the lower noses of the engaging levers *f*, and also serve to return these levers to a disengaged position. To perform an addition of numbers, the wheels are all set to zero and the first of the gear-wheels *r* engaged by the first lever *f*; the crank *m* is then rotated in the positive direction through successive angles corresponding to the unit figure of each number to be added. The second gear-wheel *r* is then brought into

FIG.1.

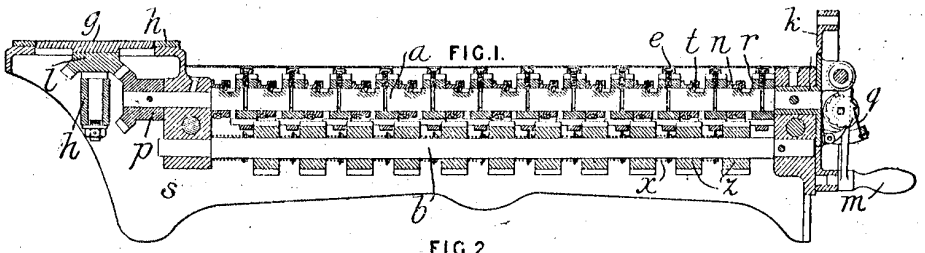

FIG.2.

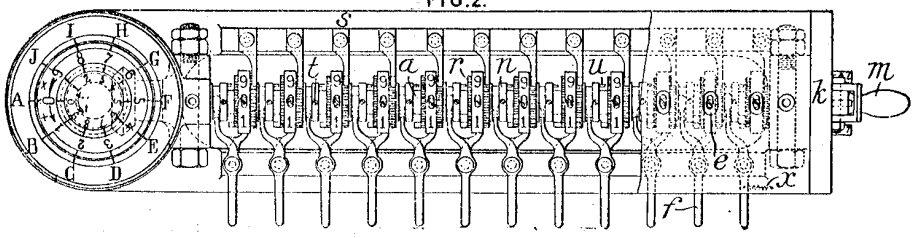

action and the same operation repeated for the ten's figures of the numbers, and so on. The final result always appears through the openings opposite the gear-wheels in the casing, and the operations for subtraction, multiplication, and division are very similar.

Muirhead & Edgar 13199/1900 Location by X-Rays

13,199. Muirhead, F. L., and **Edgar, R. H.** July 21.

Calculating-apparatus.—In locating the position of a foreign body by means of Röntgen rays, the vacuum tube is adjustably mounted on a slide having scales to denote the movement to the right or left of the zero position. Above this is a skin window on which the object to be examined rests. Above the object, and in proximity with it, is a graduated frame, in which slides a fluorescent screen. When the tube and the screen are at the zero of their respective scales, a central transverse line in the screen and the point of maximum effect in the tube will be in the same vertical plane. The tube and screen are then moved to the right or left, both the same distance, until the shadow of the foreign body falls on the central line of the screen. Then the tube alone is moved, until the shadow falls on one of two lines parallel with and equidistant from the central line on the screen. The tube is next moved in the opposite direction, until the shadow falls on the other line. The point of intersection of the lines drawn on a vertical plane from the extreme positions of the tube to the lines on the screen on which the corresponding shadows are cast, will represent the location of the foreign body, and its distance from the screen, and thus its depth in the object can be readily calculated by means of a graphic representation or otherwise. Fig. 7 shows a device for this purpose, in which the points 15, 16, at which the legs 25, 26 are pivoted, represent the two equidistant lines on the screen, the edges of the legs representing the lines drawn on a vertical plane, as stated. By means of suitable scales at the back of the legs, as shown, the distance of the point of intersection, 27, from the screen can be read off.

FIG. 7.

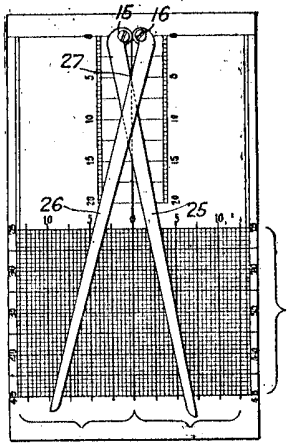

Muller A 14330/1903 M D

14,330. Müller, A. June 27.

Calculating-apparatus.—In calculating-apparatus, applicable to multiplication and division, of known type, having counting, registering, and numbering discs, the adjusted figures of the multiplier or divisor appear through suitable apertures, the carrying forward on the registering-discs is effected directly by the counting-discs, the number discs operate in either direction, and the registering-discs can be independently set. Fig. 1 is a front elevation, and Fig. 2 a side view of the machine, in which the nine large counting-discs *a* on the spindle *w* each carry nine counting-pins *h* for moving the registering-mechanism *k* when the spindle is rotated. Some or all of these pins can be pushed radially in and rendered inoperative by means of movable numerator rings *g*, according to the number set, the said number being simultaneously shown through a window in the cover *t*. Each disc carries two lateral engaging pins *b*, b^1, the pins upon adjacent discs being at equal angular distances apart, as shown in Fig. 2. When a registering-disc *k* has made a complete revolution, the proper pin *b*, b^1, according to the direction of motion of the spindle *w*, moves the next disc through one unit. Upon the spindle *w* are also keyed segmental pieces *m* with similar lateral engaging pins *d*, d^1, which effect the carrying on for those registering-discs without corresponding counting-discs. By means of the lever *p*, and wheels *r*, each revolution of the spindle *w* causes a change of indication of one unit on the number discs *n*, the change being thus automatically given

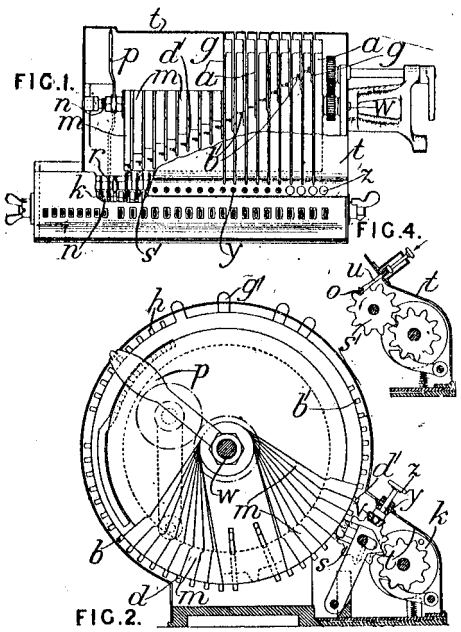

its proper sign. Two devices are described for independently setting a dividend upon the registering-discs. In one, Fig. 2, a small hand-wheel *z* is mounted on the same spindle *y* as a bevel pinion *v*, which can rotate the disc *k* by means of a spur-wheel. In the other, Fig. 4, a spring plunger *u*, with terminal pawl *o*, is used to rotate the wheel S^1.

© B O B Williams Printed22/11/2023 CalcPatents Ed. 1.doc

Muller A & Zeising O 3135/1904 Arithmometer

3135. Müller, A., and **Zeising, O.** Feb. 8.

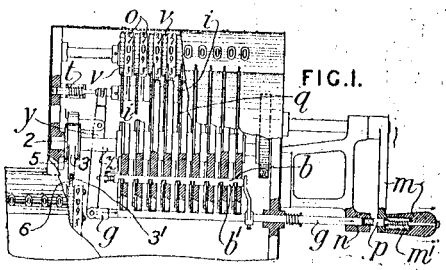

Calculating-apparatus.—In a machine of the general arithmometer type having setting-rings, such rings are locked when the operating-handle is not in its position of rest, the number set on the rings is displayed on indicators in a line, and the registering-discs are so operated that they do not over-run. The handle *m* is shown in the position of rest, with its bolt *p* forced by the spring m^1 into the recess *n* of the frame, pressing in the rod *g* and thereby throwing locking-projections b^1 on the bar *b* out of gear with teeth on the setting-rings, and also keeping the lever *y* displaced against the spring *t*, so that wheels *i* may be in gear with wheels *q* on the setting-rings and other wheels *v* on the indicators *o*, which are thus moved as the rings are set. The eccentric-rod 3 of an eccentric 2 on the main shaft *z* has a slot through which a fixed pin 5 passes, and the motion of the extremity 3^1 of the rod thus obtained is utilized to drive intermittently gear-wheels 6 which actuate the registering train.

Muller W 5674/1828 Teaching astronomy etc

A.D. 1828, July 10.—N° 5674.

MULLER, WILLIAM.—"An instrument or apparatus for the "purpose of teaching or instructing in mathematical geography, "astronomy, and other sciences for the use of resolving problems "in navigation, spherics, and other sciences."

This instrument is called a "cosmo-sphere," and it represents "the universe or parts of it;" by it, "or its appertaining parts, "lines, distances, positions, and angles may be traced or com- "puted," and certain problems solved.

The invention consists of:—"The representation of a terres- "trial globe within a transparent globe," the transparent globe being suspended in a certain manner. "The cosmospherical "representation of an orrery or planetarium, of a tellerium, of a "lunarium, and of a terrestrial and celestial globe," the whole of these being suspended in a certain manner. An apparatus called "the tube of the axis of altitude with the appertaining parts." "The representation of a transparent horizon and of a trans- "parent dial plate." "The making of a terrestrial or cellestial "globes of glass paper on a skeleton or under a skeleton." "A "spherometer." "A loxodromograph." "The representation "of the orbits of the moon or planets on glass paper, stuck to a "globe or ball."

On the transparent globe used in connection with the terrestrial globe, the stars, as well as the equator and other astronomical lines are represented; the said transparent globe may be composed of two or more hemispheres of glass, and is "suspended" to the "general meridian" by means of certain screwed rings. The same or a similar method of "suspension" is used for orreries, planetaria, and other similar instruments.

An "orbograph" is described, and other instruments and details are set forth in this Specification.

[Printed, 8*d*. Drawing. See London Journal (*Newton's*), vol. 2 (*second series*), p. 281; and Register of Arts and Sciences, vol. 3 (*new series*), p. 193.]

Muntz W E 9227/1902 English to metric

9227. Muntz, W. E. April 21.

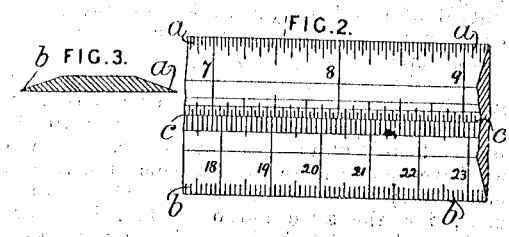

Measures of length; calculating-apparatus.—Accurate comparison at sight between English and metrical measures *a*, *b* on a scale is facilitated

Muschke A 18388/1907 Directional photo exposure

18,388. Muschke, A. Aug. 14.

Calculating apparatus.—A device similar to an exposure meter indicates the direction in which to photograph at any particular hour of the day in any weather, or alternatively the proper time to photograph from any particular standpoint. The instrument can also be used as a sundial. The base *a* carries a compass, and is circularly graduated as shown. The lower disk *b* is graduated in a manner analogous to a sundial, being divided into five hour divisions corresponding to five different solar positions. The upper disk *a* is slotted at *b* to indicate the hour for any particular month on the disk *b*. To get the direction to photograph at any time, the disk *b* is set N and S, and the disk *c* then rotated to expose the hour according to the particular month. The arrows on the disk indicate the required direction. For angular illumination the disk *b* is first set as required. To get the correct hour to

FIG.1.

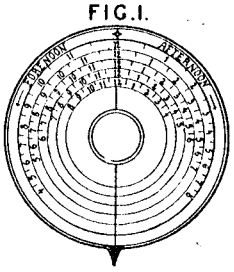

FIG.2.

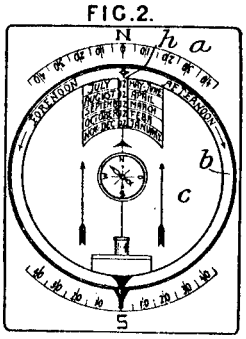

photograph, the base *a* is set N and S, the disk *b* is turned according to the lighting angle and the disk *c* turned towards the object, the hour showing on the disk *b* giving the required time. The apparatus can be used as a sundial by inserting a vertical rod in the centre, and turning the disk *c* until the shadow is along the cut *h*.

Myers D 9068/1897 Computing spring balance

9068. Junge, C., [*Myers, D.*]. April 9.

Value-indicating apparatus; spring balances.—The value scales are printed in concentric columns $a^1 \ldots a^8$, the values at even and odd rates being printed in different colours and running round the dial in opposite directions so as to be read right way up in the slots c, c^1 respectively. These slots are graduated with the rate scales. The outermost column a shows weights. The dial, which is of paper, cloth, celluloid, &c., is fixed to a frame consisting of a central hub connected to an annular ring, flanged on its inner edge, by corrugated spokes. The hub may be strengthened by a flanged disc. To keep the dial stretched and so prevent puckering, the ends of springs H, soldered in the

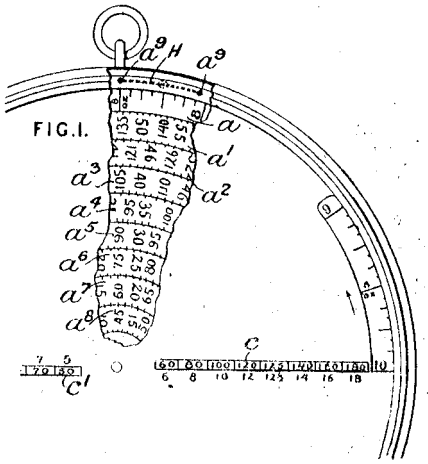

middle to the frame, are bent outwards, and pass freely through holes in the frame and then into eyeleted holes a^9 in the dial. These holes being placed nearer the centre than the centre of the springs, an outward pull is exerted upon the periphery of the dial.

Nahlik G 26800/1906 Adder

26,800. Nahlik, G. Nov. 26.

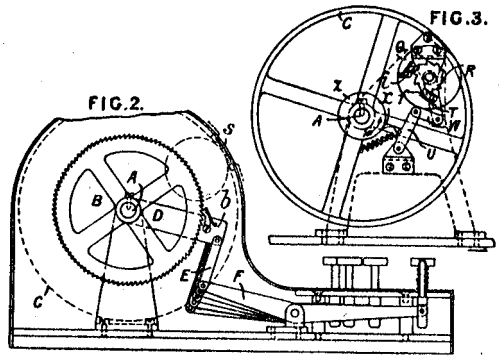

Calculating-apparatus; counting-apparatus.—In a single-bank key-set and key-operated adding-machine, five keys and corresponding ratchet-wheels are provided, the latter being fixed on the shaft of a single numeral-wheel the revolutions of which are counted by an auxiliary numeral-wheel. Near each of the above-mentioned ratchet-wheels B, Fig. 2, a lever D is loosely mounted on the shaft A. Pawls *b* on the levers D turn the ratchet-wheels B and numeral-wheel C when the levers D are actuated by key-levers F through links E. If a number greater than 5 is to be added, two keys are depressed successively. On the completion of each revolution of the wheel C, which is numbered from 0 to 99, a tooth *x*, Fig. 3, on a disk *z* fixed to the shaft A actuates a spring-controlled lever U which, through a link W, lever T, and pawl *f*, turns a ratchet-wheel R through one-tenth of a revolution. On the shaft of the ratchet-wheel R is fixed the hundreds-wheel Q. A detent *i* is provided. The result of an addition is read from the numeral-wheels Q, C through an aperture *s* in the case. Knobs are provided on the ends of the axles of the numeral-wheels for turning them to zero.

Naish R 12347/1897 Instrument for percentages

12,347. Naish, R. May 19.

Calculating-apparatus.—Relates to an instrument, used in conjunction with a scale, for mechanically determining percentages and other numerical results. The scale shown in Fig. 1

ontains a number, preferably 20, of parallel and quidistant lines graduated in sequence from left o right to represent numbers ranging from 100 o 1,000, the terminal zero in each case being

FIG. 1.

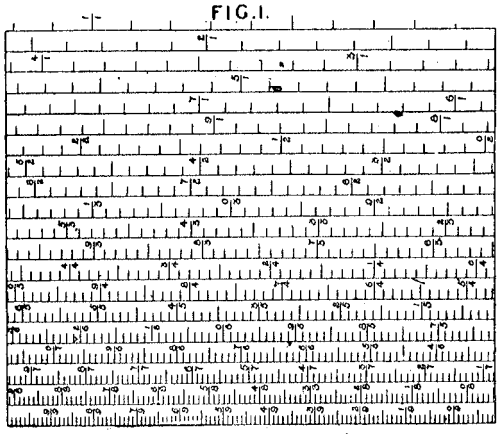

FIG. 3.

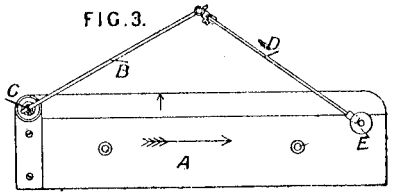

omitted. These numbers are separated from each other by graduated linear spaces proportional to the mantissae of their logarithmo. The instrument used with the scale is shown in plan view in Fig. 3. It consists of a rectangular frame A with a bevelled edge having a transverse arrow, which locates the position of the "polar point," and has a swivel C carrying a horizontal rod B, which is jointed to the rod D carrying the "vectorial "point" E. The first and last points of the scale are called "power points." Suppose it is required to find the percentage which 684 bears to 952. The frame A is applied to the scale so that the bevelled edge lies along the line containing 952, and the "polar point" is applied to coincide with that numeral. With the instrument in this position, the point E is applied to 684, after which it is lifted and re-applied so that the "polar point" coincides with a "power point." The point E now indicates 718, the digits of the required result 71·8. A number of single scales, each constructed like the one described, may be formed into a "combined scale." Subsidiary points and graduations are added to the "combined scale" and instrument when evolution, involution, and other processes are to be performed.

National Addograph Co 9811/1900 Type writing computing machine

9811. Boult, A. J., [*National Addograph Co.*]. May 28.

Calculating-apparatus.—Relates to a combined type-writing and computing machine, which, while performing all the usual functions of a type-writer, is capable of adding a column of figures written by the type-writer. The construction is such that marks or characters, such as a comma separating hundreds from thousands, can be interspersed between the numerals without interfering with the computation. Fig. 1 is a sectional side elevation of the machine, and Fig. 2 a plan of the computing-mechanism. The type-writer is of well-known construction, comprising a carriage B, inking-ribbon Q, pivoted feed-rack b^3, escapement E, universal bar E^1, operating-levers C, type-bars D, and keys F. The computing-mechanism consists of a series of wheels G^1 . . . . G^8, Figs. 2 and 9, connected by wheels H^1 . . . . H^7 and pawls h^1, so that, when a wheel such as G^7 is turned through 10 units, it adds 1 to the reading of the next wheel on the left. The figures recorded on the wheels G are read through windows K. Sliding upon fixed transverse rods N at the base of the machine is a narrow frame M, termed the "computor carriage." At the rear of this carriage is pivoted a lever O terminating in a toothed sector o^1 and normally held upwards by a spring o^2. Above the lever o are a series of ten bails S . . . . S^9,

© B O B Williams Printed22/11/2023 CalcPatents Ed. 1.doc

pivoted to the side bars R and nesting together in the manner shown in Fig. 2. The bails consist o tubes S carried by arms s^1. In addition to the usual keys F, the keyboard is fitted with ten numer keys F^1, to be used exclusively for printing numerals in the column of figures to be added. The stems of these keys fork over operating-levers C for the type-bars, and extend downwards so as to act directl

FIG.1.

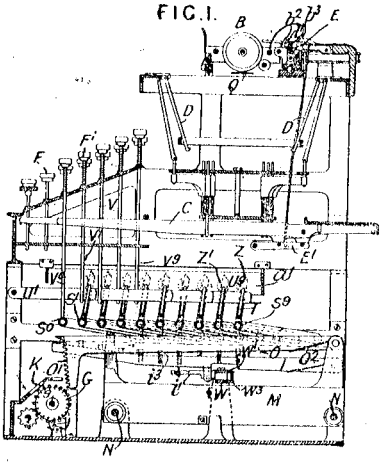

FIG.2.

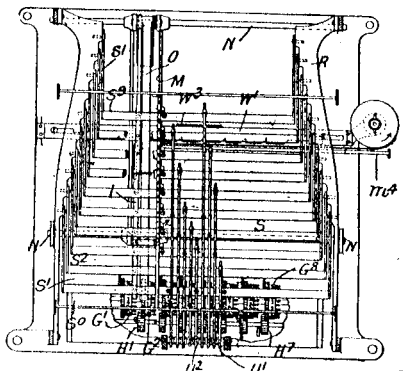

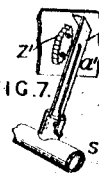

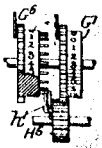

FIG.5.

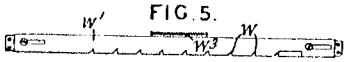

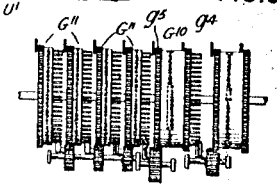

upon the bails, as in the case of the stem V^0, or through the medium of levers U and links T. The extent to which the lever O is depressed depends on the bail brought into action. If the bail S^9 is depressed the sector O^1 will turn the wheel G through nine teeth, whereas the bail S^1 will only rotate it through a single tooth, and the bail S^0 will not depress the lever O sufficiently to rotate the wheel G at all. The wheels G are provided with detent pawls J which prevent backward rotation; the sector O^1 is therefore unable to rise after depression. The computor carriage M is, however, under the control of an escapement, which permits it to move to the right each time a key F^1 is depressed, and during this movement the sector O^1 escapes from the teeth of the wheel G, rises under the influence of the spring O^2, and finally comes to rest vertically above the next wheel G to the right of that just actuated, the computor-wheels being thus rotated through the proper amounts in turn from left to right. The computor-carriage escapement consists of a pair of transverse bars W, W^1, Figs. 1 and 5, having on their front edges notches w, the distance of which apart is that of two consecutive wheels G. The lower bar W is fixed; the upper one is capable of a limited right-hand movement against the tension of a spring w^3. A lever I, pivoted at the rear of the computor-carriage, bears an escapement pawl i^1 normally in engagement with the upper bar W^1. Pins i^3 on the bar I project into the path of the bails S (including the bail S^0), so that the depression of any of the keys F^1 will engage the pawl i^1 with a notch in the lower bar W. The spring w^3 moves the bar W^1 to the left, the pawl w^1 engaging with the next notch when the lever I rises. The main driving-spring of the carriage M then opposes the spring w^3 and draws the carriage one step to the right. A blank key is provided, which operates both the computor and type-writer escapements without printing any character on the paper. When the computor carriage is moved to the extreme right, its levers will be operated idly, and the type-writer can be used in the usual way. The carriage is returned to the left-hand computor-wheel by means of a rod m^4. Fig. 2. To ensure that the lever O shall always be properly depressed, each bail carries a ratchet-pawl Z, Fig. 7, which moves round a stationary elliptical ratchet-block Z^1, carried by the plate a^1 of the frame. A pin b^3 is provided on the rack-bar of the type-writer carriage, which, when the bar is tilted to release the escapement, moves into the path of a fixed stop l^1 and thus enables the carriage to be rapidly brought back to the column alignment. Fig. 12 shows a series of computing-wheels adapted for adding English money. The wheels G^{11} for the pounds column are of the ordinary decimal type. The wheel G^{10} for the shillings column is provided with numbers from 1 to 20, which is represented by 00. It bears two series of teeth g^5, g^4, which are acted upon in turn by the sector O^1. Devices are provided by which, if the numeral key denominated 1 is depressed while the sector O^1 is over the teeth g^5, the wheel G^{10} will be turned through ten spaces instead of one. If, however, the same key is depressed when the sector is over the teeth g^4, the wheel will only turn through one space. Thus, in printing the numeral 11 in the shillings column, the printing of the first 1 registers ten shillings and the printing of the second brings the register to eleven. The wheel for the pence column is operated in a like manner.

© B O B Williams Printed22/11/2023 CalcPatents Ed. 1.doc

NCR 9369/1890 Cash register

9369. Haddan, H. J., [*National Cash Register Co.*]. June 17.

Receipts, checking and recording.—Relates to cash registers. Keys D raise tablet rods F, and, with dogs *k*, advance registering-wheels Q. The tablet rods F are supported, till others are raised, on a spring rocking shelf G. The movements of the shelf sound a gong and unlatch a money drawer C. The keys lift a heavy yoke J, K, which depresses them again when released. The front bar K of the yoke has a web *l* which engages in slots *m* in all the keys actuated, so that they move as one piece. To ensure complete action of the keys, the side bars J of the yoke have toothed arcs T, with which hanging check pawls U engage till tripped by pins *q* and caught by gravity detents V. On the fall of the yoke the detents are put back. Hanging pawls Z on the yoke engage fixed lugs d^1, and prevent a second operation of the keys until the money drawer is pushed right home, when it trips off the pawl through the medium of bell cranks B^1, A^1. Untouched keys are locked by a shaft W, which is slightly turned through linkage from the yoke T.

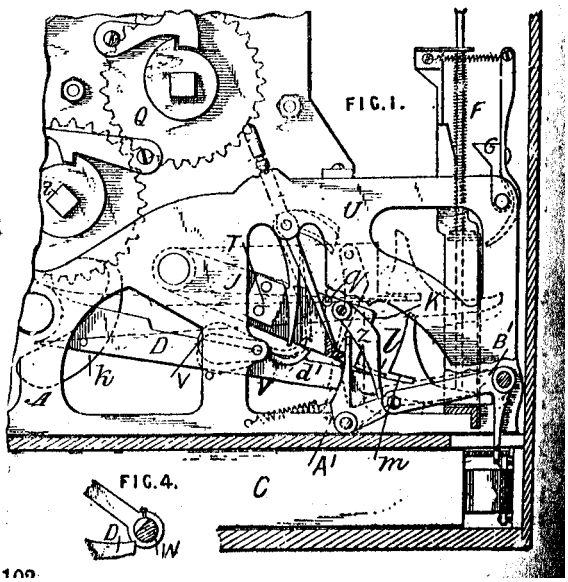

NCR 15270/1907 Price computing apparatus

15,270. National Cash Register Co., [*National Cash Register Co.*]. July 2.

Receipts, checking and recording; calculating-apparatus.—A lever-set lever-operated cash-register is provided with a product-computing apparatus for ascertaining the cost of articles at various rates per unit weight, length, or the like; there is a special set of rate keys for setting the one factor of the product, the other being set in the case of a weight by an attached weighing-apparatus, and in the case of any other quantity by a hand setting-mechanism. The cash-register is of the type described in Specification No. 21,213, A.D. 1903, and, as shown in Fig. 6, has setting-levers 11 adapted to set indicators 25, counter-actuating racks 15, and a special set of clerk's item-indicators 23, the mechanism being subsequently operated by a handle geared to the main operating-gear 85, Fig. 5. The weighing-pan 41, Fig. 3, is balanced by a pendulum weight, and is connected to a shaft 50[a] through a spring and lost-motion arrangement 50, 48 which takes up

550

back-lash ; upon this shaft are the stepped computing-disks 51, which in various combinations represent by their radial dimensions the products of weights up to 25 lb. by rates up to 50 cents,

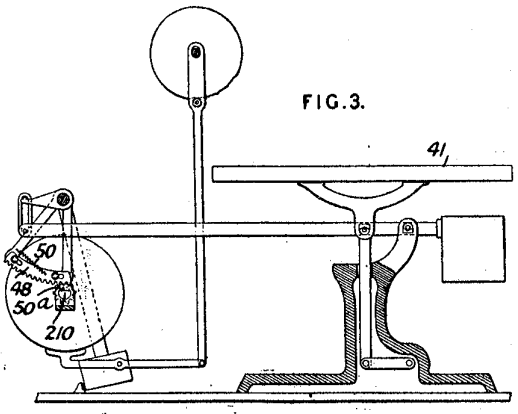

FIG.3.

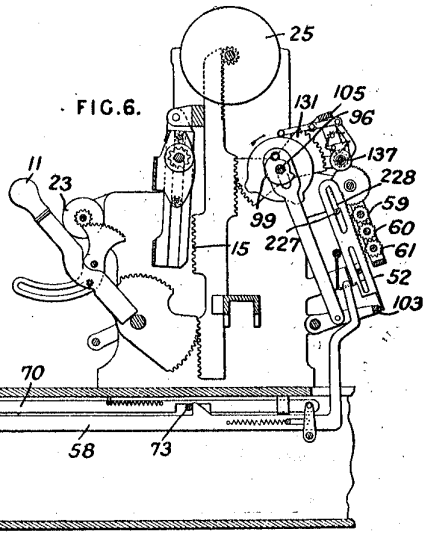

FIG.6.

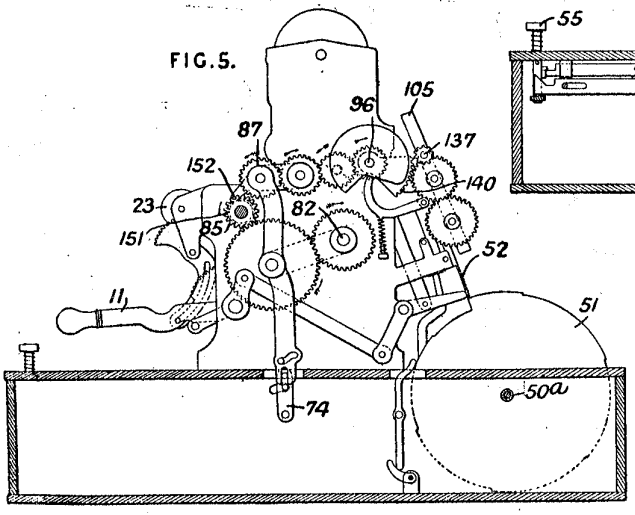

FIG.5.

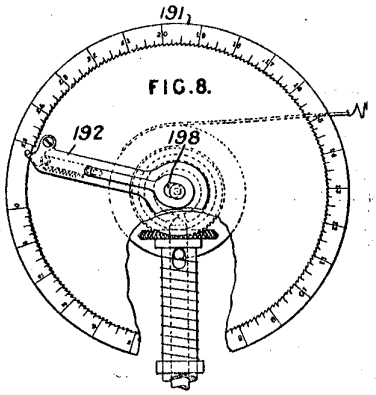

FIG.8.

for which purpose the rate keys 55 are arranged in groups of five tens' keys, nine units' keys, and three fractional keys ; in addition to an interlocking bar, which when operated is held by forward movement of the bar 70, these keys operate bars 58 and thereby allow the corresponding controlling-bars 52 to descend until arrested by their previously positioned disks, each disk having its own controlling-bar. The forward movement of any bar 58 carries with it a pin 73 on the lever 74 and simultaneously by the mechanism shown brings the gear-wheel 87 into engagement with the main operating-gear 85, thereby connecting the computing operating-shaft 96 to the handle, which, as it is rotated, successively restores the controlling-bars belonging to the three banks in descending order by means of cams 99 and yokes 103. The pivoted counter frame 105, upon which are mounted the receiving-pinions 59, 60, 61 for the three denominations and also others for the dollars, is meanwhile so positioned by a cam on shaft 96 that these pinions are always in engagement with the racks upon the controlling-bars during the return of the latter, but immediately afterwards move out of engagement to allow the transfers to be effected, of which there are in some cases two at a time. During the return of the controlling-bars, associated link-work re-sets any of the levers 11 that are not at zero, and withdraws the bars 70 to release the keys ; but the return of the lever 74 is prevented by means of a flange and pin 151, 152 until the main operating-gear 85 has performed a complete revolution. Before this happens, the main counter shaft 137 is slid longitudinally to bring longitudinal and radial zeroizing pins into engagement, and the counter frame is rocked to bring a pinion on the counter shaft into gear with a segment 140 on the shaft 96 and thereby return all the numeral wheels to zero. As their pinions

© B O B Williams Printed22/11/2023 CalcPatents Ed. 1.doc

NCR 14052/1914 Adder printer

14,052. Haddan, R., [*National Cash Register Co.*]. June 10.

Adding machines with several totalizers and with printing mechanism.—A multiple-bank key-set motor-operated machine with differential mechanism of the type described in Specification 6428/09 has a number of totalizers selectively operated by intermediate actuators. These actuators comprise broad pinions which are axially movable, and the corresponding denominations of the totalizers are arranged side by side and are selectively engaged by pinions secured to the broad pinions. Record-strips are moved in phase with the selected

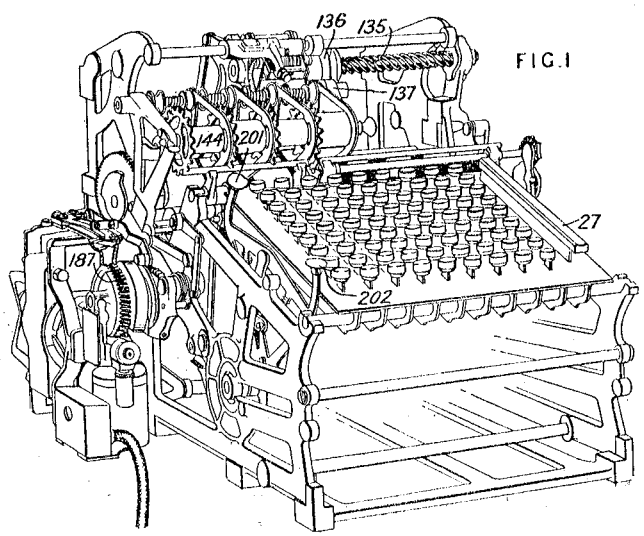

FIG. 1

573

NCR 7029/1915 Cash register

7029. National Cash Register Co., [*National Cash Register Co.*]. *May 29, 1914.*

Cash registers with operating-means; printing totals; slides for special transactions; interlocking; zeroizing - mechanism. — The slide - set handle-operated machine described in Specification 13,269/14 is provided with a zeroizing - key which, when applied to the shaft of the totalizing-counter and rotated, causes a zeroizing of the numeral-wheels while the receiving-pinions are in gear with the manual - setting and actuating rack-bars, thus setting the total upon the type-bars for subsequent printing by operation of the main handle. Rotation of the total-taking shaft 191, Fig. 7, raises the totalizer-carrying arms 162, by means of cam and pin parts, and rotates through mutilated gears a hub 200^a, Fig. 6, slotted to take the corresponding end 203 of the totalizing-counter spindle 160. Forked arms, also rocked by the total-taking shaft, previously shift a spline 204 radially outwards in the totalizer spindle, whereby the projections 13^e upon the numeral-wheels are picked up as they are met by the spline, and the corresponding values communicated to the printing rack-bars; reverse of the slide-restoring bar 300 being utilized to determine the lock.

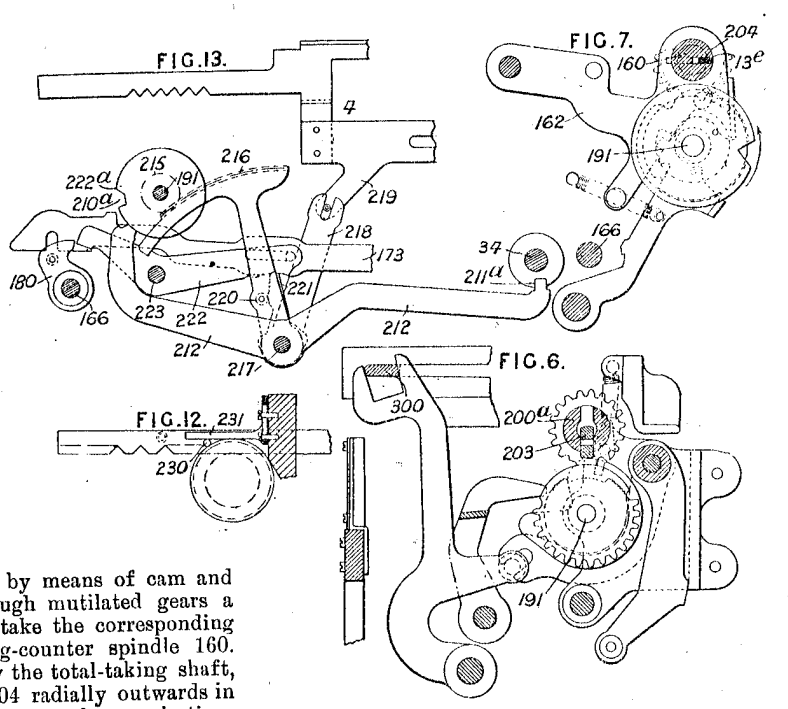

191, Fig. 7, raises the totalizer-carrying arms 162, by means of cam and pin parts, and rotates through mutilated gears a hub 200[a], Fig. 6, slotted to take the corresponding end 203 of the totalizing-counter spindle 160. Forked arms, also rocked by the total-taking shaft, previously shift a spline 204 radially outwards in the totalizer spindle, whereby the projections 13[e] upon the numeral-wheels are picked up as they are met by the spline, and the corresponding values communicated to the printing rack-bars; reverse movement of the total-taking shaft thereupon disengages the totalizer from the rack-bars. Fig. 13 shows the gearing 215 . . 221 whereby rotation of the total-taking shaft 191 sets the transaction slide-bar to print the total-distinguishing mark, and also the interlocking-lever 212 and recesses 210[a], 211[a] preventing simultaneous movement of the total-taking shaft and the main operation shaft 34. The usual totalizer-engaging function of a cam upon a shaft 166 during the return of the rack-bars is prevented by the movement of the transaction slide 4 to position the total-distinguishing mark, an arm 221 associated therewith raising an arm 222 of a lever mounted upon a shaft 223, whereby a link 173 communicating movement from the main shaft is disconnected from the engaging shaft 166, the opposite end 222[a] of the lever at the same time locking an arm 180 of the engaging shaft. The transaction slide cannot, however, be set manually at the total position, since a pin 230, Fig. 12, thereon abuts against a stop 231, which is raised to the permissive position shown by the upward movement of the totalizer. Provision is also made for the rotation of the total-taking shaft 191 to raise, upon displacement, a cross-bar (not shown) close beneath the spring detents assigned to the rack-bars, thus locking the slides against manual displacement during the total operation; the lock is removed by the subsequent operation of the main handle. A further locking-mechanism prevents movement of the total-taking shaft when any of the slide rack-bars are displaced, the consequent movement

63

National Computing Scale Co 10622/1900 Computing Scale

10,622. Weighing-apparatus. BOULT, A. J., 111, Hatton Garden, London.—(*National Computing Scale Co.; Room 48, Mercantile Bank Building, North-East corner of Superior and Bank Streets, Cleveland, Ohio, U.S.A.*) June 11.

Value-indicating apparatus as applied to an equi-armed balance is shown in front elevation and cross-section in Figs. 1 and 4 respectively. The compound beam A carries cross-bars H, to which are secured longitudinal bars J, L, the former carrying the computing-case E and the latter acting as a counterbalance. The computing-chart may be cylindrical, or it may consist of an endless web G encircling the rollers M and marked with series of value-indicating figures. A load placed on the pan F is balanced by a poise N, which slides on the graduated bar J and indicates a through slot *e* in the computing-case the corresponding value at the rate per lb. indicated by the figures g^4. When the load is more than that indicated on the bar J, a counterweight is placed on the weight pan D. The pan D rests on links pivoted to brackets c^1, and is supported by a spring S or corresponding device so that a definite vertical movement is given to the pan when any particular counterweight is placed on it. The movement of the pan is transmitted by a crank arm r^3 and link r^4 to the computing-chart, so that the corresponding series of figures is automatically brought opposite the slot *e*.

FIG. 1.

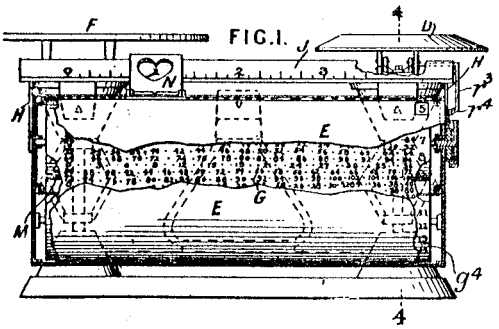

FIG. 4.

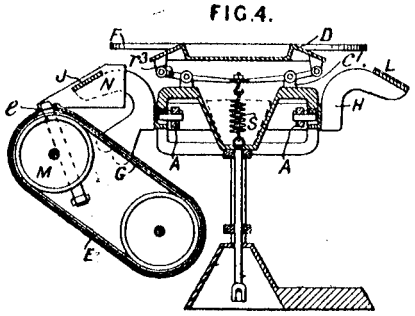

Naville R L 7472/1905 Ready reckoner bridge scorer

7472. Naville, R. L. April 8.

FIG. 2.

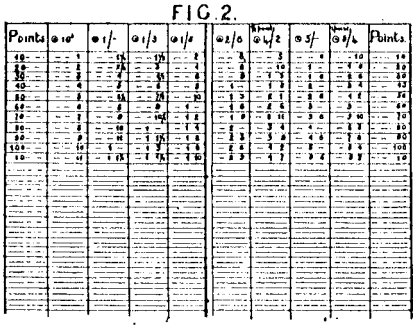

Calculating-apparatus. — A ready-reckoner for use in the games of "bridge" &c. is arranged as shown in Fig. 2, and is preferably combined with a scoring-block.

Negretti & Zambra 1558/1912 Spherical trig device

1558. Tsukalas, P., Negretti, H. P. J., Negretti, H. N., Negretti, P. E., and **Zambra, M. W.** Jan. 19.

FIG. 2.

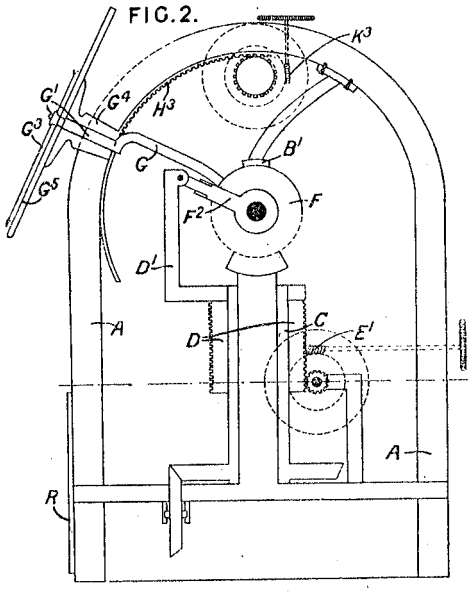

Spherical-trigonometry calculators. — Means are provided for giving the azimuth of a celestial body continuously as the time changes. A brass frame A carries in a slot a socket G^4 attached to a graduated disk G^5 representing the observer's horizon. An attached toothed arc H^3 enables it to be adjusted for latitude by means of pinion and worm gear K^3. The observer's vertical G^1, carrying an azimuth pointer G^3, is attached by a bent arm G to a sphere F moving between caps B^1. Concentrically pivoted in the sphere is a telescopic rod F^2, representing the radius vector of the heavenly body, which works in a slot in the sphere and is driven by an arm D^1 attached to a sleeve D splined on a sleeve C driven by a sidereal-time clock. The arm D^1 is movable to adjust the radius vector for declination of the body by worm gearing E^1 and a pinion engaging grooves in the sleeve D. A dial R shows the time, and can be adjusted relatively to the clock when necessary. The clockwork may be omitted and the apparatus worked by hand.

Nelson J 20681/1890 Adding Sterling, 3 circles

20,681. Nelson, J. Dec. 18.

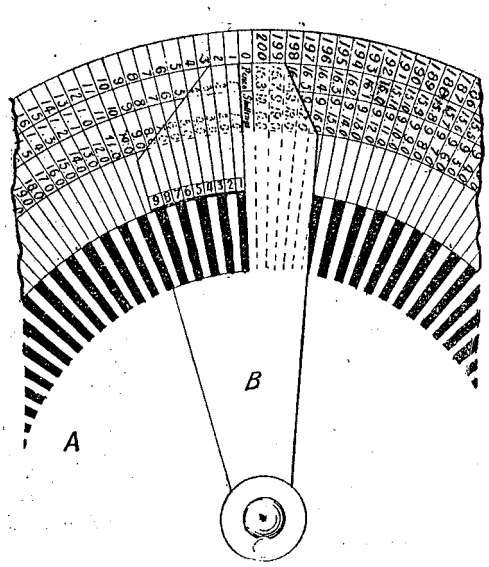

Calculating-apparatus.—Consists of an appliance for adding figures &c. A disc A shows, in three concentric circles, ordinal numbers, the values of corresponding pence and shillings, and rings of black and white rays. An index B has a radial reading-slot and a lateral circular slot embracing nine of the rays which are numbered along the edge of the slot. A style is placed on the ray having the number to be added, and the index is pushed up to it.

Newton A V as agent 1236/1855 Calculating apparatus circular adder

1236. Newton, A. V., [a communication]. May 30.

Calculating-apparatus.—Relates to an adding-machine consisting of two fixed outer scales, in a casing A marked in opposite directions with figures from 1 to 99. An inner revoluble wheel B has 100 grooved subdivisions on its periphery and an index *p* which points to the numbers on the outer scale. A ratchet-wheel D with 100 teeth is advanced one tooth by the pawl F when a stud *g* on the wheel B strikes the end of the lever *y*. An index E on the wheel D, and also the index *p* are set to zero on the scales before starting. A point is inserted in one of the grooves on the wheel B opposite the first number to be added, and this wheel is turned round till the point is arrested at zero by the stop J. The following numbers are added on in the same way. The number of complete revolutions of the wheel B are recorded by the index E, and less numbers than 100 by the index *p* on the outer scale.

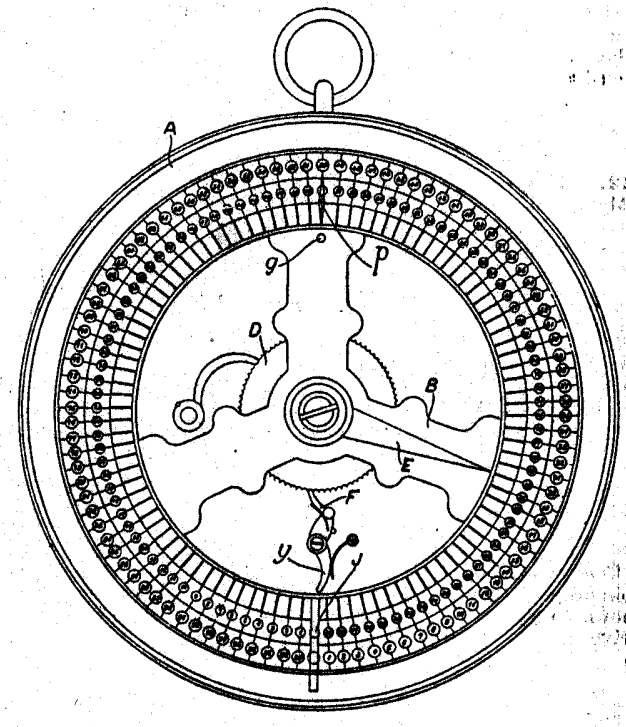

Newton & Michell 474/1908 Check cipher apparatus

474. Newton, H. C., and **Michell, A. G. M.** Aug. 5, 1907, [*date applied for under Section 91 of Patents &c. Act, 1907*].

FIG. 1.

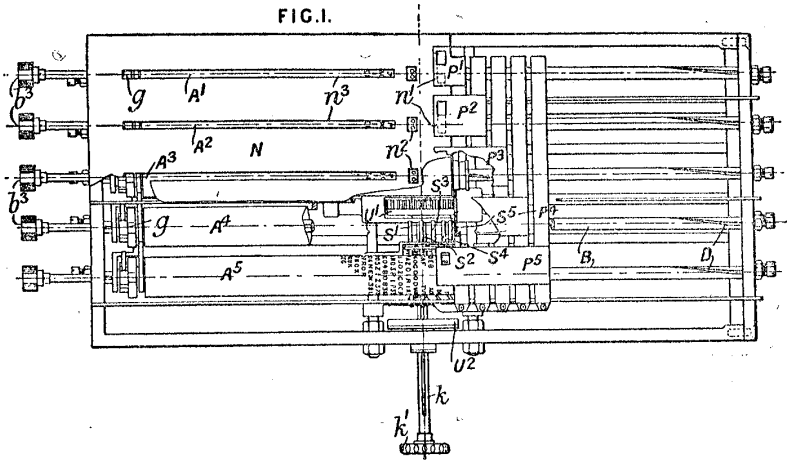

FIG. 4

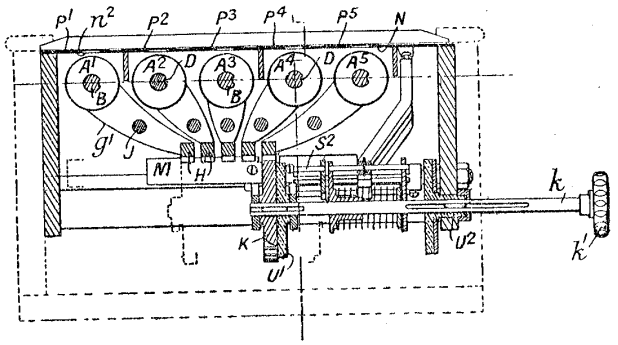

Calculating - apparatus.—Relates to integrating-mechanism in connexion with a check cipher apparatus. A series of rollers $A^1 \ldots A^5$ are adjusted, so as to expose numbers and syllables on the rollers through apertures n^1, n^2, by a pinion K acting on racks H attached to the rollers, the pinion being slidable under any one of the racks, a bar M locking the remaining racks in the position to which they were brought by the pinion. A combination of "normal" and "reversed" syllables are exposed at the windows n^1 by shutters $P^1 \ldots P^5$ actuated by circumferentially arranged rods $S^1 \ldots S^5$, which are moved through varying amounts according to whether they are opposite one of sixteen holes in the "pinion-key" disk U^1 or those in the "locking-key" disk U^2, both these disks turning with the pinion K. The holes in these disks are so arranged that one of the thirty-two possible combinations of, in this case, five "normal" and "reversed" syllables is exposed which corresponds to the sum of the numbers exhibited at the windows n^2 or to the remainder after dividing that sum by 32, so that on decodifying, the correctness of the message transmitted is tested by withdrawing the head k^1 after the syllables have been set, when the shutters should remain undisturbed. A modified form of "pinion-key" and "locking-key" is described, in which the rods $S^1 \ldots S^5$ are arranged radially, there being five circles of holes. A modified form of checking-gear has a large shutter-plate having thirty-two differently arranged rows of apertures moved by a rack and a pinion on the spindle k and located by a stop in a position dependent on the number coded.

2 x

Newton W E As agent 645/1858 Keyboard Adder

645. Newton, W. E., [a communication]. March 26. [*Provisional protection only.*]

Calculating-apparatus.—A machine for addition of numbers, or sums of money, consists of a system of indicating-wheels, suitably numbered and geared, to suit any system of numeration. The indicating-wheels are actuated by finger-keys with vertical pins beneath them. Below the pins is a series of steps of different depths according to the numerical value of the key, to prevent the pin from being depressed beyond the desired point. Each pin is provided with a horizontal stud which, when any pin is depressed, carries down a horizontal bar connected with a rocking frame which pulls round a ratchet-wheel and with it the driving-shaft and thus the toothed driving-wheel on the latter. The indicating-wheels and the gearing connected therewith are capable of being shifted laterally to bring the toothed gear of any particular indicating-wheel opposite to and in gear with the toothed wheel on the main driving-shaft. The indicating-wheels are provided with means whereby the motion of any one wheel is at the proper time communicated to to the wheel of the next higher denomination. For the addition of money amounts, the arrangement of wheels is suitably modified.

Nezeraux P 1272/1875 Tab calc price by weight etc.

1272. Nézeraux, P. April 8. [*Provisional protection only.*]

Computing-scales.—Relates to proportional scales described in connection with a weighing-machine, for indicating the values of goods weighed, but stated to be also applicable for indicating prices corresponding to linear or other measures. The scale of weights or measures G^1 is provided with a tube H marked with a number of parallel longitudinal scales representing values at different prices, so that transverse readings from the linear scale give the corresponding values. The tube may be rotated by a milled end, and the scales may be printed on paper and stuck on the tube, or be printed on an enamelled-iron tube, or engraved by means of galvano-plastic proofs.

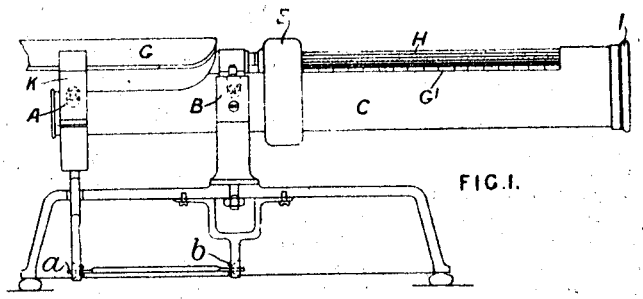

FIG. 1.

Nicholls E C 17368/1912 Adder on type writer

17,368. Newton, G. T., and **Nicholls, E. C.** July 26.

FIG. 1.

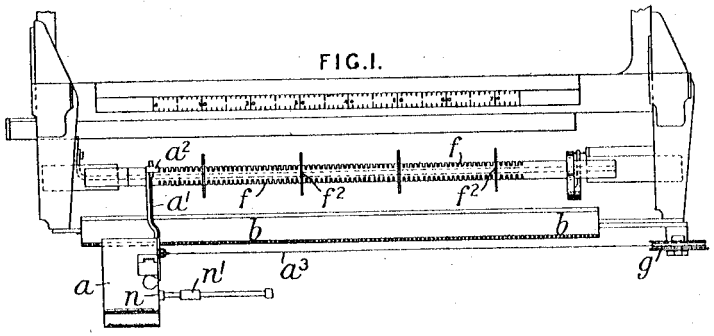

FIG. 3.



Adding-apparatus; attachments and connexions to typewriters.—In computing-machines formed by the addition of a totalizing-counter and differential actuating-mechanism therefor to a typewriter, of the type described in Specification 11,696/07, the totalizer is mounted loosely upon the carrier bar of the typewriter carriage, and is urged to the right by a spring. A special notched bar is also mounted upon the carriage, in which are adjusted lugs for engaging the totalizer in desired columnar positions and carrying it with the carriage for one column space, when it is automatically released and returned by the spring. The arrangement is shown in elevation in Fig. 1, wherein the totalizer a is mounted upon the bar b and urged to the right by a cord a^3 and spring drum g, the normal position being defined by the abutment of a stop n on the totalizer with a stop-member n^1 adjustably secured to the framework of the machine. Lugs f^2, Fig. 3, are inserted in the notches of the special bar f according to the desired column positions. Each lug, when it reaches a hinged latch a^2 upon an arm a^1 attached to the totalizer, carries the totalizer with the typewriter carriage so that the figures printed are added upon the proper denominations of the totalizer. When it is desired to add in the next column, one of the usual tabulator keys is depressed, and by means of a ratchet-mechanism a rotation of the bar f is effected, whereupon the totalizer latch a^2 slips through a gap f^3 in the lug and moves to the right until arrested by the next lug. As the carriage is moved back at the end of a line, the hinged latch a^2 yields against a spring in order to slip over the lugs.

Nicholls H G 2618/1904 Navigation calc

forwards the circular rack 39 and a transverse bar 43 mounted thereon. At the upper end of this bar is a spring pricker 45 which is pressed against the travelling strip of paper at regular intervals by projections 47 on the controlling shaft 21, which, through the lever 41, rotate the shaft 38 and with it the transverse bar 43 and pricker 45.

2618. Nichols, H. G. Feb. 2.

Calculating-apparatus.—An apparatus to be used for the mechanical solution of navigational and other problems is shown in plan. A rectangular frame a^3 is mounted in a casing a^2 and is graduated along two sides as shown. A graduated arm b, pivoted at a^7, carries a sliding vernier b^7 from the underside of which projects a pin, which passes through slots d^6, d^7, in frames d^4, d^5. These frames are fitted to slide at right-angles to one another on slides d^2, d^3 respectively, the various movements being read off on the scales c^4, c^5 by means of verniers. When the vernier b^7 is clamped to the arm b, any movement of the latter results in the simultaneous movement of the frames d^4, d^5. When the vernier b^7 is unclamped one of the frames may be clamped, allowing then of the simultaneous movement of the other frame and the arm b. The end of the arm b

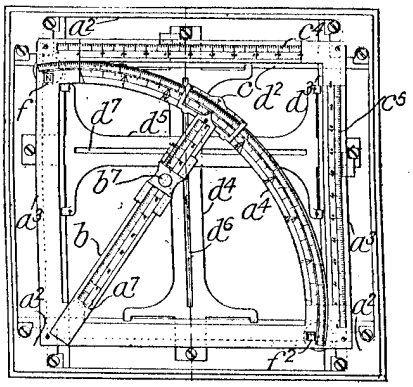

is fitted with a vernier c and works against a quadrantal arc a^4, which is divided into degrees, reading from zero at each end, and also into the points of the compass for any given quadrant of the compass determined by indicators f, f^2.

Nichols W K 6220/1894 Adder

6220. Nichols, W. K. March 27.

Calculating and counting apparatus; receipts, checking and recording.—A series of peripherally figured adding wheels 73 are connected on a fixed shaft 54 by concentric sleeves to discs 71 provided with peripheral pins and are mounted in a frame 150, which can be shifted longitudinally so as to bring any disc engagingly within a combined ratchet and toothed annulus 60, which is carried concentrically by a rotary yoke 61 spanning them from its hub on the shaft. A ring 66 loose upon the yoke carries a driving dog engaging the ratchet teeth of the annulus and is linked to a treadle which is operated by finger keys of different value. The provision for shifting the wheel frame consists of a spring lever 160 which urges it to the left end of an escapement device, namely, an attached rod 164 studded with opposite pins breaking spaces and a key 170 to release the pins in succession. The carrying mechanism between the wheels is as follows:—A ratchet toothed flange on the higher value wheel lies within a plain flange 145 on the lower value wheel and is driven each time a spring finger 147 upon the outer flange is pushed down through it by a fixed cam 156. The adding wheels also have ratchet teeth engaged by pawls to prevent reversal, and all but one are turned forwards to zero by a rake. The highest value wheel is restored to zero by a spring 190 when its non-reversal pawl is tripped.

FIG. 6.

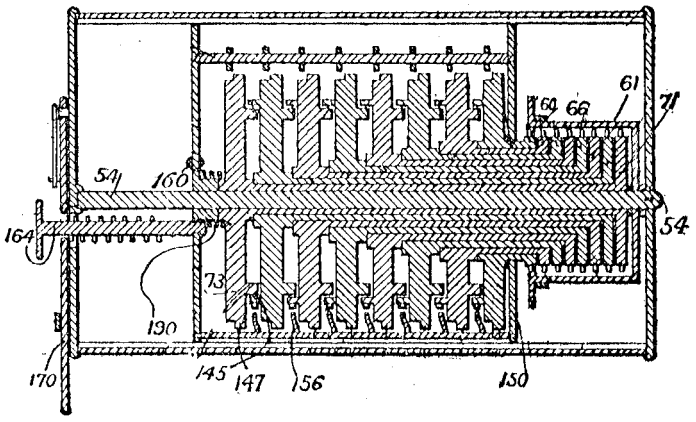

© B O B Williams Printed22/11/2023 CalcPatents Ed. 1.doc

Nicolas F 21284/1908 Tab calc

21,284. Nicolas, F. *March 30, 1909.*

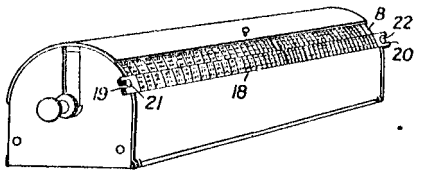

Calculating - apparatus. — In simple computing-apparatus of the type in which a table mounted upon a rotatable cylinder co-operates with a fixed scale such as 18, the ends of the fixed scale are provided with slots 19, 20 and set-screws 21, 22 which permit of slight longitudinal adjustment of the scale relatively to the cylinder B.

Nicole P 112416 of 1916 Proportional calculator

112,416. Nicole, P. Dec. 30, 1916, [*Convention date*].

FIG. 1

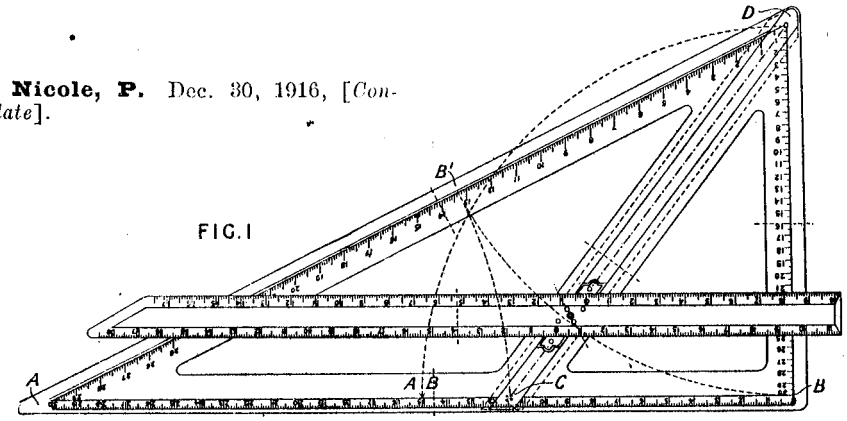

Proportional calculators.—The instrument is constructed to divide numerical quantities represented by lengths so that the square of one part is equal to the product of the whole length and the other part. The base AB is twice the length of the side BD and a point C is found on the base by making DB^1 on the hypoteneuse equal to BD and then making AC equal to AB^1. A scale is movable parallel to the base in a guide along the line CD and the side BD is divided to represent lengths of the base to half scale. The zero on the parallel scale is on the line CD and the lengths of the parts into which the given length is to be divided are read on the intersection with the lines DB, DA.

Niebuhr H 6102/1907 Integrating mechanism

6102. Niebuhr, H. March 14, 1906, [*date applied for under Patents Act, 1901*].

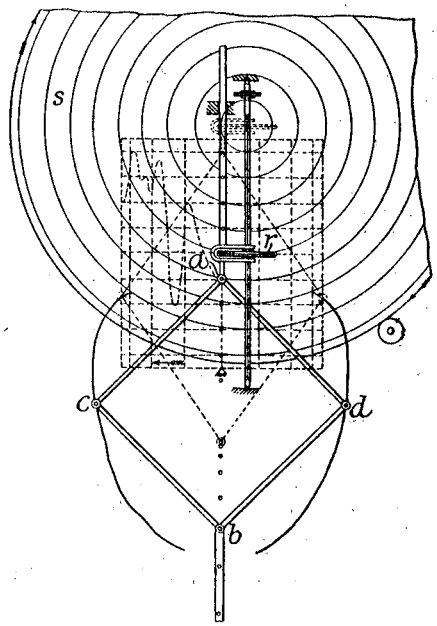

Calculating-apparatus; integrating-mechanism for measuring-apparatus; modifying scale of records and the like; speed indicators.—An apparatus for recording or integrating according to time a definite function of an independent variable is described as applied to curve drawing, calculating the function for given values of the independent variable, and the like, or as forming the terminal element of some form of measuring-instrument, such as a speed indicator, or an electricity, gas, or liquid meter. The point *b* of the jointed parallelogram moves according to the independent variable, other points *c*, *d* thereof are constrained in guides shaped according to the functions, and the fourth point *a*, or some point rigidly connected thereto, carries a tracing-pencil or the frame for the integrating-roller *r*, which is rotated by a clock-driven disk *s* and registers upon a counter.

Nimmo A 2451/1883 Calculating callipers

2451. Day, St. J. V., [*Nimmo, A*]. May 16.

Callipers; calculating-apparatus.— Relates to apparatus for measuring the diameter, circumference, surface, volume, weight, &c. of various bodies. In Fig. 1 the inner edges of the shanks *b* are radial. Notches *d* are formed in the inner edges of the inner ends of the shanks, and notches *e* at the outer ends. If the diameter of a cylinder &c. be measured between the points *g*, *g*, the distance between the points *f* will indicate the circumference; knowing the diameter and the circumference, the volumes and surfaces of spheres and cylinders may be found by multiplication or forming rectangles. The distance between the corners *h*, *h* will indicate the weight per foot of cast-iron rods; other marks on the shanks *b* will indicate the weights for other metals. To find the area of a rectangular bar, one dimension is taken between the points *g*, *g*; the distance between points on the shanks which indicate the other dimension will give the area. To find the total steam pressure on a piston &c., the diameter of the piston is taken between the points *g*, *g*; the distance between the points *f*, *f* will give the total pressure if the pressure per square inch is 40 lbs.; for other pressures multiplication is required. In another form the shanks *b*, *b* are next the joint; if a diameter be taken between points near the ends, the distance between the extreme ends will give one-third the circumference, while the distances between points of the scales on the shanks will give other fractions together with the corresponding angles; another scale gives fractions of the diameter; and another gives the proportions for teeth for gear-wheels when the diameter of the pitch circle and the pitch or number of teeth are known. Fig. 8 shows another form with an adjusting-screw for giving fractions of circumferences, the diameter being taken between the corners *w*.

FIG. 1.

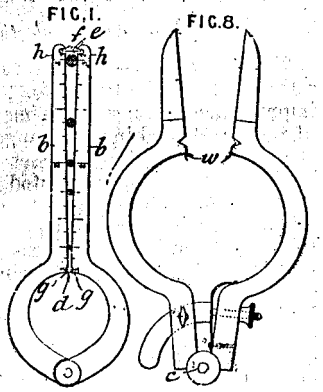

FIG. 8.

Niven G 25073/1893 stylus adder

5,073. Niven, G. Dec. 30.

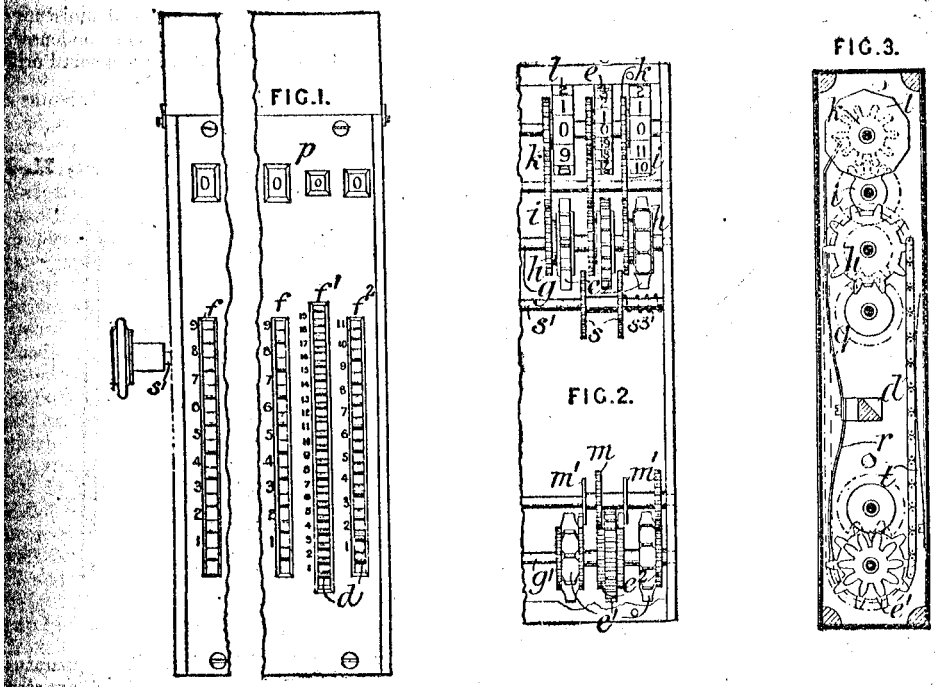

Calculating-apparatus.—A number of bands or chains d, d, visible through slots f, f^1, f^2 in the cover of

91

the casing, are carried on toothed wheels e, e^1 mounted loosely on spindles g, g^1 respectively. The edge of the pence-slot f^2 has 11 equal divisions, the shillings-slot f^1 has 19, and the pounds-slots f, f 9 each. Mounted on the wheel e^1 of the pence-band is a wheel e^2 in gear with a wheel m, with which rotates a disc m^1 carrying a pawl which rotates the shillings-wheel e^1 through one tooth on the completion of each revolution of the pence-wheel e^1, and, similarly, the shillings-wheel e^1 rotates the pounds-wheel, and so on. The wheels e, through wheels h, i, and k, rotate drums l, l, on each of which is a suitable series of numbers visible through an opening p in the casing. The machine is operated by means of a style by which the various bands are manipulated to total columns of figures. Springs q and r render the wheels k and e^1 dead-beat, and springs t take up the slack of the bands. To return the various drums l to zero, a spindle s^1 is pushed in, against a spring s^3, until the wheels s, s gear with the wheels h, h, from each of which a tooth is omitted at a point corresponding to the appearance of the zero on its drum l at the opening p. By rotating the spindle s^1 the various drums are rotated.

Nolan J P 1566/1869 Range finder with calc scales

1566. Nolan, J. P. May 20. *Drawings to Specification.*

Calculating - apparatus. — A range - finder for attachment to guns in the field &c. consists of a pair of angle-measuring instruments and a separate calculating-rule for showing the distances corresponding to the angles measured. The rule consists of a wooden or other cylinder at each end of which is a movable ring, the cylinder and rings being graduated to give the distance of the object when the distance between the two angle-measuring instruments and the angles are known. An additional scale, proportioned to the logarithms of the sines of angles, may be made on the rule ; also a scale to show the lengths of time fuses to correspond with the ranges.

Norman H 26162/1912 Tab & Log calc for box making

26,162. Norman, H. Nov. 14.

Tabular and logarithmic calculators.—Apparatus for determining the times required for the manufacture of cardboard boxes of various sizes comprises a scale *e*, *f* representing in inches the sums of two dimensions of the boxes, and a scale *e*, *g* representing the third dimension. The intersection of co-ordinates corresponding to these values is denoted by a letter, similar letters representing virtually curves of equal times derived from experimental data. These scales are mounted on a rotatable disk *b*, the edge of which bears a logarithmic scale of "time-values": the fixed base *a* is graduated as shown. The apparatus must first be standardized for use with a given type of box by ascertaining experimentally the times required to make one or two such boxes of a certain size or sizes. The letter corresponding to the dimensions of the box is found in the table, and the disk *b* is adjusted so that the actual time-value experimentally determined and given on the

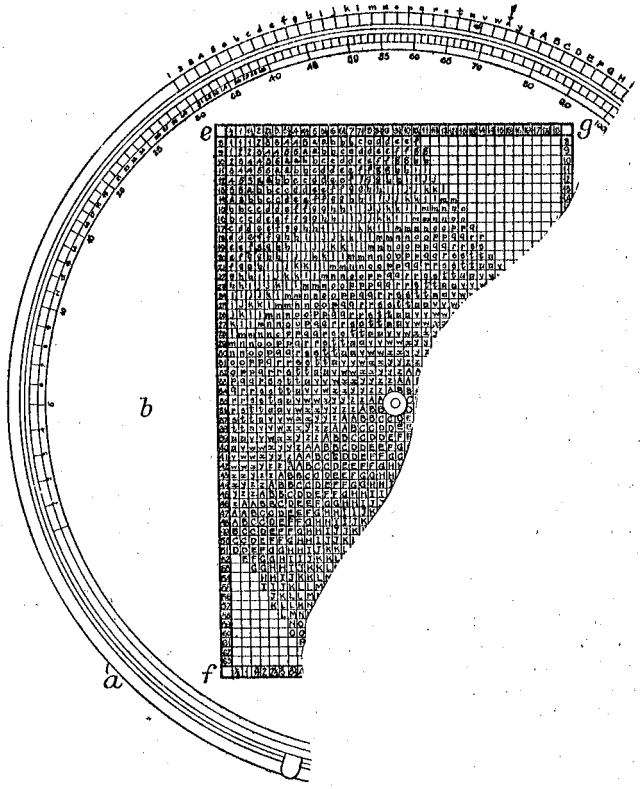

425

Norris T 10583/1895 Circular slide rule.

10,583. **Norris,** T. May 28.

Slide rules.—Relates to slide rules preferably of the circular disc type, and consists: (i) in forming holes a, a^1 through the bottom disc to enable the upper one to be turned without moving the lower; (ii) in providing a slotted frame B pivoted at the centre to carry a semi-cylindrical lens C for magnifying the graduations in one direction only. A hair or a scratch in the glass runs centrally down

FIG. 1.

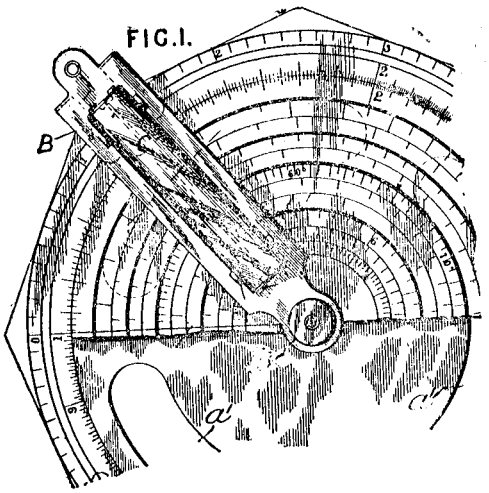

the face of the lens to facilitate reading. Similar reading glasses may be applied to straight slide rules.

Numerograph Mfg Co 10070/1900 Adder printer

10,070. Marks, G. C., [*Numerograph Manufacturing Co.*]. May 31.

Calculating - apparatus; receipts, checking and recording. —Relates to a machine for recording and adding numbers and for listing checks, notes, &c. in banks &c A series of printing-discs or type-carriers 1, Fig. 4, are arranged side by side and loosely on a shaft 2. The carriers have teeth gearing with pinions 4 loose on a shaft 5 and operated by setting-up segments 7 supported loosely on a hollow shaft 8 carried by a shaft *g*. The selectors lie normally out of engagement with the pinions 4. When a spring-supported key 27 is operated, the disengaged selectors are rotated an amount proportional to the numeral on the key, and at the end of the rotation the end selector is slid into engagement with the adjacent pinion 4. A bar 11, having a splined connection with the disengaged selectors, is carried by arms 13 secured to the sleeve 8 carrying a segment engaging a rack bar 16 supported by a roller and operated by an arm 19 on a rock shaft 20 carrying a crank 22 with arms 23 having lips 25 resting on the key levers. A segment of a ratchet, fixed to the sleeve 8, is engaged by a detent lever on the rock-shaft 20, and connected to a cross-bar 29 of the space frame, as the movement is completed, so as to prevent over-throw of the parts. The space frame consists of a bar 31, extending under and operated by the key levers, and arms 32 journalled on the rock-shaft 20. The space bar is operated as the key completes its stroke. A second detent lever engages a second ratchet segment on the shaft 9, and is operated by an extension of the arm 32. The selectors are confined between two posts 33 secured to a rack bar 35 connected with and controlled by escapement mechanism similar to that used on type-writers, and consisting of a spring drum 36, Fig. 7, carrying a toothed wheel 37

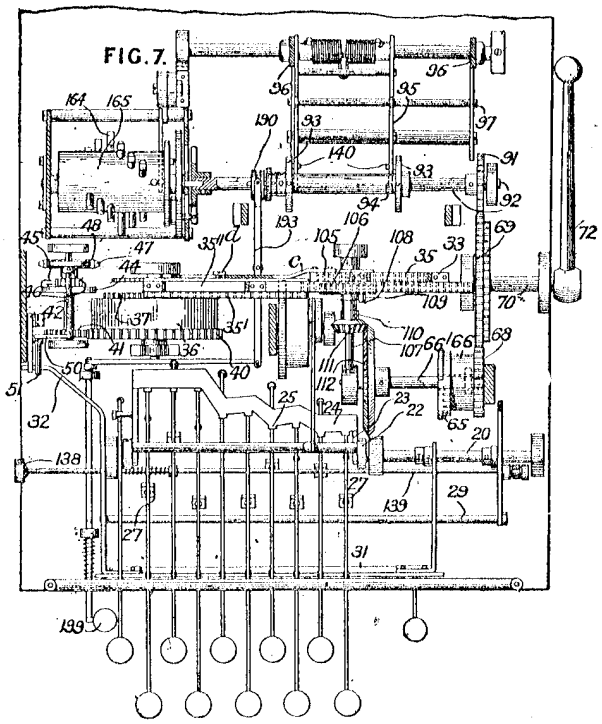

© B O B Williams Printed22/11/2023 CalcPatents Ed. 1.doc

Oakes & Jackson 12966/1892 Adder

12,966. Wise, W. L., [*Oakes, C. A.*, and *Jackson, J. H.*]. July 14.

Calculating apparatus. — Relates to adding-machines. A wheel P^{I}, showing peripherally the numbers from 1 to 99, is advanced with a ratchet-wheel M^{III} driven as follows :—The units are added

273 8

O'Brien & Browning 3761/1899 Adding with Balls

3761. O'Brien, B. T., and **Browning, W. H.** Feb. 20.

FIG.1.

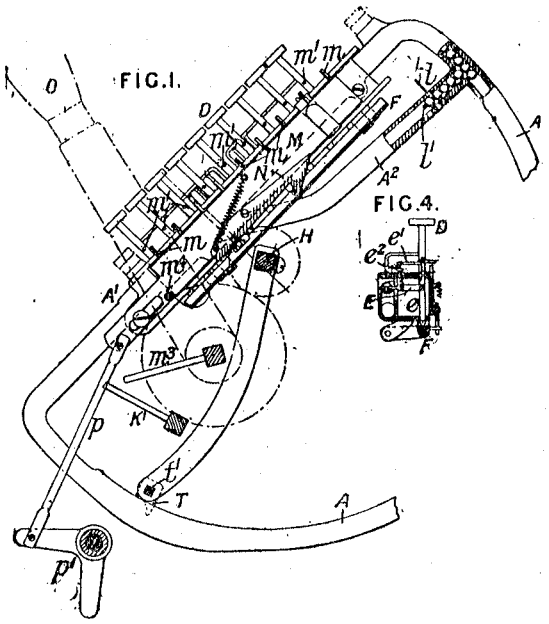

FIG.4.

FIG.2.

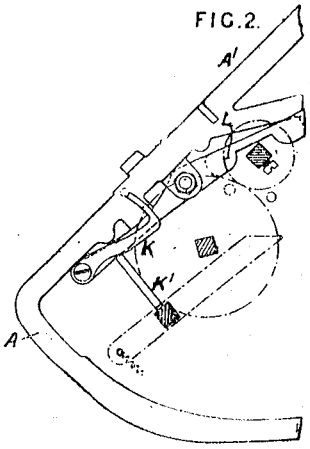

Calculating-apparatus.—Relates to improvements in the calculating-apparatus described in Specification No. 21,558, A.D. 1894, in which the total is indicated by the number of balls in a series of graduated tubes. The tubes A are D-shaped, so that the reading portion A^1 is straight. A branch A^2, controlled by an escapement latch L, delivers an extra ball to the part A^1 whenever the display portion of the tube next before has received ten or more balls, and thus effects the necessary 'carrying.' For this purpose the finger K is pressed into the next tube at each operation of the machine by a finger K^1 and when, owing to the accumulation of ten or more balls, its movement is resisted, the latch L turns with it about one of the balls as a fulcrum and a ball is discharged down the tube A^2 by the escapement fingers l, l^1. The balls that are released and pass into the lower part of the tube A are carried up again by elevators T on the arms t^1 secured to a shaft H geared with the shaft of the handle O. A slightly-eccentric portion of the tube allows the balls to pass the elevators when in their normal position. The ball-releasing keys D act on pivoted cross-bars F carrying pins e to which the releasing-latches E are pivoted; the latches are connected by springs e^2 to pins e^1 so as to prevent breakage, in case the latch jams, when the bar F is returned. A series of sliding plates M are connected by links and levers p, p^1, &c. with sliding type-bars, and, whenever a key in any row is depressed and the bar F lowered, the corresponding latch N is released and the plate M slides till a pin m strikes a pin m^1 on the key, the movement being proportional to the value marked on the key. The type-bars are thus correspondingly set beneath a platen which takes an impression of the amount on a paper strip through a carbon strip or the like. The strips are subsequently moved forward by pawl and ratchet mechanism. The fingers m^3, striking pins m^4, return the plates M to normal position at the end of the operation. In a modification, the tubes are replaced by rods and the balls by sliding rings.

© B O B Williams Printed22/11/2023 CalcPatents Ed. 1.doc

O'Connor C M M 29043/1911 ASMD Disks

29,043. O'Connor, C. M. M. June 12, [*Convention date*]. *Void.* [*Published under Section 91 of the Act.*]

FIG. 1.

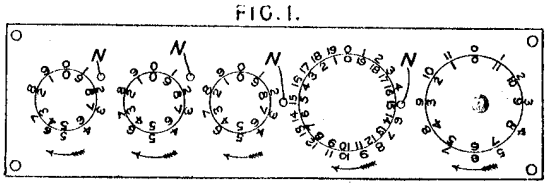

FIG. 2.

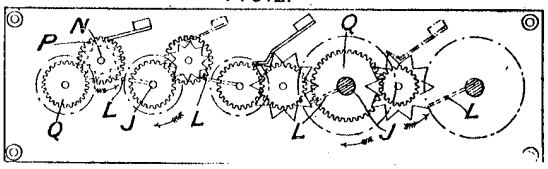

FIG. 7.

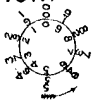

FIG. 11.

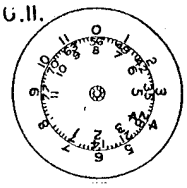

Adding and subtracting apparatus.—In apparatus for performing addition, subtraction, multiplication, and division, a number of disks are provided, mounted on separate spindles and visible through apertures in the casing; the apertures are marked with a series of numbers arranged in the reverse order to corresponding series marked on the disks. Figs. 1 and 2 show the arrangement for calculating in pounds, shillings, and pence. The disks are rotated independently by knobs on their spindles J and are adapted to receive movement from the lower disk by means of a wiper L, a star-wheel on an intermediate spindle N, and gear-wheels P, Q. In a second method of performing subtraction, a double series of numbers is arranged around the apertures in opposite directions as shown in Fig. 7, which numbers may be in different colours.

Multiplying and dividing apparatus.—A separate disk is provided for each multiplier and is marked with two series of numbers to represent the product and quotient, as shown in Fig. 11, for the particular factor, in this case '7.'

Odell & Doanst 8034/1915 Punch card for wages

8034. Ketley, C. B., [*Odell, G. W.*, and *Doanst, E.*]. *July 16, 1914.*

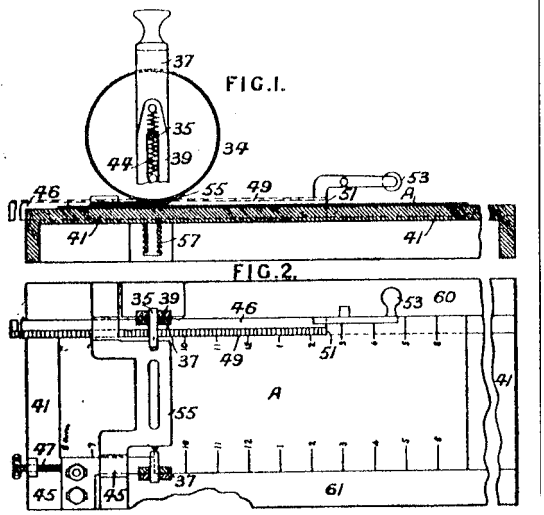

Statistical machines ; computing cards for wages.—Apparatus for recording the time and wages of work as represented by a card cut by the machine described in Specification 16,884/14, [*Class* 106 (iv), Indicating &c.], comprises a stop against which one notch in the card is placed, and a sliding bar which is moved until it abuts against the end of the other notch, thereby rotating a type-wheel, which is then depressed to print the time and wages on the card. A drum 34, bearing type to indicate time-intervals and preferably corresponding wages, is mounted in a frame 37 arranged to slide between slotted uprights 39 so that the ends of the spindle 35 project into the slots. The notched card A is placed on the base 41 between guides 60, 61, so that its incision representing the time of beginning work abuts against a stop 45, adjusted by a screw 47 to have its edge immediately below the spindle 35. A bar 46 sliding in a groove in the base is then moved by a handle 53 until its edge 51 comes in contact with the end of the incision in the card A representing the finishing time. The drum 34 is thus rotated by a rack 49 and is then depressed, against the action of springs 44, to print on the card the time &c. taken by the work. The drum is inked by any ordinary means and may print through a slotted mask 55. In order that the rack 49 may remain in gear with the drum, the bar 46 rests on a spring 57.

Odhner W 13700/1890 Arithmometer

13,700. Odhner, W. Aug. 30.

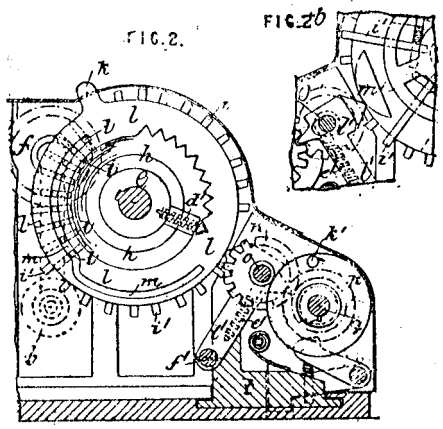

Calculating - apparatus. — Relates to arithmometers. Peripherally-figured adding-wheels *p* are geared by idle wheels *n* on a shaft *o* with discs *h* fast on a shaft *e*, having each nine spurs *i*, any

118

Oelschlager W 11029/1909 Circ slide rule

11,029. Oelschläger, W. May 10.

Slide-rules. — A logarithmic calculator of the circular-disk type comprises two concentric scales *b*, *c*, the latter of which is rigidly connected to the back plate *e* of the casing, while the former is mounted on a dished plate *h* and by means of a spring *g* is normally in frictional engagement with a transparent annular disk *d* fixed to the upper part of the casing, to which is also attached the ring *f*. The transparent disk *d* serves as a cursor, for which purpose it is provided with one or more fine lines. When the scales *b*, *c* are set relatively to one another by means of the plate *e*, the dished plate *h* is depressed against its spring and the scales are thus fixed in position relatively to one another by means of a friction disk *i*. The cursor *d* can then be turned relatively to the two scales by means of the ring *f*. Scales *k* of logarithms, sines, tangents, &c. are provided at the back of the casing and can be read through an opening *l*, and a spring-controlled measuring-tape *n* is mounted between the scales at the front and back of the casing. Other data may be added at the back of the apparatus beneath the slot *l*.

FIG.2.

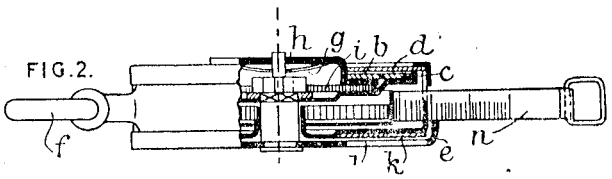

Oginaga J J 2457/1882 Position of vessel at sea

2457. Justice, P. M., [*Oginaga, J. J.*] May 24.

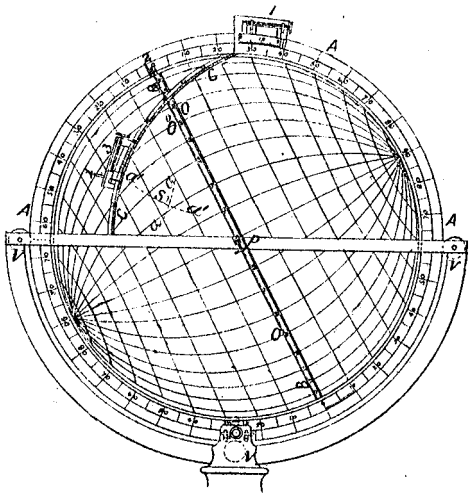

Calculating-apparatus for determining the position of a vessel at sea. An adjustable globe is provided with graduated bars serving as meridian A, A, equator B, B, and quadrant C, C, together with the requisite verniers, 1 for latitudes, 2 for longitudes, 3 for altitudes. Two observations of suitable heavenly bodies are made in different verticals, preferably with an azimuthal difference of 90° ; these are used in tracing arcs a, a, a^1, a^1 of parallels of illumination. The centres of these arcs are the geographical points which at the moment of observation have the observed bodies in the zenith, the radii are the zenithal distances of the celestial bodies, and the intersection of the arcs at S the geographical position of the vessel required. The arcs are traced by a pencil fixed at the zero point of the vernier 3. The equatorial rack O, O is provided with a micrometer screw P, which may be easily connected and disconnected. V, V, V are the tangent points on which the globe rests. When the sphere has been brought to its required position and fixed, the longitude of the pole of one of the altitudes taken is made to coincide with the meridian A, A by means of vernier 2, vernier 1 being fixed in its corresponding latitude, the pencil secured in vernier 3, according to the true altitude, traces out one of the arcs. By repeating this operation for the other altitude taken, a second arc is obtained intersecting at the geographical position of the ship. The sphere may be employed for the graphical determination of the latitudes by ex-meridianal altitudes, longitudes by chronometers, or any other problem, and likewise for the course and distances by great-circle sailing, also for azimuths by the hour, or altitudes with a view to determining the deviation of compasses.

Abridged also in Classes *Philosophical instruments ; Writing-instruments &c.*

Oliver N 351/1893 Astronomy

351. Marks, G. C., [*Oliver, N. R.*]. Jan. 7.

Calculating-apparatus, for finding latitude and longitude from the results of observations of meridian altitude and declination of a star, and local and chronometer times, respectively. A circular base-plate having a raised rim G is provided with a central pillar carrying discs A, B, D, E (shown incompletely at the sides), which support rings C, F. The parts C, D are fixed relatively to the base G, while the others are revoluble by teeth engaging pinions with milled heads 1, 3, 4, 5. Details of construction are specified. In using the latitude portion of the instrument, the disc A is turned until vernier *x* on it indicates the declination on graduations on the disc B; the discs A, B are then clamped together by a bolt 2, and turned until a vernier *y* on the disc B indicates the meridian altitude on graduations on the fixed ring C. The graduations are arranged so that the vernier *z* on disc A then shows the latitude on ring C. The outer parts D, E, F, G are graduated and used similarly to give longitude in time or arc, a bolt 6 being provided to clamp the parts E, F together. A magnifying lens may be supported by a joint arm on the central pillar, for observing any of the verniers. The latitude and longitude parts may be constructed as distinct instruments.

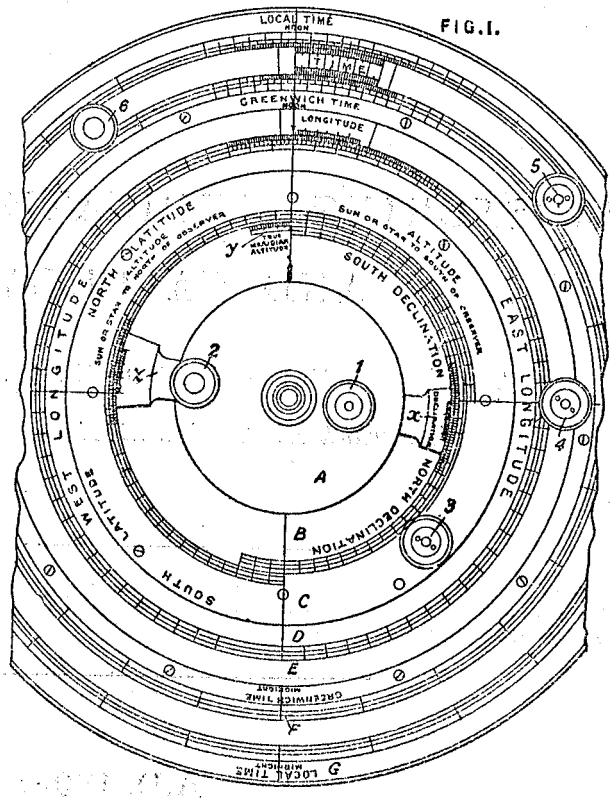

Ommundsen H 461/1912 Adder Bridge scorer

461. Ommundsen, H. Jan. 5.

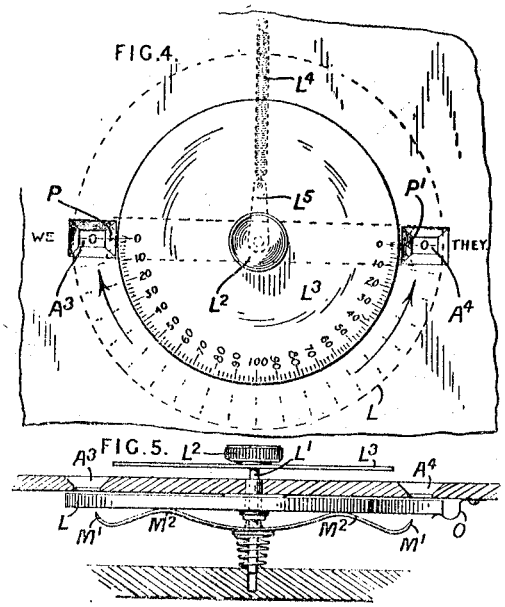

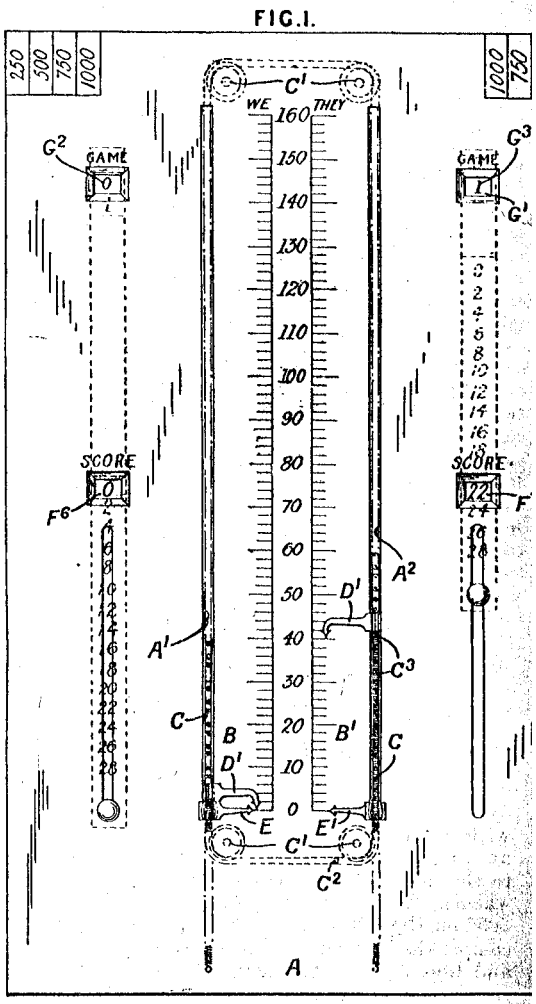

Adding and subtracting apparatus. — Relates to a scoring-device, primarily intended for use in the game of 'bridge,' and of the type which indicates the algebraic sum of the scores. In the form shown in Fig. 1, a chain C passing round rollers C^1 beneath a plate A, is fitted with two projecting pins C^2, C^3 adapted to engage pointers D^1, which slide in slots A^1, A^2 and are attached to springs which tend to draw them downwards to the zero of a central scale B, B^1. Two other pointers E, E^1 slide in the slots A^1, A^2 and are constructed so as to grip the chain C when they are seized with finger and thumb to move them up the scale. To register a score, the appropriate pointer E or E^1 is seized and moved up to the required number. This action moves the chain C by an equal amount and hence also the pointer D^1 which is not at zero, thus adding or subtracting the score according to whether the pointer E, E^1 that is moved is in the same slot as the pointer D^1 or not. The difference between the scores is thus indicated and also which of the parties has won. The points in each game are scored on slides F^6, F^7. The end of the game is indicated by one of the slides F^6, F^7 striking one of two auxiliary slides G^2, G^3 and exposing a member G^1. In a modification, Figs. 4 and 5, a numbered disk L^3 is fixed to a spindle L^1 to which a knob L^2 and a spring M^2 having sharp points M^1 are also fixed. Loose on the spindle L^1 is a numbered disk L upon which a spring O presses. To register a score, the knob L^2 is pressed down so as to allow the points M^1 to rise and engage the loose disk L, and turned until the desired number on the disk L^3 is against the appropriate arrow P, P^1. The score appears at one of the openings A^3, A^4. The knob L^3 is then allowed to rise so as to engage the points M^1, and on being released entirely the disk L^3 is brought back to zero by a spring L^4 acting on an arm L^5 fast on the spindle L^1.

© B O B Williams Printed22/11/2023 CalcPatents Ed. 1.doc

Original Odhner 138097 of1919 Logarithmic calculator for P V T of gases

138,097. Aktiebolaget Original-Odhner. Jan. 20, 1919, [*Convention date*].

Logarithmic calculators; computing-scales.—Relates to partly logarithmic means for computing the relations between pressure, volume, and temperature of permanent gases, and consists in an apparatus with pressure and density or "lift" scales co-operating with isothermal curves and with other scales relating to the relative purity and fullness of aircraft hydrogen. Upon a board A, or a sheet secured thereto by means of clips (not shown), are side scales of pressures in inches of mercury, and top and bottom scales of volume of a given quantity of gas expressed as logarithms of the lifting power of hydrogen (or other gas contemplated) in lbs. per 1000 c.ft. The curved lines represent isothermals for various temperatures. Running by means of a slide E upon a lateral guide B is a tubular

FIG. 1.

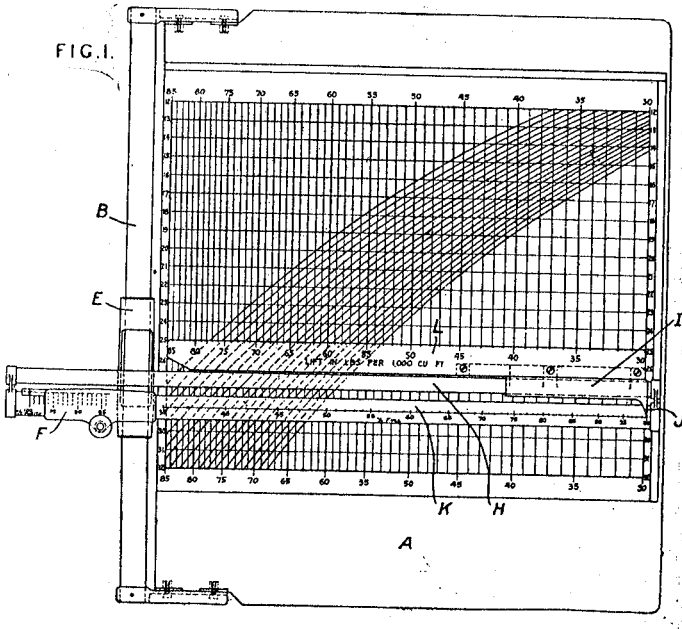

178

Osmonson O A 17317/1905 Solve triangles

17,317. Osmonson, O. A. Aug. 26.

Calculating-apparatus.—Three graduated intersecting bars with clamping-arrangements can be set to triangles of any form and facilitate the calculation of dimensions in timber-work. The two main bars A, B are hinged at their extremities 6 and are composed of upper and lower pieces 2, 1 separated by blocks 3 at the end so that the bars may fit into one another, and may also be intersected by a transverse bar C. All these bars carry scales of length and are slotted for binding-screws 11, the setting for a right-angled triangle being made by means of a block 13 sliding on the bar C and provided with a clamping-screw.

FIG. 1.

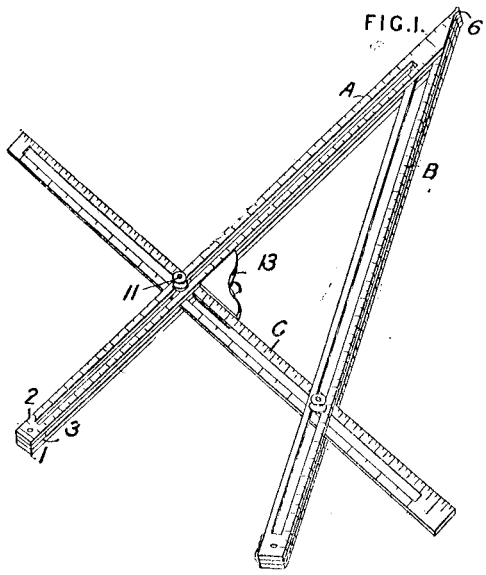

17,342. Campbell, T. M., and **Reid, J.** Aug. 28.

Gauges; measures of length.—A combination tool for engineers contains a spirit level and acts as a scale, a straight-edge, a square, a T-square, a gauge, a depth gauge, a centre square, and compasses or

Oswald R F 22028/1897 Computing scales, sector

22,028. Oswald, R. F. Sept. 25.

Computing-scales. — On the semi-cylindrical legs *b*, *k* of a pair of dividers are marked a series of scales showing lengths, squares, cubes, areas of circles, &c. A link *a* is pivoted to one leg at *c* and to a sliding index *d* on the other. When the legs are opened to measure any length, such length, its square, cube, &c. can be read on the scales opposite the index.

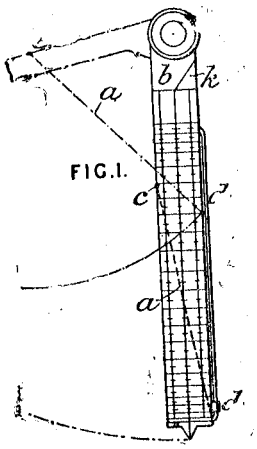

FIG. 1.

Owens J S 16256/1911 Smoke measurer & slide rule

16,256. Owens, J. S. July 14. *Drawings to Specification.*

Slide-rules.—A telescope for determining the blackness of smoke from factory chimneys &c. has a slide-rule of annular form fitted on the tube.

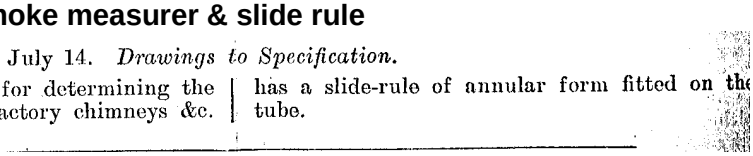

Pailthorpe H N 6439/1909 Adder Age calculator

6439. Pailthorpe, H. N. March 18.

Adding-apparatus.—In an age-calculating machine which delivers a ticket bearing the result &c. seven columns of figures upon panels in the casing are so arranged that the sum of the index figures of all the columns in which the age of the operator occurs gives the age in question. Slides 2 bearing operating-knobs 3 and connected by webs 7 to racks 9 are adapted to be drawn down over the panels, each rack engaging a pinion 11 on a central shaft 10, which bears an indicating-drum 12 having figures on its periphery. As the number of teeth on any rack is equal to the index number of the corresponding figure column, the actuation of those slides which correspond to the columns in which the age of the operator occurs rotates the drum 12 to bring the age behind a window 13 in the casing. A drum 31 is simultaneously rotated through

FIG. 2.

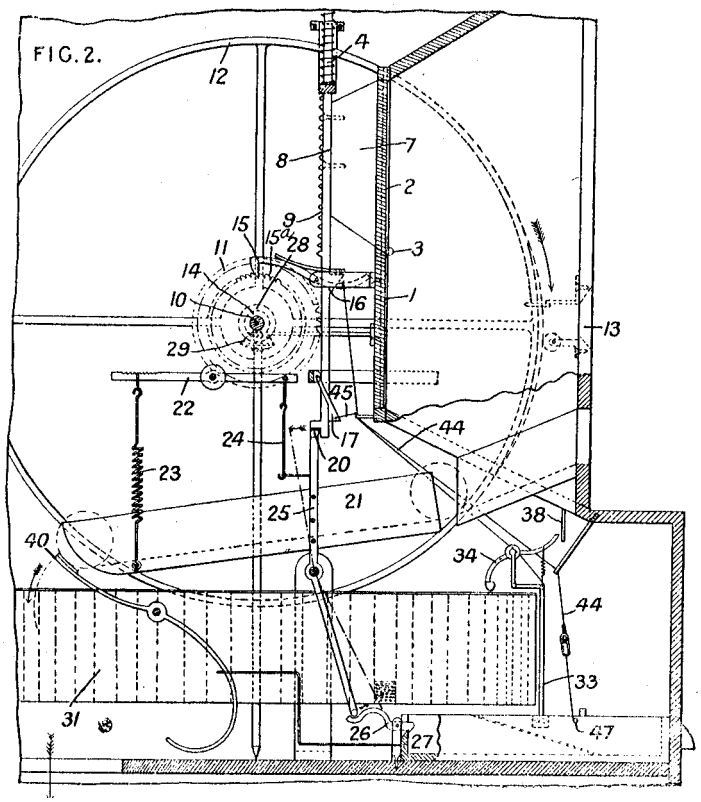

bevel-gear 28, 29 to bring the compartment containing the required tickets above a slide 27. The rack bars are held in the depressed position by the engagement of projections 16 with stops 17, and the spindle 10 and drum 12 are locked by pawls 15 and ratchet-wheels 15a. On withdrawal of the slide 27 a fixed stop 38 tilts a lever 34 carried by an arm 33 on the slide causing the delivery of the topmost card from the compartment beneath. Simultaneously the stops 17 and pawls 15 are withdrawn by cords 44, 45 attached to the slide at 47, permitting the parts to be returned by springs 4, 14. In place of the compartmental drum 31, a drum with peripheral type printing the age &c. on an endless ribbon may be used.

Pallweber J 11300/1904 Adder, noiseless

11,300. Pallweber, J. May 17.

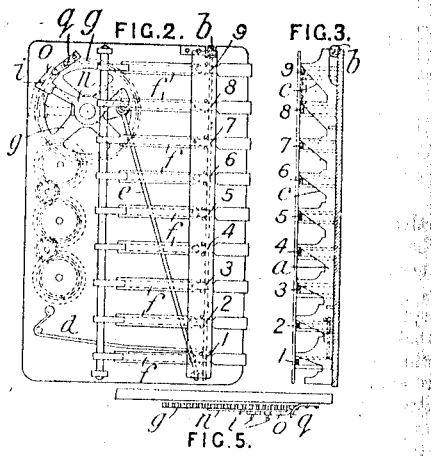

Calculating-apparatus.—An adding-machine is arranged so as to be nearly noiseless. A key, when depressed, slides along an inclined surface *o* of the bar *a*, thereby moving it on a roller *b* a distance corresponding to the number on the key. Springs *f*, *d* move back the key and the bar respectively. The motion of the bar is communicated by a rod *e*, lever, and pawl to the wheel *g* of the counting-mechanism. The stop-pawl *o*, shown in detail in Fig. 5, is loosely held by pins *i* on the piece *n*, and falls by its own weight between the teeth. Its motion is restrained and silenced by the spring piece *q*.

Pallweber J 29477/1904 Small adder

29,477. Pallweber, J. Dec. 31.

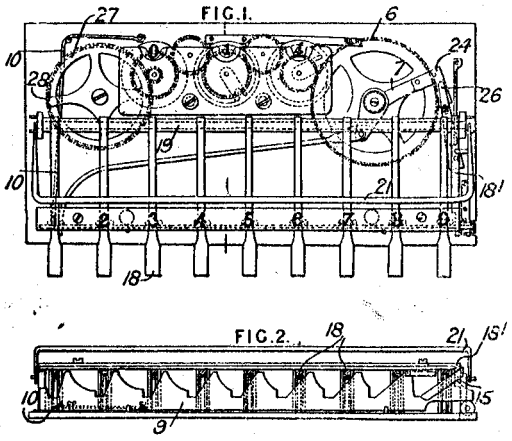

Calculating-apparatus.—A single-bank keyboard machine adds numbers up to ten directly, and higher numbers by repeated operation. The nine keys 18, Figs. 1 and 2, are pivoted upon a common shaft 19, and bear upon the inclined edges of a sliding plate 9 so as to move it to the right when depressed, the degree of motion controlling the stroke of the pawl arm 7, which feeds the ratchet-wheel 6 forwards when the parts are returned by the spring 10. An additional arm 18¹ engages the inclined edge 15, and is operated by the pivoted yoke 21 for the purpose of giving a ten-feed to the ratchet-wheel, which actuates a totalizing-counter of three numbering-wheels, as shown. Gearing with the hundreds' spindle of the counter is a wheel 27 with pin 28, which is used during the clearing operation. The pawl 24 engages with the ratchet-wheel by gravity, and is arrested against a stop piece 26 shaped so as to arrest it gently and obviate noise.

Pantsar K 4011/1901 Counting & adding £ s d

4011. Pantsar, K. Feb. 25.

FIG.4.

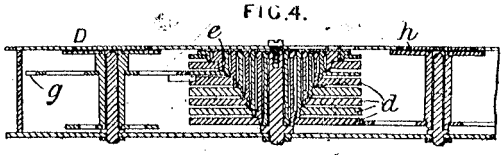

Counting-apparatus.—Consists of concentric spur-toothed numbering-wheels *d*, *e* gearing with carrying-wheels *g*, which are arranged round them on separate spindles, and bear correcting-wheels *h* governed by spring pawls.

Calculating-apparatus.—Each correcting-wheel *h* of the above-described apparatus has attached to it a disc D, E, F, G, H, or I, which occupies an aperture in the cover-plate of the casing and is pierced by ten holes that are distinguished by the zero and nine digits marked clockwise and reversely around the aperture. Addition or subtraction is performed by inserting a pin into the zero hole of a disc and turning it till the pin is at the required addend or subtrahend. Two additional wheels

FIG.1.

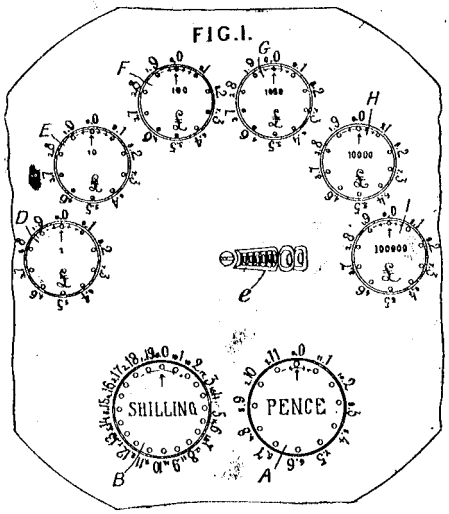

A, B, with corresponding gear, adapt the apparatus to the English monetary system.

Parker W J A & J 5489/1894 Gauge with log scale for depth of hole

5489. Parker, W. J. A., and **Parker, J.** March 16.

Gauges, calliper &c.; measures of length.–The instrument, such as a gauge, or a flat steel measuring rule, as shown in Fig. 1, is fitted with a slide D working in a tube C let into a slot in the rule. A clip, wedge-shaped or spring, is provided for clamping the slide as required. The end of the slide has a bifurcated pointer E running over scales, one of which may be marked with inches, and the other logarithmically so that the instrument can be used as a slide rule. In the application shown, the apparatus is reading the depth of a cylindrical hole.

FIG. 1

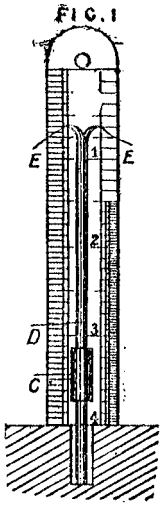

Patent Development Co 395/1907 Tab Calc Rolls

395. Allison, C. A., [*Patent Development Co.*]. Jan. 7.

Calculating apparatus.—In apparatus for multiplication and division, three flexible sheets each bearing a table of products are mounted upon pairs of rollers and placed side by side in a casing

44

which has three graduated slots in its upper plate for reading results; the arrangement gives products up to 100 by 300 directly, but admits of higher factors being employed by suitably combining the results upon the same cross-line in the

FIG. 1

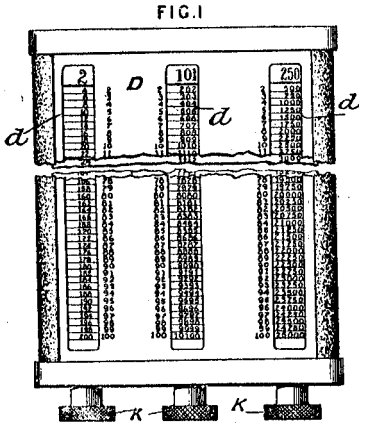

FIG. 5.

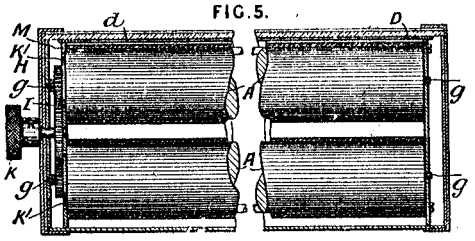

three slots. Fig. 1 shows the upper plate D and the slots *d* with their argument scales, through each of which is visible one column of the table beneath, having its second argument in large numerals at the head of the column. The construction of upper and lower rollers A is shown in Fig. 5; they are mounted on spindles *g* in the casing and rotated in similar directions by the finger-wheel K through spur-wheels I, H, in order that the sheet may be wound from one roller to the other as required. Recesses are made in the plate M for the washers K^1, which come between the pinions and their respective rollers.

Payen L 8893/1908 Thomas type

8893. Payen [*née* Huard], **L.** April 23.

Calculating-apparatus; counting-apparatus.—In multiplying and like machines of the Thomas type, the two sets of wheels, for totalizing the product and indicating a quotient respectively, are each provided with

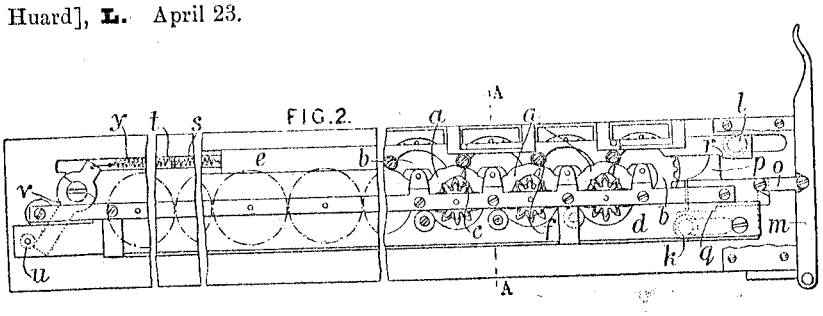

Payne A E H 3675/1899 Tab calc on discs

3675. Payne, A. E. H. Feb. 20.

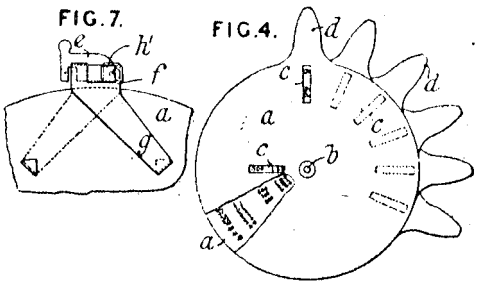

Calculating-apparatus; indicating information.—Relates to ready reckoners and like apparatus, such as tables for indicating insurance premiums, cab fares, &c. Two or more discs are superposed, and are tabulated in circles round a central pivot, slots being provided through which the tables may be read. In the form shown, the discs *a* are pivoted on a pin *b*, and all but the outer discs are provided on both sides with circular tables which can be read through slots *c*. By pressing together some of the tabs *d*, which are marked, say, with the 'rate per lb.', the desired number of slots can be made to coincide so as to read the required table below. Instead of tabs, catches of various forms may be used which lock the necessary discs together with their slots coincident. Fig. 7 shows one such catch, the part *f*, *g* of which is bent from a sheet-metal blank and secured by passing the legs *g* through the disc *a* and bending over their ends. The pivoted latch *e* takes into the hook h^1 of the next disc, the hooks h^1 being bent from the metal blank.

Peard O L 23363/1904 Slide rule for steam

23,363. Peard, O. L. Oct. 29.

Slide rules.—Arrangements of slide rules with logarithmic scales are described for calculating the following quantities:—(1) Loss of heat in waste furnace gases expressed in percentage of normal coal, or British thermal units, from the temperature of and percentage of carbon dioxide in the flue gases; (2) heat transmitted to water and steam, or thermal efficiency from feed-water temperature and weight of water evaporated per pound of coal burnt; (3) kilowatts from ampères and volts. Fig. 4 shows a section through a circular form in which one datum scale is on the disc A attached to the upper rotatable glass cover E, and the other upon the upper side B of a ring attached to the lower cover E^1. Below this ring is the result scale D, which is read against a pointer C upon the central disc. In a modification, all the scales may be read from one side, the scales B, D being upon the same side and the reading-point moving with the scale A. This form may be arranged for a double calculator, as in Fig. 8, where the central disc F turns with the top-plate E and rim J, while the ring G moves with the lower ring J^1, scales being provided both above and below. Fig. 10 shows a band arrangement for use when one of the datum scales is much shorter than the other, the long scale being placed on a band H, which also carries the result scale and is controlled by a hand-driven pulley G^1 and a tension pulley *i*, so as to display the quantities through suitable windows, one of which is marked for the second datum scale and the other has the reading-pointer. Alternatively, the long scales may be put on a drum, or upon a rod with the short scale and reading-point upon a slider.

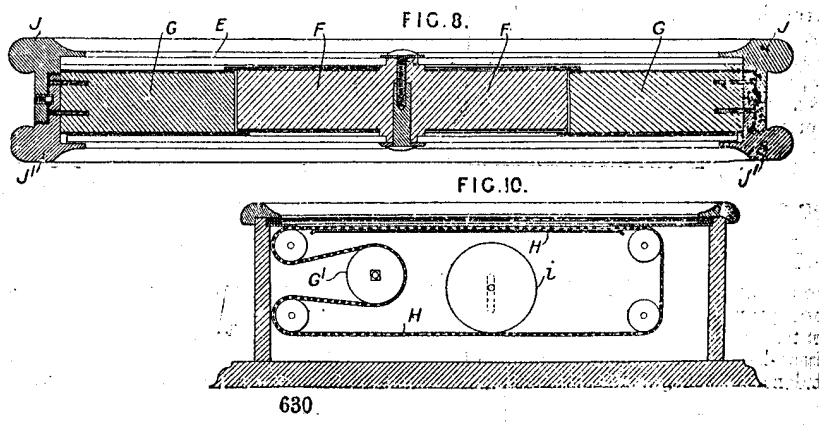



Peabody Leather Mach Co 110364/1909 Area of hides

11,034. Harrison, G., [*Peabody Leather Machinery Co.*]. May 10.

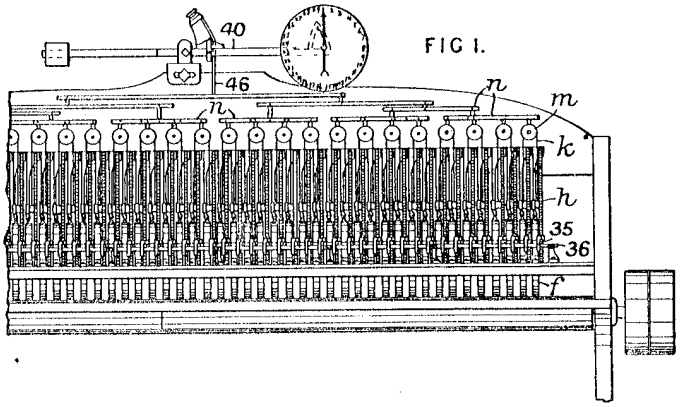

FIG 1.

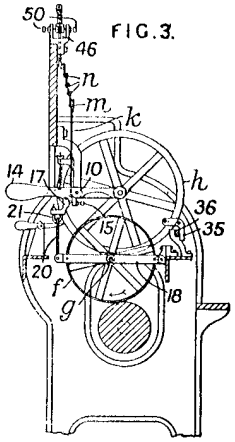

FIG.3.

Surface-areas, computing.—In apparatus of the Sawyer type for measuring the area of hides, skins, and the like, improvements are described in connection with (1) means for adjusting and balancing the toothed wheels, (2) the stops for the wheels, and (3) means for avoiding uneven wear of the fulcrum of the main lever. The measuring-wheels *f* are provided with pinions *g* adapted to rotate the toothed wheels *h*, to the hubs of which are attached cords *k* actuating a pointer through pulleys *m* and levers *n*.

(1) Each wheel *h* is mounted on a lever 10 provided with a balance weight 14 and an adjustable screw 15 bearing on a lug 17, to which is secured an adjustable U-shaped rod 21 engaging the hook of a rod 20 mounted in one of the levers 18, which carry the measuring-wheels *f*. (2) The wheels *h* are provided with stops 35 which can be adjusted circumferentially, so that they can be moved to bring the unworn portion of the teeth of the wheels *h* into the operative position. The stops 35 in the normal position rest against the bar 36. (3) To avoid uneven wear on the pivot of the lever 40, the cord 46 which is actuated by the levers *n* passes down through a central opening in the lever 40, so that the pull is equally distributed over the pivots 50.

Peck W 12614/1913 Sph trig

12,614. Peck, W. May 30.

Spherical-trigonometry calculators. — An instrument for solving astronomical problems for all latitudes comprises a base plane W, supported at b^1, b^2 on a stand S, and carrying planispheres L^1, L^2, Fig. 2, rotating about the pole X, movable rings B^1, B^2 graduated into hours and minutes, and a compound indicator consisting of a base-plate C^1, C^2 carrying movable arms N, O, P, Q, *d*. The base-plane W is provided at the circumference with graduated circles H^1, H^2 to show angular distances in time from the meridian M^1, M^2. The rings B^1, B^2, which may be mounted at any convenient part of the planispheres, are movable so that they can be set for the mean position of the sun for any day of the year; when so set, as the planispheres are rotated to bring any particular celestial object beneath the meridian arm P, the scales indicate the time of meridian passage. The meridian arm P is provided with a scale of latitudes, and when adjusted so that the latitude of the place coincides with the index *y*, the end Z^1 represents the horizon line on the meridian, the end Z^2 the zenith point, and the scale shows the meridian altitude of any object passing beneath it. The graduated arm Q shows declinations, and also right ascensions on scales p^1, p^2 on the planispheres. The short auxiliary arm *d*, when brought over an object set at right-angles to the ecliptic E, indicates approximately celestial latitude and longitudes. The plate C^1, C^2 is provided with curves *h*, *a* representing respectively angular distances in time from the meridian, and angular distances in degrees from the east and west points of the horizon; the arms N, O are provided with scales of geographical latitude and carry sliding indices *i*, *j*; when objects are brought to the edge G^1, G^2 of the indicator and the arms N, O are set with their points g^1, g^2 over the objects, the indices *i*, *j*, after being set to the latitude of the place, indicate respectively on the curves *h*, *a* the time before and after meridian passage when the object rises and sets, and its amplitude.

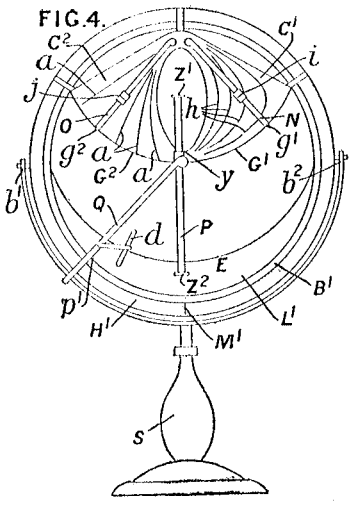

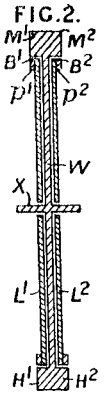

© B O B Williams Printed22/11/2023 CalcPatents Ed. 1.doc

Peichl J 5045/1879 Mean of two compass readings

5045. Imray, J., [*Peichl, J.*]. Dec. 9.

Calculating - apparatus for indicating mean of two compass readings.—Two discs are movable about an axis. Two pointers B and S of equal length are clamped the one by the screw I and the other to one of the jointed arms *g* by a screw. A string *f* passes through a hole *a*. The two arms are set at the two readings and the string gives the mean.

Abridged also in Class *Philosophical instruments.*

FIG. 4.

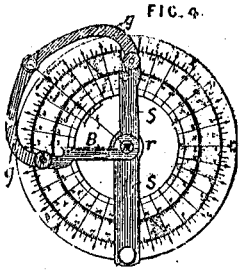

Penrose F C 1525/1876 Solve spherical triangles

1525. Penrose, F. C. April 10. [*Provisional protection only.*]

Calculating-apparatus.—An apparatus for solving spherical triangles is formed of two planes of wood or other material hinged together so as to turn about a common axis; one plane is bounded by a semicircle and the other by a segment larger than a quadrant. Fixed below the segmental plane, at right-angles to its axis, is another semicircular plane of smaller radius, which is hinged so that it may be folded. The two large planes are graduated on the curved edges into degrees, and the smaller one into divisions representing hours and minutes. A radius bar is centered so as to carry a pointer along one of the graduated edges of the large planes, and to it is connected, by a universal joint, a link graduated with a scale of chords, which can be applied to the semicircle. By means of the graduated arcs and the free link any ordinary problem in spherical trigonometry can be determined in one operation. If three sides are given, the angle will be shown on the smaller circle, or if an angle and two sides are given, the third side can be read off upon the free link or upon the graduated arc. The instrument may be used to obtain approximately either the hour angle or the azimuth, as may be desired, from a given latitude, declination, and altitude.

Perks C 10465/1885 Navigation device

10,465. Perks, C. Sept. 4.

Calculating-apparatus for problems in navigation and spherical trigonometry. A quadrant plate A is graduated round the edge B in angles and along the line C with tangent ratios, and has also a sliding plate D graduated in sines. E and F are radial arms, pivoted at G, the vertex of the angles, and graduated to represent

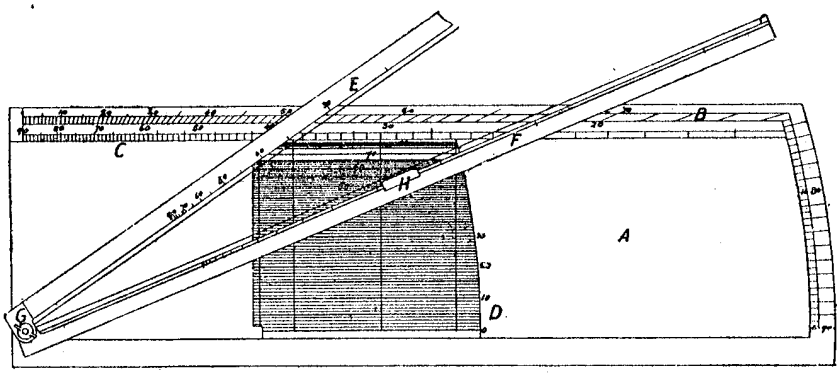

secants and cosecants in such a manner that when a cross line on D is brought to a given figure on the scale C the corresponding figure on E or F will intersect the said cross line on the line 90. E and F have wires as their reading edges and F has a sliding indicator H. In great-circle sailing, the arc joining any two places of which the latitude and longitude are given can be directly ascertained, and also the course to be steered, by a prescribed use of the instrument. Amplitudes and azimuths can be obtained and various trigonometrical calculations performed.

Perkins O J 1584/1879 Days between dates

1584. Perkins, O. J. April 22.

[*Provisional protection only.*]

Calculating-apparatus for ascertaining the number of days between two given dates. Consists of a row of successive numbers from 1 to 364 combined with a row of consecutive dates from the 1st of January to the 31st of December, in such a manner that any number may be brought opposite any date and that when No. 1 of the first row is brought opposite the starting-date of the second row, the required number will be found opposite the date to which the days are to be counted. The numbers and dates may be arranged on two cylinders, working on the same axis, or on endless bands or discs. A third row to indicate the days of the week may be added to the apparatus.

Perry J 23236/1901 Slide rule Log Log

23,236. Perry, J. Nov. 18.

Slide-rules.—The D-scale of a slide-rule of the Gravet type is replaced by a scale which is graduated so that the distance from the mark 10 to any point or number m is proportional to the logarithm of the logarithm of such number. This log-log-scale when used with the usual log-scale C allows the determination directly of the value of any number m raised to any power n. The scale D may be marked in duplicate with numbers and their reciprocals.

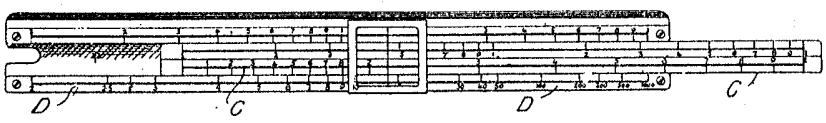

Note on Perry from a book by Thornton.

Improved "Perry" Slide Rule. About three years ago Prof. Jno. Perry, M.E., D.SC., F.R.S., of the Royal College of Science, London, designed and patented an addition to the ordinary slide rule, which has been found to be of very material advantage, being a ready method of evaluating expressions involving fractional indices, suitable, principally; in steam and gas engine calculations,. in hydraulic and electrical calculations,' &c. and this result was accomplished, by adding to the slide rule a scale, graduated in divisions proportioned to the log log of the numbers from 2 to 1000, ; and so to read off the logs of numbers to any base, and this by simply replacing what is known as the bottom or D scale of the rule. In practice this has, answered well, and, generally speaking, the idea has been very favourably commented on by professors and others who thoroughly understand the working and handling of the rule. The only objections being by some who have been accustomed to calculate with the C and D scales instead of the A and B scales, that the want of the D scale .was a drawback, and to meet this, difficulty another idea has been introduced ; and in

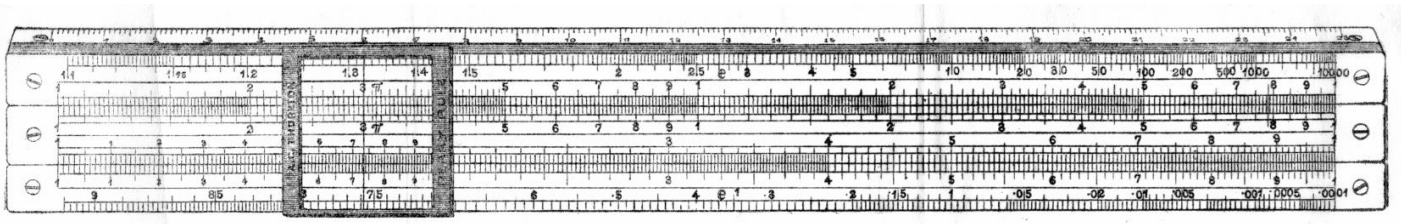

No. 6956. Prof. Perry's Patent Slide Rule—double faced with celluloid.
No. 6957. Same Rule with Pointed Cursor; Special Scale on Bevel edge and Broken line Cursor.

this new rule not only has the D scale been retained, but the log log scale has also been very much extended, rendering the rule more serviceable than the original patterns previously, sold, and this improvement as been effected by making the, rule a little wider and placing the log log scale along the top and bottom edges, as shown in the following illustrations.

Great difficulty has been experienced, not only in designing but also in dividing this log log scale to that degree of accuracy.and completeness essential so as to give satisfactory and reliable results, and as now perfected after very careful tests it has been found to quite answer the purpose :intended.

In this .improved design, as already mentioned, the, D scale is retained, while the log -log or E scale is accompanied by a log (-log) scale, or' scale of reciprocals, named E^{-1}, which addition enables numbers,

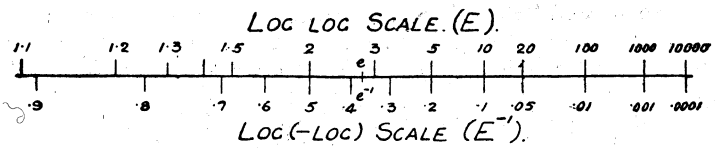

FIG. 10.

less than unity to be,given, thereby greatly extending, and practically completing, the range of the log log scale. At the same time negative indices can be directly dealt with.

,The scales are arranged to be used in conjunction with the **B** scale on the slide,,and the range of numbers is from 3TU67 to o-91, and from ı' i to **To,000,** as is shown in Fig. zo, the main divisions only being there indicated. Note that the two scales, E and E^{-1}, are mutually reciprocal. Thus, opposite 2 on the E scale **is 2**, or o'5 on the E'1 scale; or opposite o'r on the E-1 scale is -u-~Y or' io on the E scale.

Uses of the Scales E and E^{-1}.-*Theory.'* Let it be required to raise a number a to any power n. Put x for the answer. That is

$$x=a^n$$

Take logs, log x = n log a-.

Take logs again, log log x =log log a -}- log n.

It is thus seen that to find an, that is to raise a number a to a power n, the operation is - the same as that of multiplying a on scale E by n on scale B, and

Petersson A 1246/1870 Adder

1246. Collett, C. N. A., [*Petersson, A.*]. April 30. [*Provisional protection only.*]

Calculating-apparatus.—A set of keys, representing numbers from 0 to 9, are placed upon a movable horizontal axis. When one of the keys is depressed, motion is communicated through an arm to an angle arm, and to one formed like a spiral, which comes in contact with a spring, tending to move it upwards, but it is held down by a pin on the end of the angle arm, in contact with another pin fastened to the stopper. When the two pins have passed each other, the arm is moved upwards until stopped by a pin in the raised end of the key. By the passing of the pins a cog segment on the spiral arm is put in gear with a cog-wheel which imparts movement to the dial plates, which will then show which key has been depressed. The spiral arm is returned by a feather pressing upon the angle arm. When using the apparatus for addition, a combination of a cog segment and bar wheel is used by which, after adding the numerals, the tens and hundreds obtained are transferred to the next numerical series as units and tens respectively.

Pheils I F 548/1900 Local times

548. Pheils, I. F. Jan. 9.

Calculating-apparatus; indicating local times. — Over a globe or map showing the northern or southern hemisphere is arranged to turn a device similar to a spider wheel, the spokes forming meridians of longitude corresponding to those on the globe or map, and the hub forming a casing 4 on which is marked a time scale 5. By this time scale local times can be indicated or compared, the midnight–noon meridian being brought over Greenwich or over one of two places of which the times are to be compared. For greater accuracy, the central portion 14^a is fixed and an annular rack on the surrounding hub 4 drives gear which operates the hands 13, 21 to indicate minutes and seconds. A series of seven-toothed discs 7 are marked with the days of the week, one of which appears through a slot over each disc. A fixed pin 11 causes these discs to turn one tooth as they successively pass the pin in setting the indicator, thus showing the portions of the hemisphere on which, at any moment, the days are different.

FIG. I.

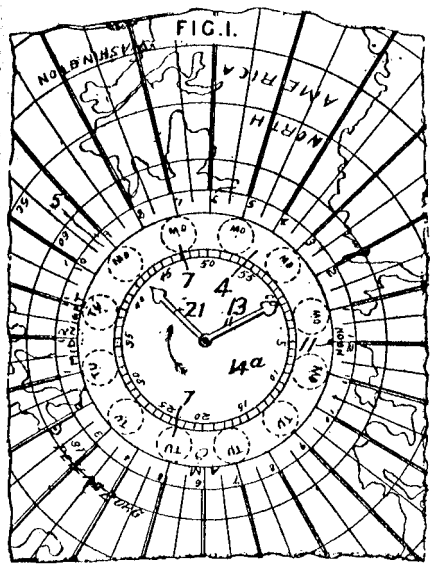

This arrangement of day discs may be replaced by a double helical scroll winding into and out of a central box.

Phillips B H 9769/1893 Adder, key driven

9769. Phillips, B. H. May 16.

Calculating-apparatus.—The invention relates to adding-machines. The numerals from 0 to 9 are marked in the finger keys *e* of levers E which are pivoted on a rod E^1, and when depressed turn a toothed wheel B^1 through a distance corresponding to each numeral. This is effected by causing teeth on the inner ends of the levers to engage with gear-wheels *d* which act on the shaft B of the wheel B^1 by pawls so that when they are depressed they turn it in one direction, but do not affect it when they are released. Above the shaft B is mounted a sliding carriage which carries a set of counting-wheels G and is urged from left to right of the operator by a spring. The key levers as they are actuated act on a lever m^1 whose end *m* moves an escapement *k* and allows the carriage to move through one step thus bringing the next higher counting-wheel into engagement with the wheel B^1. At the same time the wheel B^1 is prevented from overthrowing by a finger o^1 acted on by a pin m^4 on the lever m^1. A spring device is also used to prevent the counting-wheels from overthrowing. The operation is as follows:—When the counting-wheels have been set to zero by turning the spindle H by hand so that a groove h^1 in it engages with them, the keys are depressed in succession beginning with the key corresponding to the units digit of the first of the numbers to be added. At each actuation of a key the carriage carrying the counter is moved one place to the right so that the units, tens, hundreds, &c. wheels are successively engaged with the wheel B^1. The first number is thus registered and appears through openings f^3 in the front of the carriage. The latter is now moved to its position to the extreme left, and the process is repeated with the second number; and so on. If it be desired to add all the units digits together first, the carriage can be locked so that the units counting-wheel remains engaged with the wheel B^1 until the column has been added up. The carriage is then moved on one step so that the wheel B^1 engages the tens counting-wheels, and the tens column is then added up; and so on.

FIG. 3.

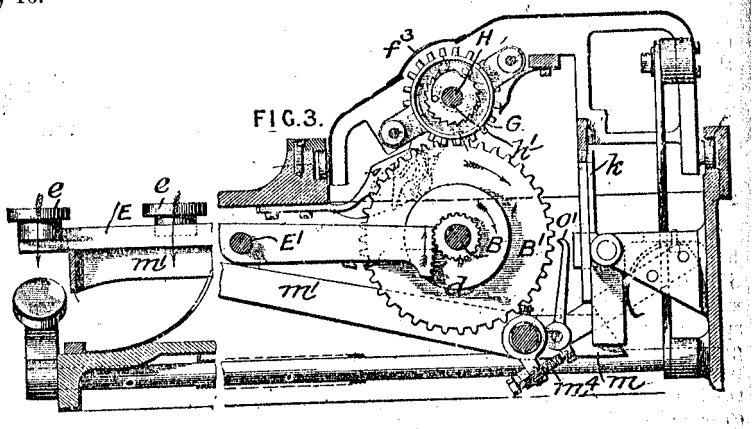

Phillips W H 8515/1894 Photo exposure slide rule

8515. Phillips, W. H. April 30.

Calculating apparatus.—Relates to a slide rule for calculating the time of exposure and diaphragm required for taking a photograph when all the determining factors are known. The factors taken into account in this case are, the intensity of the light as determined by a table for different dates and times of day, the nature of the subject, the sensitiveness of the plate, and nature of the light (whether shine, cloud, or dull). From these factors, by means of the slide rule, Fig. 1, the ratio of the time of exposure to the diaphragm number is calculated and shown on the scales C and E, so that a selection may be made of any suitable diaphragm. There are two movable slides, one D containing scales of sensitives of plate and intensity of light, the other E containing scales of nature of light and times of exposure. Of the fixed scales, B indicates the nature of the subject, and C the diaphragm diameters. A circular form of the instrument is described.

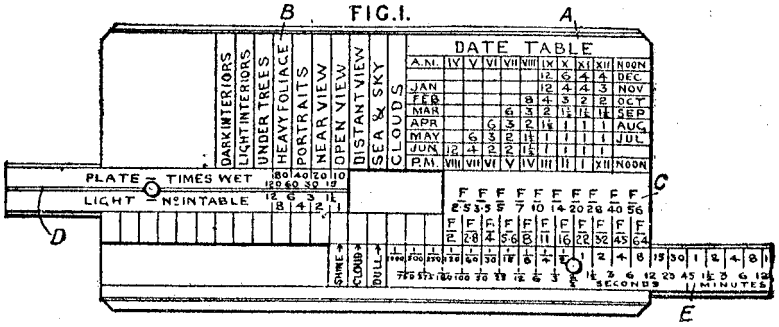

Pickworth C N 2166/1895 Slide rule for textiles

FIG.1.

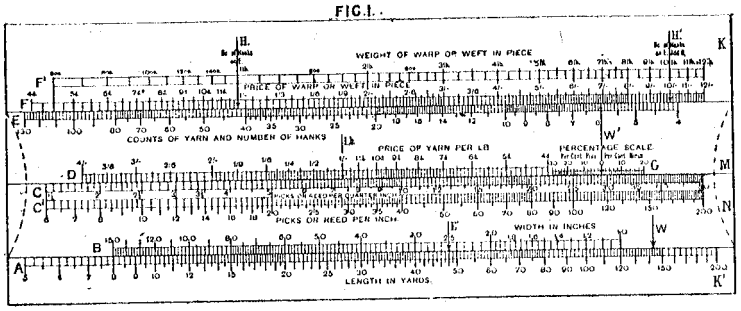

—Relates to for calculations the cost &c. of ure of woven K, K¹ is the stock, provided with two N. On these are as shown, the logarithmic lengths in yards, in inches, C, C¹ reed per inch and ¹ inch, D price per line therewith per- ales G for adding ting the percentages of cost in special cases, E counts of yarn and number of hanks, F, F¹ weight scales. Certain fiducial marks W, W¹, H, L^b are placed at the points shown for ce in obtaining results. The Specification describes various ways of using the instrument. of the rule may be modified. Thus it may be cylindrical with the scales revolving around ing parallel to the axis.

Piggott W P 10625/1845 Instrument manufacture Chrono and abr

PIGGOTT. 17th April 1845.

10,625. A grant unto PETER PIGGOTT, of Wardrobe Place, Doctors Commons, in the city of London, mathematical instrument maker, for his invention of "Certain improvements in mathematical, nautical, optical, and astronomical instruments; and also in the mode of manufacturing dials and other graduated plates"; 6 months.

A.D. 1845, April 17.—N° 10,625.

PIGGOTT, WILLIAM PETER. — "Improvements in mathe- "matical, nautical, optical, and astronomical instruments, and "in the mode of manufacturing dials and other graduated "plates."

These improvements "consist in the application of the electro- "type process" "to produce certain parts" of the above named articles.

In order to produce graduated plates such as those already named, a mould in wax is obtained of an original plate engraved "in the first style of art." From this mould any number of similar plates are obtained by the electrotype process; an electrotype mould may be used instead of a wax mould. The plates thus produced may either be silvered in the ordinary manner or "by the electrotype process."

The compass box of the mariner's compass is obtained "free "from any particles which may have a tendency to attract the "magnetic needle" by means "of the electrotype process." A mould of the required size is prepared in wax, and copper, or other suitable metal, is deposited upon it, "by means of the elec- "trotype process," until "the required strength and thickness" is obtained, "which case is afterwards to be finished in the ordi- "nary manner of making such cases, or otherwise." "I some- "times make such cases by first depositing pure copper in the "form of a sheet or block, and afterwards work the same into "the form required."

[Printed, 4*d*. No Drawings. See Repertory of Arts, vol. 7 (*enlarged series*), p. 239; London Journal (*Newton's*), vol. 27 (*conjoined series*), p. 338; and Engineers' and Architects' Journal, vol. 8, p. 358.]

Pierce G P 11995/1902 Circular adder

11,995. Pierce, G. P. May 26.

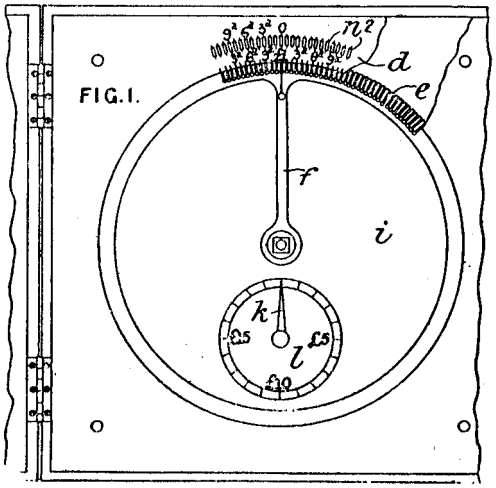

Calculating - apparatus.—A graduated ring *e*, attached to an index arm *f*, is turned under a graduated cover *d* by means of a loose arm *p*, which is hinged to its hub so that it can be engaged at the zero graduation and disengaged at any other. The complete revolutions of the ring

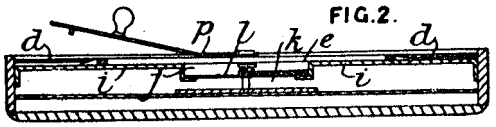

are communicated through gearing (not shown) to a hand *k* over a dial *l* in a well *j* in the false bottom *i* of the casing, which may be in two parts hinged together and each containing a ring. To facilitate multiplication, slots n^2 to receive stops are provided against the graduations on the cover and repeated additions are performed.

© B O B Williams Printed22/11/2023 CalcPatents Ed. 1.doc

Pike W H 3259/1903 Adder Printer

3259. Pike, W. H. Feb. 11.

Calculating-apparatus for adding, in which the numbers are printed in column at the same time that they are added, and in which the total can also be printed. When the "total" key is depressed, the adding-wheels are automatically re-set to zero; when the "sub-total" key is depressed, the printing operation takes place without altering the recorded total. The machine is power-driven, the hollow power-shaft 175, Fig. 13, rotating continuously and driving the shaft 176 through a friction coupling. The coupling comprises discs 180, 100, 101 pressed together by a spring 102. The discs 100 turn with the shaft 176, and the discs 101 have ears 101a which engage with recesses 172 in the enlarged end of the shaft 175. The shaft 176 is normally prevented from rotating by the engagement of a roller 110 on the latch 178 with a shoulder in the cam-disc 115. When the "starting key" 103a is depressed, the latch is lifted and the cam 115 makes one complete revolution, during which time the main shaft 992 of the machine is rocked by means of the crank-pin 109, connecting-rod 109a, and a crank on the shaft 992. The oscillation of the shaft 992 effects the printing and adding operations of the machine. Fig. 4 shows the keyboard in vertical section from front to rear. Each column of keys 201 contains

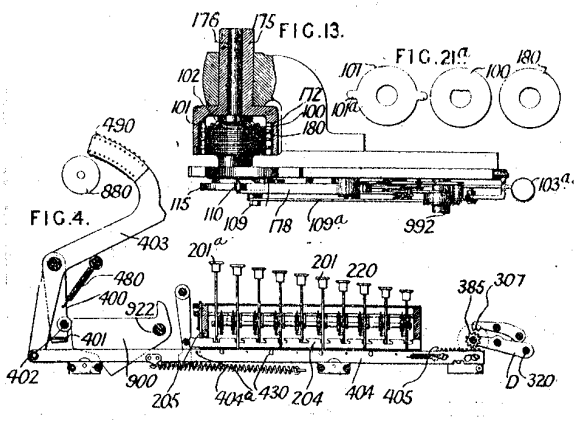

More omitted. See US 763692 and [7]

Pike W H 14979/1904 Adder £sd on type writer

14,979. Pike, W. H. July 4.

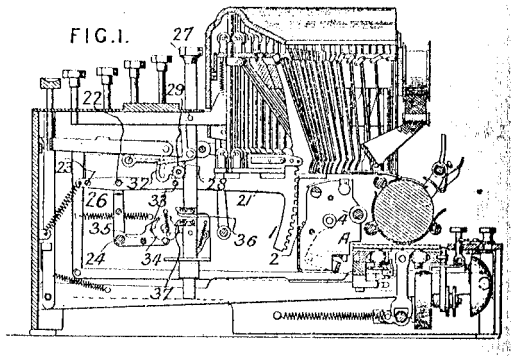

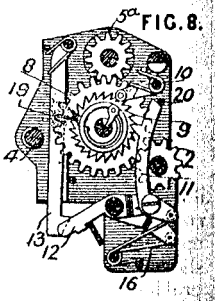

Calculating - apparatus.—An adding-machine for English monetary values is described as applied to and operated by the numeral keys of a type-writer, the counter moving with the paper carriage so as to space automatically. The counter A, Fig. 1, is adjustable on the paper carriage by means of a screw 4, and is shown in section in Fig. 8. There are registering-wheels, each with a pinion 5a, for farthings, pence, shillings, and pounds, motion being transferred from the driving-segment 1 through the train 2, 8. A roller on the detent 10 holds and adjusts the ratchet-wheel 9, the parts shown being those corresponding to one registering-wheel, and when a pin 19 of the next lower denomination forces out the spring-pressed arm 13, the bent lever 12 drops off the supporting-catch at its lower end and the spring 16

Pike Adding Machine Co. 7015/1905 Adder

7015. Justice, P. M., [*Pike Adding Machine Co.*]. April 3.

Calculating-apparatus.—In a calculating-apparatus, operated by means of a hand-lever, mechanism is provided to ensure a uniform movement of the working shaft in spite of abrupt or uneven motion of the hand-lever. The mechanism may be employed in connexion with the machine described in Specification No. 3259, A.D. 1903, to replace the power-driving mechanism. When applied to this and similar machines, adapted to record individual items, and the totals of such items, additional devices are provided to prevent the operation of either the hand-lever or of the "total" or "sub-total" key while the other is being moved. The shaft of the hand-lever 7 is mounted in line with but independently of the working shaft, and is provided with an arm 12 consisting of two parallel plates which are connected by a spring 15 and a pair of slotted links 17 to a similar arm 11 on the countershaft 2. The countershaft is connected by an arm and a link 27 to the plunger of a fixed dash-pot 25, and by an arm 20 and link 21 to an arm 19 of the working shaft. The hand-lever is provided with a full-stroke device, consisting of the notched plate 35 and spring dog 36. When completely depressed, the handle is held in that position by the toggle-levers 37, 38, which are then in alinement, the flange 45 resting on the lever 37. The handle is released by a blow from a spring hammer 39 against the tail 43 of the lever 38, on the completion of the movement of the countershaft. The hammer is released by the action of a pin 42 on the tail of a detent 41. The return of the handle is effected by a spring 29 and double spring 30, 31 both acting on the arm 12, and the return of the hammer by a pin 46 on one of the links 17. The shock of the return of the handle is absorbed by two buffer springs (not shown) which act on the stud connecting the links 17 and spring 15 to the arm 11, which stud works in a slot in the arm. The interlocking of the handle and the "total" and "sub-total" keys is effected by means of a cam 58, which is mounted on a shaft 57 and connected by arms 54, 56 and link 55 to a shaft 51 which is always operated when either key is depressed. A flange on the cam interposes itself in the path of a stop-piece 60 on one of the links 17 while the key is being depressed, and the stop-piece is brought into the path of the cam when the handle is moved.

FIG. 2.

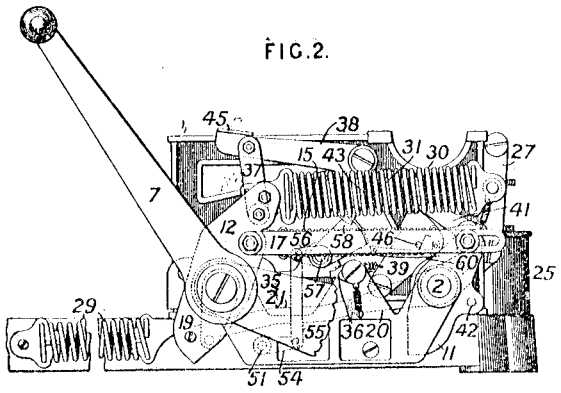

Piscicelli R T 10148/1912 Motorised pin wheel

10,148. Piscicelli, R. T. April 29, 1911, [*Convention date*].

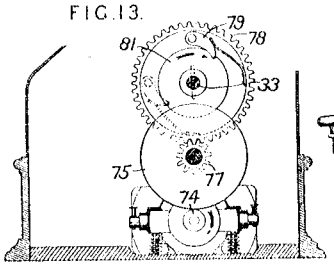

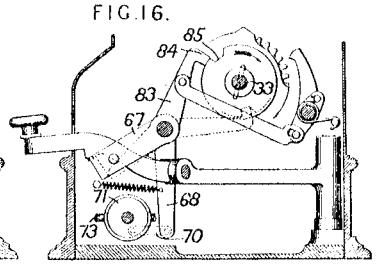

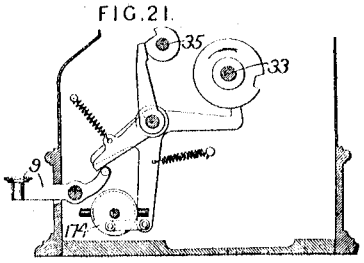

Multiplying and dividing apparatus; transfer mechanism; zeroizing-mechanism; keyboard interlocks. — Relates to an electrically - driven multiplying &c. machine of the pin-wheel and cam - disk type having the following features: (1) setting - mechanism mounted independently of the pin-wheels but engaging therewith for setting the multiplicand, after which it is disengaged from the pin-wheels; (2) a multiplicand-indicator; (3) a multiplying-key which establishes the motor circuit, maintaining the circuit till the required number of revolutions of the main shaft is shown by a multiplier-indicator, and also is adapted to move the series of actuating pin-wheels laterally to engage in turn the receiving-wheels; (4) product-indicating wheels; (5) a counter for summing the separate products actuated by a totalizing-key which establishes the motor circuit in the reverse direction and zeroizes the product and multiplier indicating-wheel; (6) a counter for indicating the number of products thus totalized; (7) transfer-mechanism; (8) zeroizing-mechanism manually actuated or driven by the main shaft of the machine; (9) various interlocking means and devices for ensuring correct co-operation of the parts of the apparatus. (1) The setting-members 14, Fig. 2, consist of partly toothed disks provided with handles 1 co-operating with scales 2. The disks actuate toothed cam-disks 22, which as usual project a number of the teeth 29 of the pin-wheels corresponding to the setting. During the differential setting of the cam-disks and pin-wheels, the latter are prevented from rotating by a toothed comb 87, Fig. 3. (2) The disks 14, which actuate the cam-disks 22, simultaneously cause the given multiplicand to be exhibited by the multiplicand indicator 17 through pinions 16. (3) The multiplying-key 5, Fig. 2, which is pivoted horizontally at 58 and vertically at 55, can be moved laterally along the horizontal slot shown, and by means of a slide 62, 64, laterally positions the series of actuating pin-wheels. When the key is in its correct lateral position, the depression thereof into a vertical notch 6 gives by means of a lever 67, 68 and link 70 a rocking movement to a contact-drum 71, thereby establishing the motor circuit through spring plungers or contacts 73. A latch 83, 84, Fig. 16, is withdrawn from a notch 85 in a disk attached to the shaft 33 and this shaft is thereupon driven by the motor through friction gearing 74, 75, Fig. 13, with which it is constantly coupled, toothed gearing 77, 78, and a pawl and notched disk 79, 81. Rotations of the shaft 33 are indicated on the multiplier-indicator 44, Fig. 3, through a single tooth 41, Fig. 3, and gearing 42, 43. (4) The product is shown on the wheels or drums 38, Fig. 2, which receive the movement of the pin-wheels 32 through receiving-wheels and pinions 36, 37.

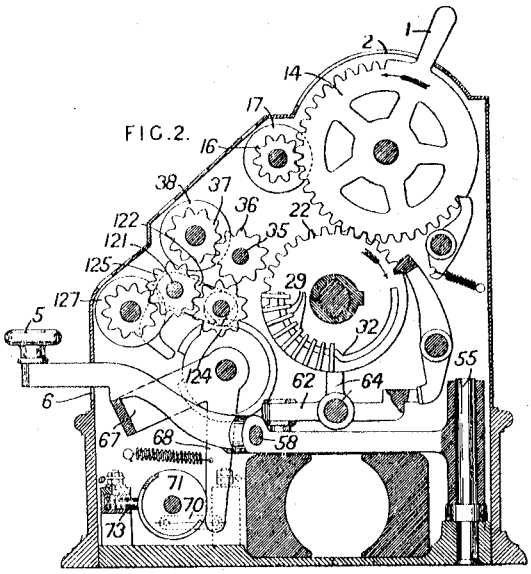

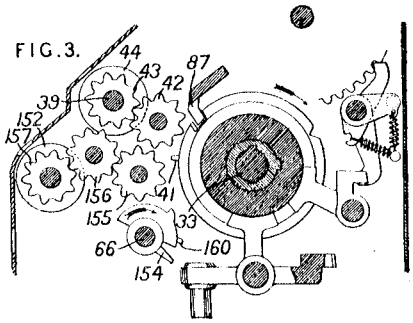

© B O B Williams Printed22/11/2023 CalcPatents Ed. 1.doc

Pivoda F 25313/1911 Circ slide rule for interest

25,313. Pivoda, F. Nov. 14, 1910, [*Convention date*].

Slide-rules for calculating interest consist of a pair of circular logarithmic scales *a*, *c*, parts of which are shown in the Figure, for days and rate of interest, respectively, running oppositely and having between them a slide *b* carrying principal and interest. The starting-point of the *a* and *c* scales are arranged to lie opposite the same numbers on the principal and interest scales in the slide *b* respectively. On setting the days opposite the principal, the required interest can be read on the scale on the slide *b* opposite the given rate of interest on the scale *c*.

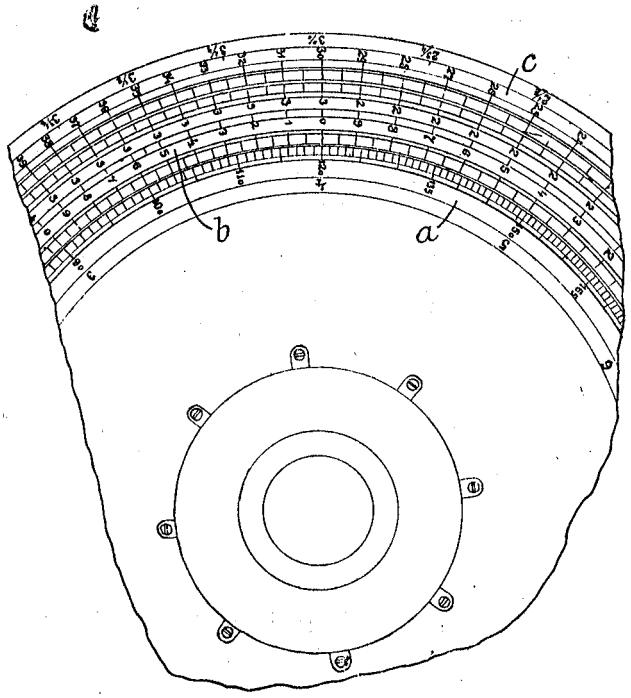

See *[8]*

THE "PRESTO" CALCULATOR

For Discounts and Interests

English Patent 25,313—1911.

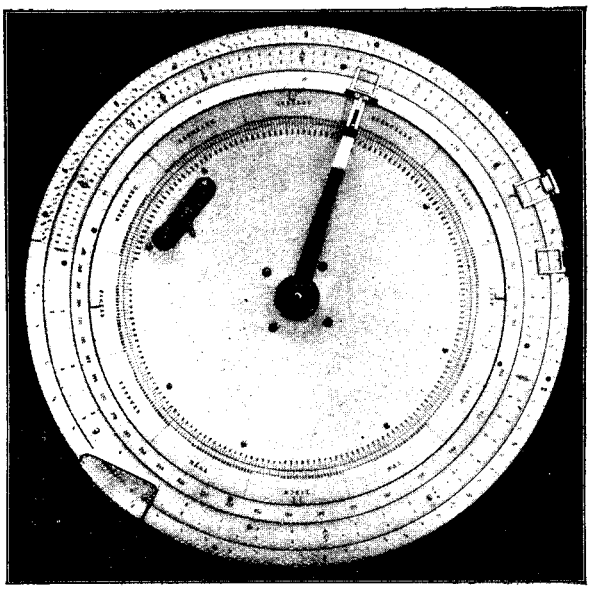

EXACT :: NOISELESS :: RELIABLE

Reckons discounts and interests three times as quickly as Tables. Results as low as 1/16 % can be read directly from the Scale without any further calculation . . . .

The "PRESTO" Calculator has been in constant use in two large banks for the past two years with highly satisfactory results . . .

The Patentee is willing to consider applications for the purchase of patent rights and for the appointment of sales agents for one or more countries.

Full particulars may be obtained from

DR RUDOLF TAUSSIG

8 Wuerthgasse, Wien, XIX.

vii

Pivoda F 25314/1911 Micrometer attachment for slide rule

25,314. Pivoda, F. Nov. 14.

Slide-rules.—For reading clearly the fractional parts of the divisions of slide-rules and the like, a micrometer attachment is provided, consisting of feelers *d* which can be brought into contact with inclines formed accurately one to each division of the scale, and all of the same height, the feeler having an incline so as to be engaged by a sliding key *b* when required to be thrown into contact with the scale. The movement of the slide *b* gives the reading by means of a thread guided over a pulley carried thereby, and over other fixed pulleys, as shown in Fig. 2, arranged beside the four slides b^1, b^2, b^3, b^4; the thread being wound on the spindle of a pointer moving over a dial.

FIG.3. FIG.2.

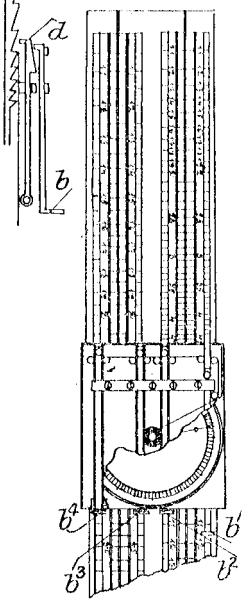

Pivoda F 1782/1914 Days between dates, Add subtract discs

1782. Pivoda, F. Jan. 22, 1913, [*Convention date*].

Adding and subtracting apparatus.—An instrument for ascertaining the number of days between any two dates consists of a rotatable ring B divided into 184 parts, consecutively numbered and disposed between inner and outer disks A, C graduated in months and days, six months being on one disk and six on the other. The months are divided at the end of February; by turning the disk C with respect to the disk A to the extent of one day, the instrument can be set to make the reckoning through the end of February correspond with ordinary and leap years. In a modification, suitable for bi-annual estimations of interest, the months are each assumed to contain 30 days, and the inner and outer scales are relatively fixed.

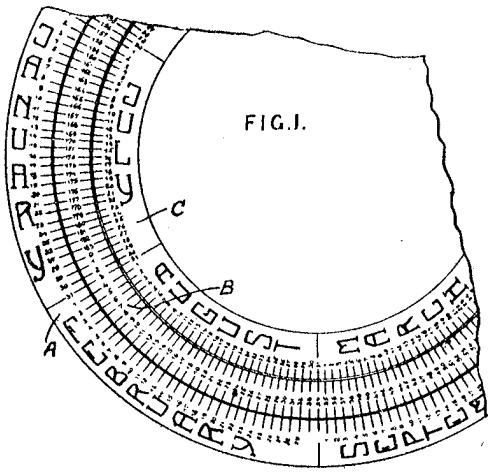

Plechawski E 139/1890 Universal time indicator

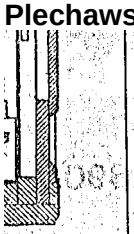

elates to a
amount of
he same on
also upon
set" from
slides C¹

72

139. Plechawski, E. Jan. 3.

Calculating-apparatus.—Relates to universal time indicators. A map of the world on Mercator's projection is mounted as an endless band on rollers *d* in a frame *f*. Along the bottom of the frame is marked a time scale numbered in civil and astronomical hours. In the centre of the frame bottom is an aperture *b*, through which is visible a second scale of hours on an endless band borne upon the same rollers as the map. This hour band and map may be moved relatively or together. The evening hours are distinguished by plates of dark-coloured glass *h* occupying the side quarters of the frame.

(*For Drawing see next page.*)

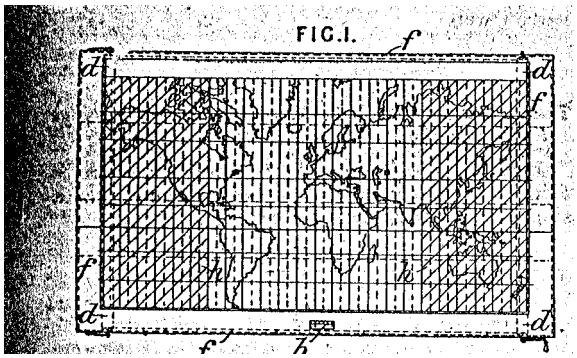

Pletnik L 9501/1910 Mult Tab calc cylinders

9501. Pletnik, I. April 19.

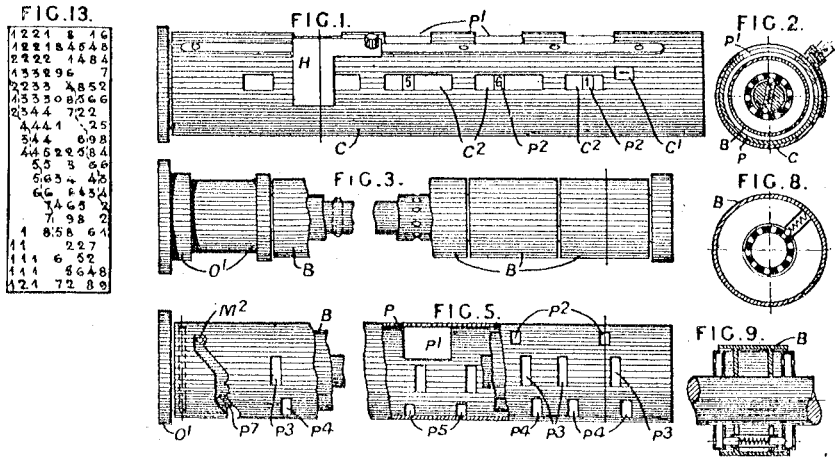

Multiplying and dividing apparatus consists of a denominational series of rotatable numeral-cylinders B, Fig. 3, and inner and outer perforated rotatable cylindrical covers or sleeves P, C, Figs. 1, 2, and 5. Each of the cylinders B bears a special arrangement of numerals in which the 'units' and 'tens' digits of the products of a central vertical column of arguments and the digits 1 to 9 are placed, respectively, in a stepped formation, as shown in Fig. 13, on the right and left of the central column. Partial products and carried figures are mentally added. Large openings P^1 in the covers P, C allow the series of cylinders B to be manually rotated so as to cause the required multiplicand to register with openings P^2 in the cover P; the cover P together with the cylinders is then rotated by means of the rim O^1, Fig. 5, so as to expose the numeral 1, of a series of digits 1 to 9 on the cover P, through an aperture C^1 in the cover C. The multiplicand will then appear through the elongated apertures C^2. If the rim is turned so as to expose the digits 2, 3 . . . 9 in succession through the aperture C^1, products of the given multiplicand and these digits, which are normally in register with the staggered pairs of apertures P^3, P^4, P^5 . . . in the cover P, will appear in the apertures C^2. Relative axial movement takes place between the two covers owing to the pin and cam-slot device M^2, P^7. An axially-movable slide H is provided to cut off those of the apertures C^2 which are not required. Ratchet-devices, Figs. 2, 8, and 9, are provided in order to retain the cylinders B in position. Several modifications are described; in one, a single slot replaces the apertures C^2, the spaces between the pairs of apertures P^3, P^4 being coloured; in others, flat slides or bands can be used instead of the rotatable cylinders and sleeves.

Plumb F 763/1893 Lace test calculator

763. Plumb, F. Jan. 13.

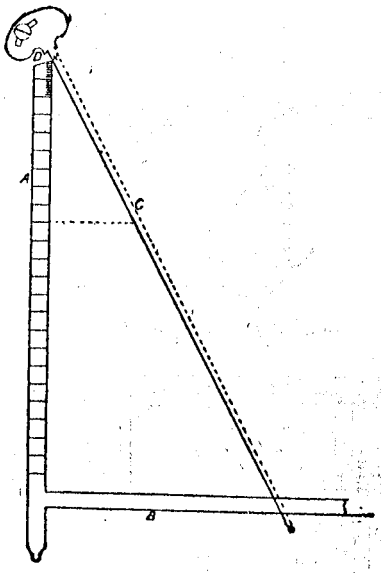

Calculating-apparatus for lace testing. An instrument, rule, or gauge, for measuring and testing the quality of lace, made on Lever's or other machines, is constructed as shown, the number of motions being indicated on the scale A and the number of inches to the rack (*i.e.*, 1920 motions) on the scale B. As an example, a lace pattern, measuring $1\frac{3}{4}$ inches and containing 144 motions, is placed opposite the number 144 on the scale A, and the pointer C is caused to touch the point D and the outer edge of the pattern, when the number registered on the scale B is nearly 24, showing the lace to be nearly 24 inches to the rack. A strip parallel to B may be graduated in inches &c. and caused to slide on A for the purpose of measuring the lace and keeping it at right-angles to A.

Pollen & Isherwood 13082/1906 Trig calc for ships

A.D. 1906.

13,082. Pollen, A. H., and **Isherwood, H.** June 6

Plane - trigonometry calculators.—Relates to mechanical means for predetermining the relative positions of two ships Y, Z when the factors known are, the initial range 1, the speed v of the observing ship Y, the course A of the target Z, its initial bearing B and its speed u. Fig. 2 shows diagrammatically how by impressing on both ships a velocity equal and opposite to that of the observing ship, the position Z^2 is determined which the target occupies after unit of time and Fig. 3 shows the apparatus for solving the problem. The model Y, Fig. 3, points along the line 19, 20 and the target model Z, which always points along the arm 9, is carried on a nut 6 traversed along the arm 5 on which it indicates the range 7, the arm being set to the bearing B. The arm 9 is set over the scale to the course A and the nut is set along this arm to the speed u, while an arm 13 kept parallel to the line 19, 20 by parallel linkages 150 sets off between the nut on the arm 9 and the stud 14 the speed v. The stud 14 gives the position Z^2, and the other pivots of the arms of a lazy-tongs linkage 17 pivoted at Z, 14 give the subsequent positions Z^3, Z^4. A pivoted scale 18 or arcuate lines on a glass cover are used to measure the range.

FIG.3.

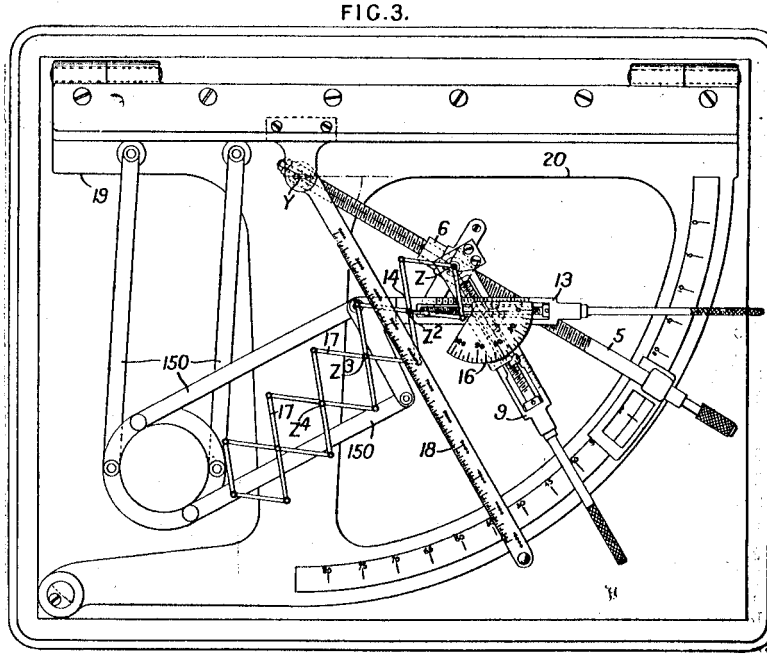

FIG.2.

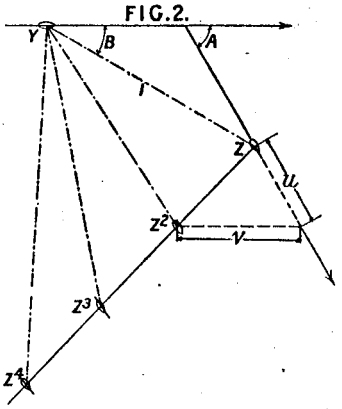

678

Pollen & Isherwood 14305/1906 Ship target

14,305. Pollen, A. H., and **Isherwood, H.** June 22.

FIG.2.

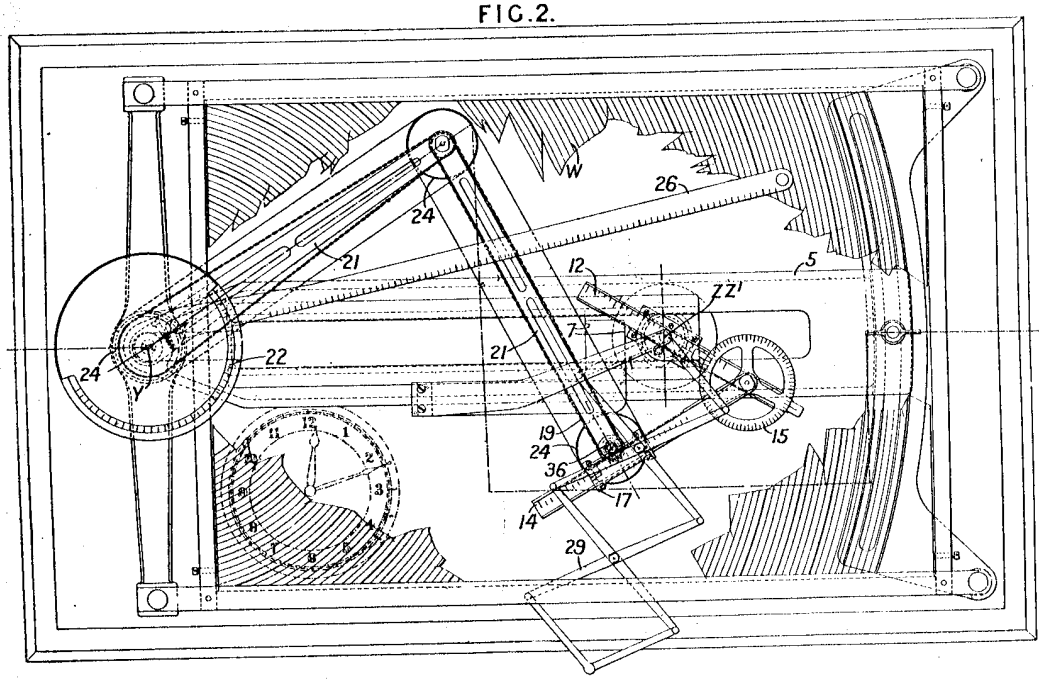

Plane-trigonometry calculators.—Relates to improvements in apparatus described in Specification 13,082/06 for ascertaining subsequent ranges of a distant ship when there are known its preliminary range, its speed, course and bearing and the speed of the observing ship. The model Y of the observing ship is carried on a graduated disk 22 and points to zero, this disk being set to the bearing of the distant ship with respect to the base bar 5 on which a slide 7 sets out the range. The presentation of the distant ship is given by two points ZZ¹ moving together and directly over one another, but spaced apart so that the bar 14, for instance, on which the speed of the ship Y is set out may, if need be, pass through the point Z. The speed of the target is set out on an arm 12 passing through the point Z and its course is set with respect to a graduated circle 15 carried on the arm 14. The arm 14 is kept parallel to the direction of the ship Y by means of three pulleys 24, as shown, on arms 21 driven by inextensible belting, the arms also serving to carry the chain drive 19 for the pinion 36 which moves the slide 17 along the arm 14 to the proper speed. The lazy-tongs 29 is arranged as shown and to enable a reading to be taken on the graduated glass cover W, although the lazy-tong projects outside on first setting, the arm 5 carrying all the linkages is adapted to pivot round the point Y. A scale 26 is provided as before.

Pollen & Isherwood 1562/1912 Artillery slide rule

1562. Pollen, A. H., and **Isherwood, H.** Jan. 19.

FIG.4.

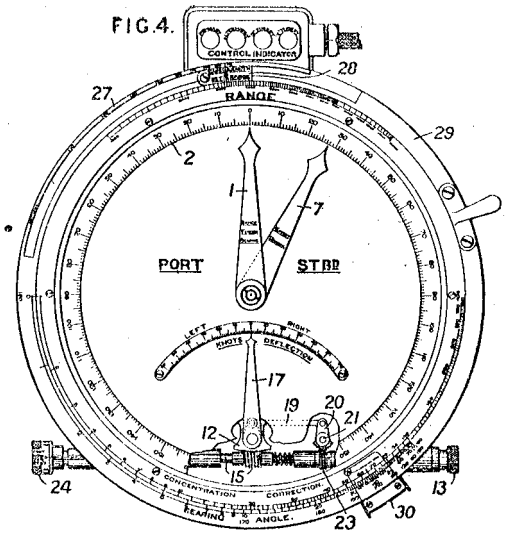

Slide-rules.—Relates to training indicators, for gun turrets, of the kind wherein a pointer in the turret is actuated from a distant fire-control station and indicates the direction or bearing of the selected target. According to the invention, a second pointer co-axial with the first is driven by the turret and, by its coincidence with the first pointer, denotes that the turret is trained correctly. The apparatus includes a circular slide-rule for calculating the correction to be applied between the turret pointer and the turret to eliminate the error due to the distance between the turret and the fire-control station, in order that the gun-sights and range-finder may be directed on the same target. The slide-rule is shown in Fig. 4, and consists of a movable ring 29 and two cursors 28, 30. The cursor 28 is set to the distance between the turret and the fire-control station on a scale 27, and the ring 29 is moved until the second pointer on the cursor 28 reads against the range-graduation on the fixed range scale. The cursor 30 is then moved to the reading on the ' bearing angle ' scale on the ring 29 corresponding to the bearing of the target at the fire-control station. The ' concentration ' correction angle is then read off the fixed scale beneath the cursor 30.

Poliakoff J 18358/1900 Re photographic exposure

18,358. Poliakoff, J. Oct. 15.

Calculating-apparatus. — The apparatus is f measuring the intensity of light or comparing with a standard, or for calculating exposures. I the form shown in Fig. 3 a selenium cell *a* exposed to the light by raising a shutter *j*. Ov the cell is a sensitized plate *w* which, as it darken cuts off the light from the cell and so renders non-conducting. From the battery *o* run tw parallel circuits, one *m*, *n*, *i*, *k*, *l* including solenoid *h*, and cell *a*, and the other *m*, *s*, *r*, *q*, *t*, *l*, which is of much less resistance, includi the electromagnet *b* of a chronographic recordin apparatus 4, 8. When light first passes, on raisi the shutter *j*, the solenoid *h* attracts its armatu and moves the lever *q*, so as to break circuit at for the lower resistance circuit and throw t whole force of the battery into the higher. T screw *p* is adjustable on a scale 30 according to t intensity of the light under examination. T magnet *b* thus releases its armature *d*, and allo the pen 4 to rest upon the cylinder 8 and trace line, until the darkening of the plate *w* reduces t current in the solenoid *h* sufficiently to cause t arm *q* to return to contact with the screw *p*. place of the recorder, a photographic shutt Figs. 4 and 5, may be employed, to which t shutter *j* is connected. On operating the shutte by the ball 3 in the usual way, the arm *f* catc under the hook *c* on the armature *d*, and t shutter is held open until the magnet *b* is energized. The apparatus may be somew

FIG.3.

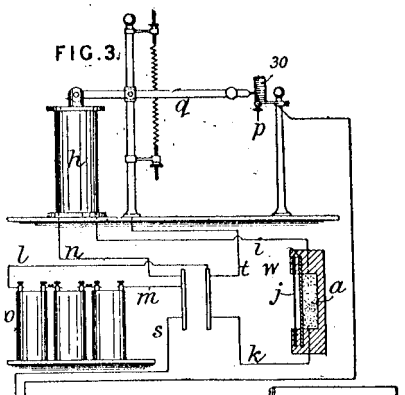

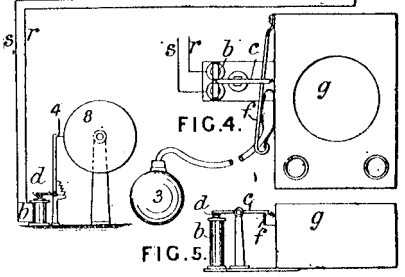

FIG.4.

FIG.5.

modified ; for example, duplex cells, solenoids, circuits acting differentially may be employed comparing two lights. The light striking the may be rendered rapidly intermittent by a ro apertured shutter.

© B O B Williams Printed22/11/2023 CalcPatents Ed. 1.doc

Poor C L 123989/1918 Circ slide rule astronomic

123,989. Poor, C. L. Jan. 10, 1918, [*Convention date*].

Slide-rules of the circular type for calculating the zenith-distance in the celestial spherical triangle when the latitude, declination, and hour-angle are known, from the formula:—Havs. Z = Cos L Cos D Havs. H + Havs. L ± D where the symbols have their usual significance, and also the azimuth from the declination, hour angle, and altitude, by the formula:—Sin A = Sin H. Cos D. Sec h. Upon a plane circular base 10 supported upon legs 14, are a number of concentric scales, graduated according to the logarithmic values of the following functions:—Sines of azimuth, hour angle, and altitude, 60, haversines of hour angle, 35, 36, 37, cosines of declination and latitude, 30, haversines of zenith distance as altitude, 50. In addition there is an evenly-divided scale 41 for reading logarithms against a logarithmically-divided scale 40 of natural numbers. The scales start and terminate upon the radial line 27, and the calculations are made with the aid of adjustable radial lines 25, 26, of which the line 26 is carried by a transparent disk 11 mounted on a central pivot 15, and the line 26 by a transparent arm 17, 12 on a central pivot 19. Means 21, 22, 23 for clamping the disk and arm together in desired relative positions are provided.

FIG.1.

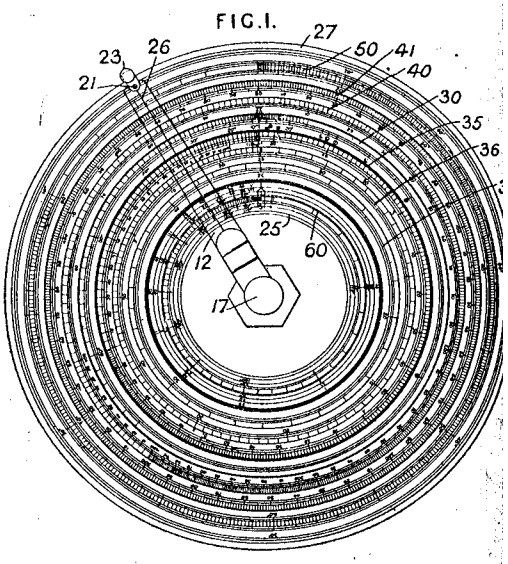

FIG.2.

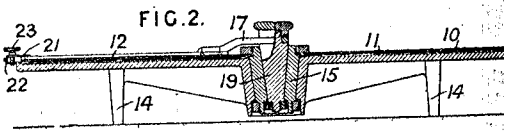

Porter H 334/1878 Wage calculator using cylindrical tables

334. Porter, H. Jan. 25.

[*Provisional protection only.*]

Calculating-apparatus specially adapted for wages, but also applicable to rates of interest, prices of goods, and like purposes. One or more cylinders slotted lengthwise revolve inside a similar fixed cylinder, and are actuated by pinions gearing with segmental wheels operated by arms passing through slots in a base-plate. On the edges of these slots the rates per week are placed. The hours are marked on the outer fixed cylinder, and the pounds, shillings, and pence table is affixed to the inner one.

Porter H 334/1878 Tabular calculator cylinder Full

334. Porter, H. Jan. 25.

[*Provisional protection only.*]

Calculating-apparatus specially adapted for wages, but also applicable to rates of interest, prices of goods, and like purposes. One or more cylinders slotted lengthwise revolve inside a similar fixed cylinder, and are actuated by pinions gearing with segmental wheels operated by arms passing through slots in a base-plate. On the edges of these slots the rates per week are placed. The hours are marked on the outer fixed cylinder, and the pounds, shillings, and pence table is affixed to the inner one.

Text of full patent OCR No drawing

The object of my Invention is to provide a simple and efficient machine specially adapted for calculating wages, but capable of being used as a ready reckoner generally for calculating rates of interest, prices of goods, and the like purposes.

I will describe my Invention specially as applied to machines for calculating workmen's wages.

According to one arrangement I provide an outer cylinder or casing secured to a suitable box or bed ; this cylinder has a slot way cut lengthwise in same, and on one or both sides of the aperture of the slot way I mark the hours and half hours and quarter hours if necessary.

Inside the fixed cylinder aforesaid I provide another cylinder with slot way like that in the fixed cylinder and of or about the same size thereof, and on or to this cylinder I attach a pounds, shillings and pence table; this cylinder is provided with boss at bottom passing through the, base plate, and to the boss a pinion is securely keyed ; the said pinion is in gear with an internal toothed wheel, which latter is provided with a handle or arm.

There is another and inner cylinder mounted' on a spindle at bottom passing through the boss on which the other cylinder is mounted and resting on cross bar of the hase. This spindle also carries a pinion actuated by internal segmental wheel similar to that into which the other pinion gears, and this wheel is also provided with a handle or arm as in the previous case.

There may be additional cylinders if required, all constructed and acting substantially in the same manner; these might be necessary where complicated calculations or large number of rates had to be calculated. To the inner cylinder the pounds, shillings, and pence table is also affixed, and when at work the arms of these cylinders may be brought over one another, and thus bringing the slot ways on the two cylinders even or opposite one another,

The arms on the segmental wheels pass through slots formed in the base, and on the edges of the slots the rates per week are placed.

The operation is as follows :-Supposing it is required to find, the value of fifty-four hours at eighteen shillings per week, set one of the arms at three shillings per day, when opposite fifty-four hours will be found indicated eighteen shillings, the sum required. Again, suppose the value to be sixty hours at thirty-six shillings per week, bring one (the upper) arm to the end of slot and the other to, thirty-six, and opposite sixty the required sum is found.

According to another arrangement, I fit the casing with only one inner cylinder, in which case the number of rates will be reduced, and one segmental wheel will be sufficient ; also by dispensing with the half hours between each hour on the stationary board the space will be reduced by one half, therefore .one. cylinder will act in place of two ; in all cases the $^{1}/_{4,}$ $'/_{2,}$ or $^{3}/_{4}$ .will be at the top, so that it can be added to the total. By. this latter arrangement the cost of the machine is considerably reduced.

Postans A J 24868/1902 Adder

24,868. Postans, A. J. Nov. 12.

Calculating - apparatus. —In an adding-machine, the ratchet *k* of the units drum 1 of the registering-drums 1, 2, 3 is actuated by a pawl *j* carried by an arm *i* on a pinion *h*, which is rotated by a toothed quadrant *g*, operated by the engagement of the hooked ends of the levers *s* of the finger keys *t* with bars *p* mounted on T-ended levers *n*, *n*¹, of which the lever *n* is an arm of the quadrant lever *g*. To render the stroke of all the finger keys *t* equal, the bars *p* are stepped, and the lower row of levers *s*, which have to give the longer travel to the quadrant *g*, engage the bars *p* at a greater distance from the axis than the upper levers. Thus the depression of a finger key *t* causes the quadrant *g* to travel through an arc, the length of which is dependent on the number on the finger key depressed, and the pawl *j* to travel over a corresponding number of teeth on the ratchet-wheel *k*. On releasing the finger key, the spring *v* returns the quadrant *g* to its normal position, thereby moving the pinion *h*, the lever *i*, and the pawl *j* in the reverse direction, turning the ratchet *k* and the drum *l* the number of teeth or spaces represented by the number on the key depressed. The hooks on the levers *s* prevent the

FIG. 5.

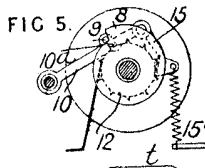

FIG. 4.

FIG. 3.

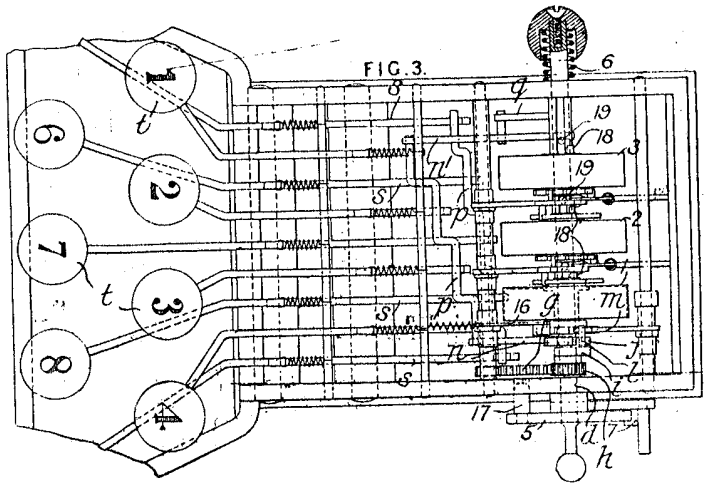

More text omitted Picture courtesy Bob Otnes



Postans A J 12057& 12058/1908 Add print

12,057. Postans, A. J. June 3.

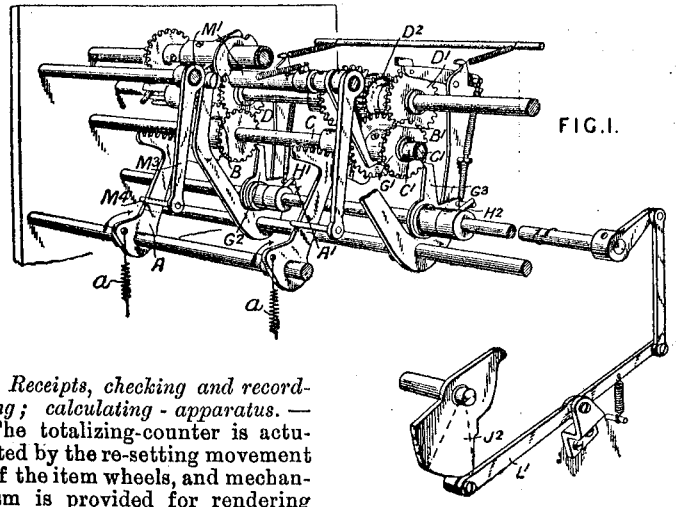

FIG.1.

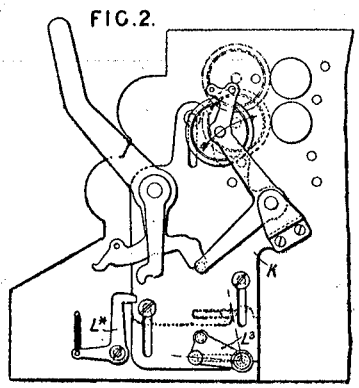

FIG.2.

Receipts, checking and recording; calculating - apparatus. — The totalizing-counter is actuated by the re-setting movement of the item wheels, and mechanism is provided for rendering such movements successive in order to prevent faulty transfer on the former during the operation. The invention is described for printing - wheels, the mechanism employed being similar to that described in Specification No. 12,332, A.D. 1907. The item-wheels are on nested sleeves C, C^1 set by the key-operated quadrants A, A^1, all the parts being held locked against the zeroizing-springs *a* by the detents G^2, G^3. The item-setting pinions B, B^1 drive the totalizing-wheels through pinions D, D^1 with ratchet pawls and pin-wheels D^2. The lower denomination gearing is held from operation, until the higher has been actuated, by means of sleeves M^1, carrying pawls engaging the detent wheels G^1, and arms M^3 with pins M^4 to engage the next higher quadrants A, which release the wheels G^1 on arriving at their normal position. By this means the higher wheels of the totalizing-counter have been set before any transfer that may be necessary takes place from the lower wheels. The action is further ensured by the pins H^1, H^2 for releasing the detent pawls G^2, G^3 being arranged in echelon so as to release the highest denomination first. The pin shaft is rocked by the lever L^1 operated by a cam J^2 connected with the printing - lever. The printing-mechanism is carried in a sliding plate K, which can be moved so as to present the platen to either the item or the total recording-wheels, by releasing the catch L^* and operating the arm L^3.

12,058. Postans, A. J. June 3.

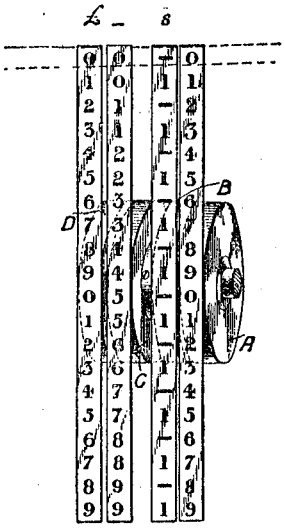

Receipts, checking and recording; calculating-apparatus.—In apparatus intended preferably for use in indicating or recording the various items registered, the tens-of-shillings wheel B is fixed to the units-of-pounds wheel C and rotates therewith. Consequently, the wheel B is marked with the numeral 1 alternating with a blank, and the wheel C with each of the numerals from 0 to 9 repeated twice. In the Figure, the numerals on the wheels are shown as developed in vertical columns for the sake of clearness, A being the units-of-shillings wheel, between which and the wheel B a transfer arrangement is employed, and D the tens-of-pounds wheel. The wheels A, D bear the numerals 0 to 9 repeated in order. For use in printing a record, the numerals on the wheels are, as usual, cut in reverse.

Pothig & Renner 29377/1906 Multiplier Thomas type

29,377. Boult, A. J., [*Pöthig, R.*, and *Renner, P.*]. Dec. 24.

Calculating-apparatus.—Relates to multiplying-machines of the "Thomas" type, the improvements being in the arrangement of the numeral-wheels and quotient-wheels, in the reversing-mechanism, and in the provision of two extra numeral-wheels actuated only by transfer from the lower wheels. Fig. 1 shows the machine with the hinged table A thrown back, and Fig. 4 shows a section with the table in place. The numeral-wheels 15 bear the double set of figures 9....0....9 in two colours, and their shafts 14 are mounted transversely and parallel to the table A. Each setting-pinion shaft 8 carries two toothed wheels 16, 17, the latter of which gears with a wheel 19 carrying another toothed wheel 20 on a pin 21. The sliding sleeve 23 on each shaft 14 carries a pinion 18 which gears with either of the pinions 16, 20 forming the reversing-gear. A cross-bar engages all the sleeves 23, and is shifted by a single lever to reverse the machine. Each transfer tooth 47 is carried by a sleeve 45 slidable on the shaft 4 of the stepped controlling-roller 3. When a ten is to be transferred, a projection 43 on the numeral-wheel 15 rocks a lever 44, thus sliding the sleeve 45 and transfer tooth 47 into position. The continued rotation of the shaft 4 causes the tooth 47 to effect the transfer. The sleeve 45 is held in either position by a double spring-detent 54 engaging either of the grooves 48. A cam-surface 51 on the sleeve 45 engages with a fixed pin 52 to re-set the sleeve. The quotient-wheels 39 are mounted with toothed wheels 35 on shafts 34 parallel to the shafts 14. A tooth 40 on the extreme shaft 4 operates the quotient-wheels through the gear 41, 42. The numeral-wheels and quotient-wheels are positioned by detents 38 holding the toothed wheels 36, 37. The numeral-wheels have flanges projecting through the casing A to enable the wheels to be turned by hand. The resetting-means for the numeral-wheels and quotient-wheels consists of the usual bars 27, 28, Figs. 4 and 5, and cams 31, 32, on the counter spindle, the bars being slidable in carriers 33 suspended from the table A. Two extra numeral-wheels are provided and remain on the left of the extreme left stepped roller 3 when the table A is in its extreme right-hand position, and thus serve only for receiving transferred numbers.

FIG.4.

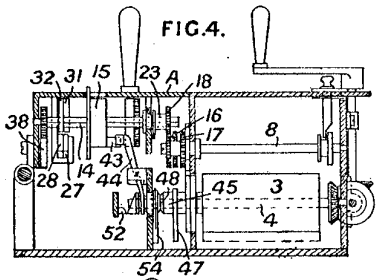

FIG.5.

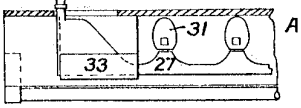

FIG.1.

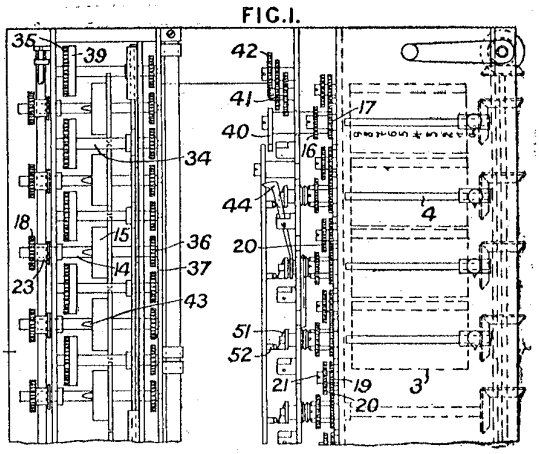

Pottin H 3313/1883 Add print register

3313. Imray, J., [*Pottin, H.*]. July 4.

Receipts, checking &c.—Registering-apparatus for tills. The objects are to exhibit the amount to be paid to the cashier and the customer; to print it on the bill and on a recording-tape; to total the payments, return the figures to zero, and sound a bell. On depressing one of the nine numbered keys *a* its hook *b*, Figs. 1 and 8, engages with the arc *d* and causes it to oscillate on its bearing (against the pressure of a spring) and release the detent *j* and allow the toothed sector B to fall until it is stopped by a pin *g* in the depressed key *a*. In falling, the sector B turns the wheel C and drum A through a distance corresponding to the number of the key pressed. On the drum A the amount corresponding to the key comes under the openings G and f^1, which latter is normally covered by a screen. On the drum A is fixed a bevel-wheel which gears with a pinion *i*, each having 10 teeth (except in the gear for pence in which it has 12 teeth). The pinion *i* is geared with the wheel when a wiper *k* on the shaft E, moved by an external hand-lever, acts on the arm *l* of the sector B and raises it to zero. Each of the totalizing spindles D carries a pinion *m* pressed by a spring *n* in a barrel *o* and held by a stop *p*. On the spindle D is also a cam *r* which acts on the spring lever *q*, which carries the stop *p* and lets the latter escape

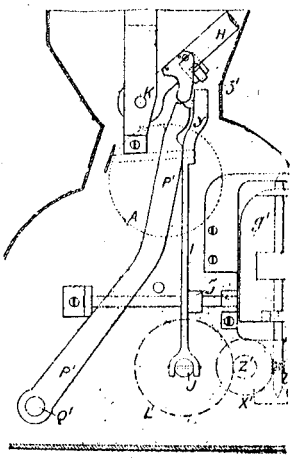

a detent *s* on the pinion *m*, and thus carries the movement to the barrel of the next denomination. The toothed wheel F on the spindle D has 10 times as many teeth as the pinion *m*, except in

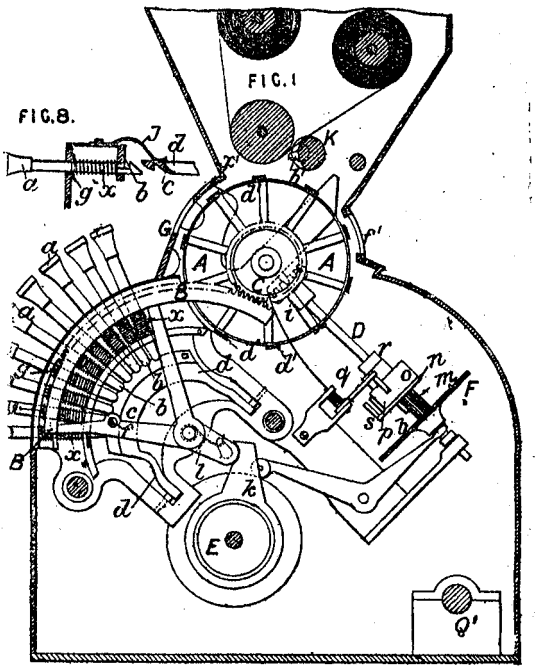

carrying pence to shillings, when it has 12 times as many. The pinion *m* is cut away to leave the wheel F free while the bevel-wheels at *i* are in gear. If the figures shown at G are correct the operator moves a lever H, Fig. 2. A roller pressing on an inclined surface on a lever *y* draws forward the cam shaft J and brings the cam in position to act on the totalizer and return the sectors to zero. The ascending sectors move back the arc *d* and disengage the keys *a*, which are returned by springs *x*. By the same movement of the lever H the customer's bill (having been slid through the opening x^1) is printed, as studs b^1 on the axis K engage in hooks and draw down the printing roller upon needles representing the figures at d^1 which pierce both the bill and the recording tape. The same movement also lifts a screen from the opening f^1 and exhibits the figures to the customer. A lever on the axis Q^1 is now moved, and, through an attached wheel, actuates a pinion on the cam shaft E and returns the sectors B to zero, actuating the totalizers (the bevel-wheels being then in gear), and sounds a bell. If the operator sees the figures are wrong, he can, by pulling the lever on the axis Q before moving the lever H, return the apparatus to zero without actuating the totalizers, the lever p^1 at the same time locking the lever H until the action is complete. The movement of the cam shaft E is regulated by a fly g^1.

Abridged also in Class *Shop &c. accessories.*

See [7] says first machine to use lever-pull

Powers Accounting Machine Co 26896/1913 Punch card

26,896. Powers, J., and **Powers' Accounting Machine Co.** Nov. 22.

Adding-apparatus; statistical machines.—Relates to power-driven machines for printing statistics from perforated record-cards. The printing and adding parts are adaptations of the machine described in Specification 854/04. The cards are fed singly between perforated plates with which coact several series of pins, of which those that are in register with the card holes raise stops for the differential sectors of the adding and printing mechanisms. The cards C, Fig. 5, are fed from a hopper 1*h*, Fig. 3, by a stepped plate 4*c* which is reciprocated by a lever 4*i* connected to a slide rod 4*f* operated by a roller 4*h* and a cam on the main shaft 3. A series of intergeared feed-rollers 4*k*, 4*l* . . . 4*u* passes each card across the tabulator pin-box, where it is momentarily arrested, and thence to a receiving-bin 1*r*.

Differential mechanism.—The pin-box 5*a*, Fig. 6, which is vertically reciprocated by a roller 5*c* and a grooved cam 3*e*, carries several series of nine pins 5*h*, one series for eac column. The rise of the pin-box allow pins in register with the holes in a car between the plates 1*m*, 1*n*) to raise thei rods 71, the remainder protruding fro bottom of the pin-box against the act springs 5*j*. There are no pins and rods 1 9's, as if no pin is raised, the tabulating swings to its full extent. The rods pass u through a guide-grid 13 and terminate in arranged arcuately to engage the sector 7*k*. The tabulating-mechanism, Fig. 10, is arranged to print and add the data o card columns, is generally similar to th scribed in the above-mentioned Specific Each element comprises a type sector 7*l* nected by pin and slot 7H and a spring a gear sector 7*e* actuating the counter-wh The action is derived from a rock-sha oscillated from the main shaft 3 by me a cam-rocked lever 3*u*, Fig. 3, link 3*z*

shioned arms 3E. The rock-shaft carries a tor 3I actuating, by means of a pin and slot and link 7*v*, a plate 7*r* to which the sector 7A connected by a spring 7*u*. Each group of elements is supplemented by one or more non-tabulating sectors 7*aa* serving to register and print the extra digits arising in totalizing; they are actuated by the transfer mechanism.

FIG. 6.

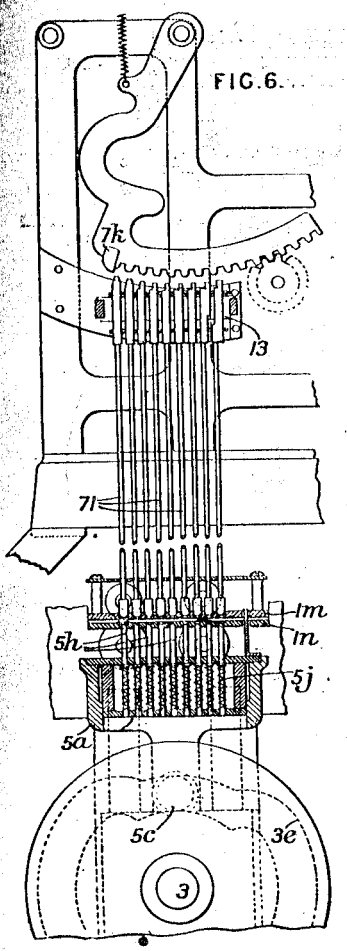

FIG. 3.

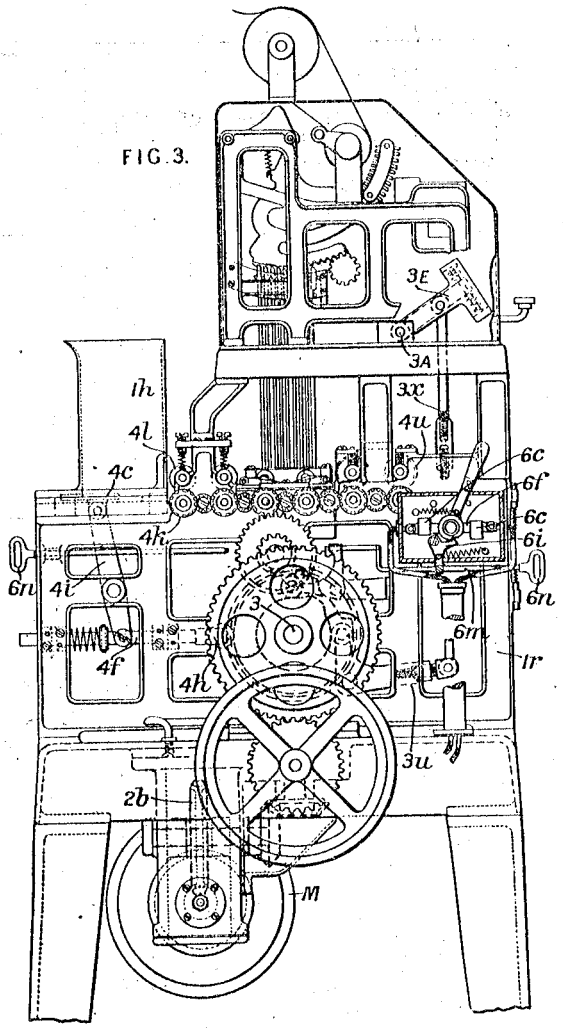

Totalizing-counters.—The adding-wheels are mounted in pivoted frames and put into and out of gear with the sector gears 7*c* by means of slotted rockers 8C, as in the above-mentioned Specification; for adding items, the wheels are in gear on the rearward stroke. For taking totals, the depression of a totals key T1 reverses their relations and allows the sectors 7*c* and type sectors 7A to advance until the lugs 8*c* on the adding-wheels engage with the pawls 8*d*; at the same time, through the links and levers T6, T7, T15, the stops T20 are lowered and release the supplemental sectors 7*aa*. Prior to taking totals, three record-cards are passed through; the first, perforated for noughts, effects the retraction of the type sectors and the resetting of the gear sectors, the second stops the machine as a warning, and after restarting, the third (blank) card arrests all the pins 5*h* and allows action of the key T1.

Transfer mechanism 8*c*, 8*d* similar to that described in the above-mentioned Specification is employed.

Operating by motors.—An electromotor M, Fig. 3, drives the main shaft 3 through a worm-wheel 2*b* and bevel-gear. It can be put out of circuit by a blade-switch 6*f* connecting the poles 6*c* of the motor circuit and locked by a latch 6*i*, which can be released by handles 6*n* on a rod 6*m*. For suspending work on the passage of faulty cards, or before printing totals, a switch-pin 6*u*, Fig. 9, normally depressed by a card, is allowed to rise. An extension 6*f* carries a shift-bar 6*x*, which then comes between

Powers Accounting Machine Co 22359/1914 Statistical machine

22,359. Powers, J., and **Powers Accounting Machine Co.** *Nov. 22, 1913.*

Statistical machines.—Relates to interchangeable hand and electromotor driving-connexions for machines of the kind described in Specification 26,896/13, wherein a recording adding-machine is set by and records items and totals of the data represented by perforations previously produced in record cards. Rotation is communicated from a motor M through worm-driven parts 5, 6 and bevel-gearing 8, 9, 11, 29 to a sleeve 23 feathered upon the main operating-shaft 25 of the tabulating or like machine, but slidable thereon under the control of a lever 14 so as to interrupt the drive from the motor. This is brought about by forcing in a hand driving-wheel 31 from the position shown until a gear-wheel 21 upon the hand-wheel shaft 18 engages a gear-wheel 30 upon the main operating-shaft, whereupon the machine may be driven by the hand-wheel. The hand-wheel shaft is locked as to axial position by means of grooves 32, 33 into which takes a pin 35, pivotally connected to one end of a spring thumb-lever.

FIG. 1.

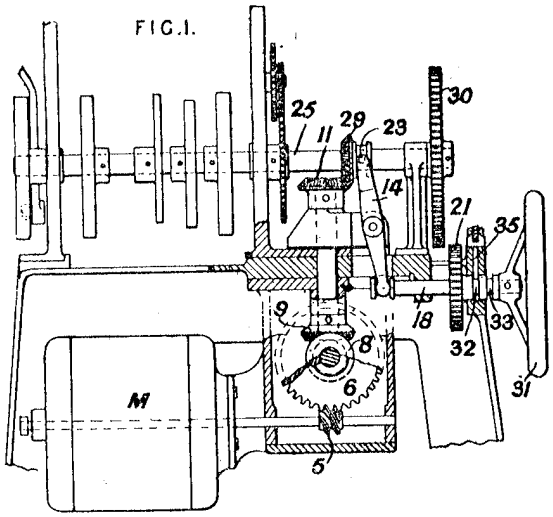

Powers & Waterbury 7800/1915 Test punch cards

7800. Powers, J., and Waterbury, J. I. May 26.

Statistical machines.—A machine for testing the accuracy of the punchings in the cards for use in a statistical machine comprises a plate with perforations corresponding to those which may be made in the cards. The perforations corresponding to the required data are covered up by setting-mechanism, and light is transmitted through the plate upon which the card to be tested is placed; any error in the card is shown by the light passing through the incorrect hole. The perforated plate 5 is placed on a semi-cylindrical box in which electric lamps 12 are fitted below a glass plate 11. Slides 27, each carrying a masking-disk, are mounted in slots 31 corresponding to the rows of perforations, and are moved by levers 37 connected to setting-slides 42. The slides carry on their undersides ratchets 50 which coact with pawls 54 capable of being released by finger-levers 57 or by a bar 63 connected to an operating-treadle 66; the slides are returned by springs 51. A button 69 carried by the treadle operates a switch 73 for the lamp circuit. To enable certain data recurring in a number of cards to remain set, slides 80 are provided with teeth 81 which are set by handles 82 and coact with a cross-bar 85. The cards are placed in grooves in side guides 18 provided with flared ends 20, and are pushed back against a lip 21 by a spring flap 22.

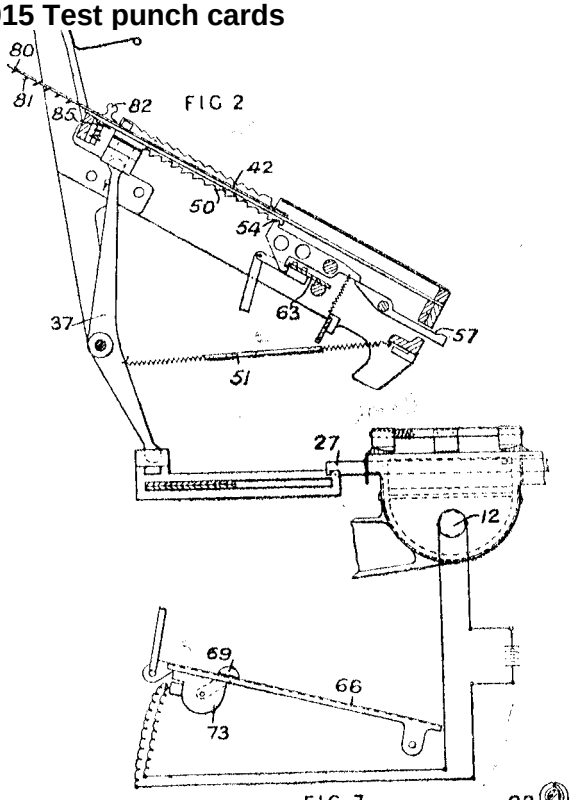

FIG 2

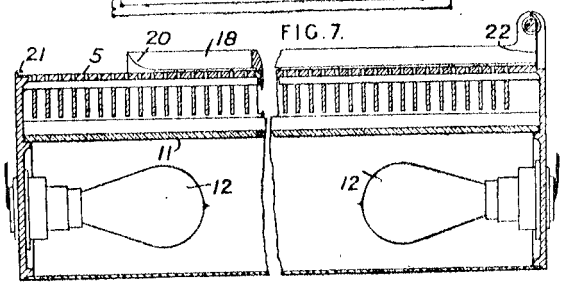

FIG. 7.

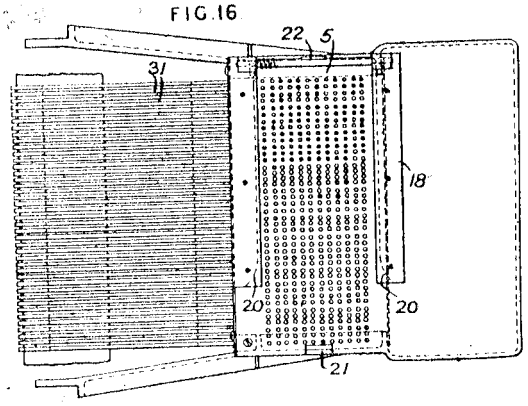

FIG. 16

Powles H H P 10278/1899 Calculating calliper gauge

10,278. Powles, H. H. P. May 16.

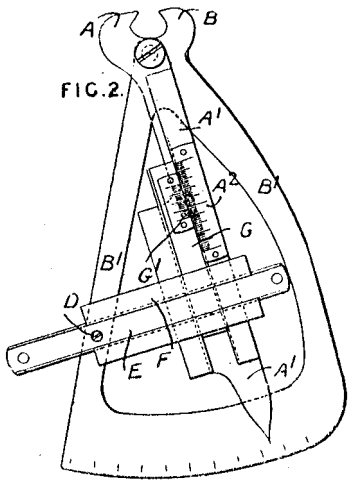

FIG. 2.

Calculating - apparatus; calliper gauges.—The callipers are arranged so that they will read the square, or proportionally to the square, of the linear distance between the points, so that calculations as to areas of circles and squares, the electrical resistance of a wire, &c. may be made by mere measurement. The piece E is pivoted at D to the frame B^1 carrying one jaw B, and upon it moves the slide F rigidly secured to the vernier arm G sliding on the leg A^1, the jaw A being upon this leg. The displacement of the vernier G^1 from zero point on the scale A^2 is proportional to the square of the distance between the jaws A, B. The jaws may be formed as semicircular pieces turning in the ends of the legs of the callipers.

Poynter J B 1285/1891 Percentages

1285. Poynter, J. B. Jan. 23. *Drawings to Specification.*

Calculating-apparatus. — Relates to computing-scales for ascertaining percentages, discounts, commissions, premiums, and rebates, and performing multiplication and division. The invention is based on the theory of transversals. Two parallel scales and a diagonal scale are provided, and a line which, stretched across the three scales, reads the parallel ones proportionally to its division of the diagonal one. Several diagonal scales are supplied for the different purposes.

Prinsep D G 13915/1892 Slide rule for range finding

13,915. Prinsep, D. G. July 30.

Calculating-apparatus.—Relates to an arrangement for range finding. A base AB, Fig. 1, is taken and, AC, BC meeting at the distant object, the angles BAC, ABC are observed. BD is then measured off parallel to AC, D being taken so that CAD = ABF. A known base BE is then placed so that ABE is an isosceles triangle, and the angle BAE observed. Then, if R be the range, $R = \frac{AB^2}{BD}$ and $AB = \frac{BE}{2}$ cosec. $\frac{BAE}{2}$ and therefore $R = \frac{\left(\frac{BE}{2} \text{ cosec. } \frac{BAE}{2}\right)^2}{BD}$. The details of this system may be slightly modified. To calculate rapidly the value of R, a logarithmic slide-rule is employed forming part of the case of the observing-instrument. This slide-rule, shown in Fig. 5, consists of a rotary ring *ab* turned by

FIG. 5.

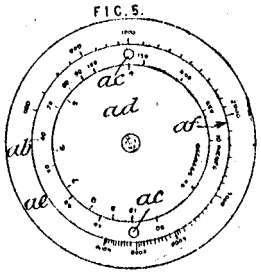

FIG. 1.

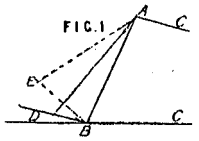

knobs *ac* between fixed scales *ad*, *ac*. *ad* is graduated in angles for the values of 2 log. $\left(\frac{BE}{2} \text{ cosec. } \frac{BAE}{2}\right)$ BE being a constant. *ab* is graduated for log. BD (reduced to inches for convenience) and performs the necessary subtraction of the logarithms by merely adjusting it with regard to the angle scale. The pointer *af* on the ring then reads the range on the outer logarithmic scale *ae*.

Printz O A K 112455 of 1916 Adder

112,455. Printz, O. A. K. Dec. 29, 1916, [*Convention date*].

Adding-apparatus of the independently-operated kind having differentially hand-set graduated racks bearing teeth adapted to engage the receiving-wheels of the totalizing-counter are provided with means whereby, after each digit of the item is set from the left, the racks are moved out of engagement with the totalizer and held against return to allow of transfer between the counter wheels. Setting of the spring-retracted racks 2 is effected by a stylus 1, which is moved until side members carrying a cross-bar 4 force a bar 6 carried by slotted members 5 on to the counter wheels 7 to lock these against pawls 8. On the removal of the stylus, springs 12 return the racks through a short distance until the teeth are engaged by spring-controlled locking-members 10. During this movement, contact between the teeth and projections 11^a on parts 11 lifts the racks out of gear with the wheels 7, the members 11 being held

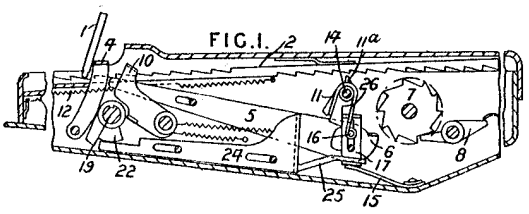

against movement on a shaft 14 under the influence of springs 26 by slides 17 moving on pins 16 and forced upwards by springs 15. On the completion of the item, the racks 2 are freed for return to normal by a shaft 19 which is rocked by an external handle. Cams 22 on the shaft lift the locking-bars 10 and force forwards a spring-retracted slide or slides 24 bearing inclined members 25 which depress the slides 17, thus allowing the parts 11 to be rocked by their springs and the racks 2 to be returned.

Proescholdt M 15289/1910 Tab calc

15,289. Proescholdt, M. Nov. 10, 1910, [*Convention date*]. *No Patent granted* (*Sealing fee not paid*).

FIG.1.

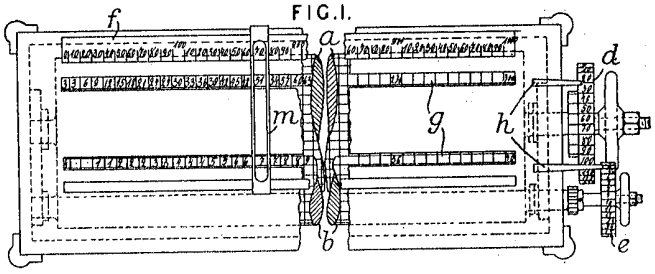

FIG.4.

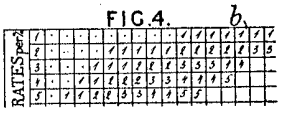

FIG.5.

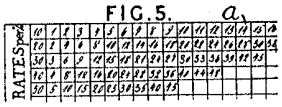

Tabular calculators. — Apparatus for computing freights and the like consists of two cylinders mounted within a casing. The exterior of the casing bears a scale *f* showing the weights in tens up to one thousand. One cylinder *b* is arranged for the computation of the units digits of the freight charges and the other, *a*, for the tens and hundreds, the final result being obtained by adding the two readings shown at apertures *g* in the casing. The cylinders are graduated transversely with rates per cent and longitudinally with the prices corresponding thereto as shown in Figs. 4 and 5 Graduated heads *d*, *e* on the cylinders in conjunction with pointers *h* on the casing allow the device to be set, and a cursor *m* is provided for reading the result.

Proell R 2516/1901 Computing scales

t e - s

2516. Proell, R. Feb. 5.

Computing-scales.—Relates to computing-scales which comprise an upper transparent member,

the number is indicated at one-third the distance along this line. Multiplication and division are performed according to the usual setting; but any one of the points A, B, C, D may be used. In a modification, the scales run in the same direction.

divided as shown in Fig. 2, and a lower member divided as shown in Fig. 1. Each member consists of a logarithmic scale divided into lengths which are arranged one above the other, and the

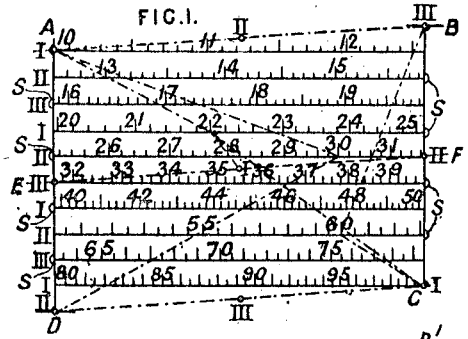

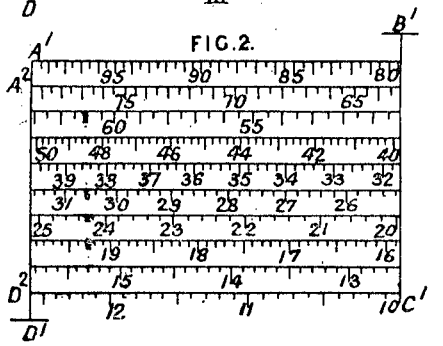

two logarithmic scales read preferably in opposite directions, one from the top and the other from the bottom. The commencing points C^1, A and the finishing points A^1, C of the two scales are supplemented by four other marked points B^1, B, D^1, D, which are in line with the ends of the scales and separated from them by a distance D^1, D^2 equal to the depth $A^1 A^2$ of the scales. The scale lines of the lower member are marked alternately at the right and left hand ends with semicircles S. To extract the square root of a number, the number on the lower member is joined by a straight line, preferably the edge of the upper member, to one of the points A, B, C, D. The point chosen must be to the left or right according as the semicircle S is to the left or right of the scale-line on which is the number, and the upper or lower point must be chosen according as the number consists of an odd or even number of digits. The square root of the number is indicated at the middle point of this line, *e.g.* $\sqrt{3}=1{\cdot}732$, which is indicated at the middle point of the line joining 30 to A; $\sqrt{60}=7{\cdot}75$ the middle point of the line joining 60 to C. For extracting cube roots, the scale-lines are numbered I, II, III in order, and the lines A B, D C, together with the equidistant parallel line E F, are bisected. One end, the bisecting point, and the other end of the line A B are then numbered I, II, III, of the line E F, III, I, II, and of the line D C, II, III, I. One of these points is joined to the number by a straight line, and the cube root of

© doc

Prosser H R 27358/11907 Helical Slide rule

27,358. Prosser, H. R. Dec. 11.

FIG. 1.

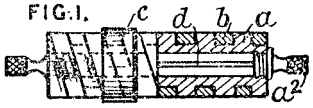

Calculating-apparatus.—Calculating-apparatus, of the type usually having the form of a slide-rule and employing two or more helical members relatively rotatable, is formed by cutting a thread upon the cylindrical surface of one of the members *a*, in which a reversible helical member *b* is adapted to rotate, both members being suitably graduated. A glass tube *c* provided with a reading line acts as a cursor for the apparatus. One handle a^2 of the instrument may carry, within the hollow member *a*, a scroll *d* bearing useful information. Two or more threads may be cut upon the member *a*, in which as many corresponding helical members *b* may be arranged, to afford extra means of calculation. The members *b* are preferably cut from the solid so as to render their configuration permanent.

Pryce-Brown G G 16090/1894 Indicator diagram

16,090. Pryce-Brown, G. G., [*Pryce-Brown, P.*]. Aug. 23.

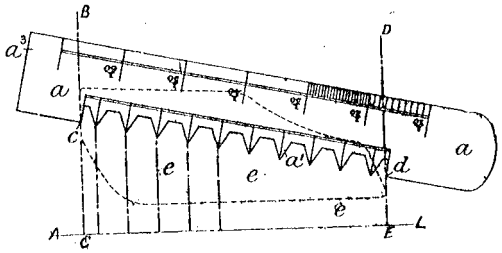

Calculating apparatus for indicator &c. diagrams. The rule *a* is provided with the usual scales for calculating the diagram, and with a square end a^3 for facilitating the ruling of the lines B C, D E at the ends of the diagram perpendicular to the atmospheric line A L. The projections *c*, *d* are then fitted, as shown, to these lines and the V-shaped projections a^1 (ten in number) pressed into the paper. The same process is repeated in a different position to obtain marks at *e*, *e*, *e*, whereupon the division lines, perpendiculars to the atmospheric line, can be at once ruled.

Pugh E O C 21935/1903 Trig device

21,935. Pugh, E. O. C. Oct. 12.

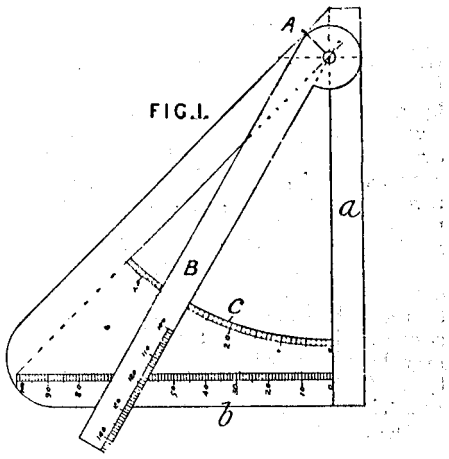

Calculating - apparatus for finding trigonometrical values in which the side and hypotenuse of a triangle are given as a percentage of the base. A flat sheet of metal is shaped as a 45° set square, and at one corner is pivoted a graduated arm B, which travels over the graduated arc *c* and side *b*. Verniers may be provided for the arc *c* and the graduations of the side *b* and hypotenuse B. The percentage values of the side and hypotenuse of the triangle give the trigonometrical values of the angle on the arc *c*.

Pugh J V 3685/1907 Broken scale slide rule

3685. Pugh, J. V. Feb. 14.

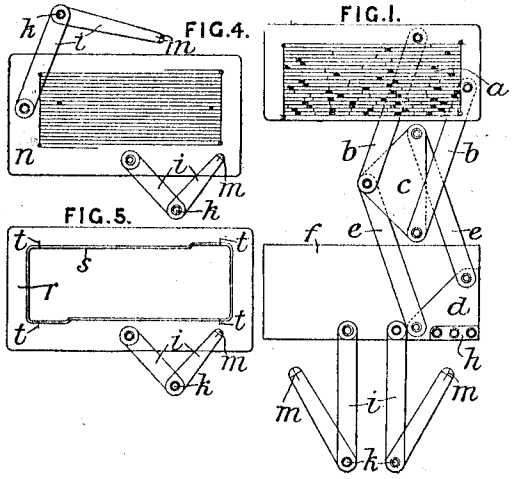

Calculating-apparatus.—Relates to arrangements of the slide-rule type in which one or more logarithmic scales are divided into equal parts arranged side by side in order to secure a long and open scale. The logarithmic scale *a*, Fig. 1, divided into twenty equal parts, is connected by parallel links *b*, *b* to a member *c*, which is in turn connected to a base plate *d* by parallel links *e*, *e*. A pointer plate *f* is rigidly secured to the base-plate *d* along an edge *h*, and carries two pivoted arms *i*, jointed at *k*, and provided at their ends with indicating-marks *m*. To use the device, the pointer plate is conveniently placed with regard to the scale, and the indicating-marks *m* are set as required. The pointer plate is then displaced relatively to the scale by means of the parallel motion, the relative position of the indicating-marks remaining unaltered. The parts of the apparatus that pass in front of the scale are preferably constructed of celluloid. Various modifications are described. Thus, only one jointed arm *i* may be employed, a second indicating-mark being provided on the pointer plate itself; or the pointer plate may carry several indicating-marks or pointers. A special scale may be used in certain calculations, when the ordinary scale cannot be employed owing to one of the pointers passing off it, consisting of a fundamental logarithmic scale divided into ten equal lengths, which are arranged so as to form a rectangle. The fundamental scale is then repeated to the right, and the whole scale so formed is duplicated. This arrangement may be varied in different ways. Further modifications consist in employing the usual uniform scale in conjunction with the logarithmic scale, to enable logarithms and anti-logarithms to be formed. The parallel motion shown in Fig. 1 may be omitted by using the ruled transparent pointer plate *n*, Fig. 4, with one or more jointed arms *i*; or a metal frame *r*, Fig. 5, may be employed having its inner edge *s* bevelled, and provided with four indicating-marks *t* corresponding with the unity points of the scale.

Pullen M & W 1948/1874 Calculating apparatus

1948. Pullen, M., and **Pullen, W.** June 4.

FIG.2

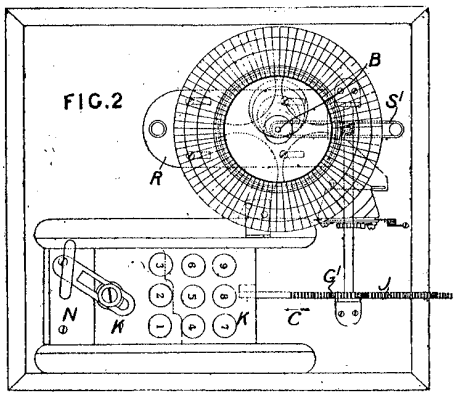

FIG.6.

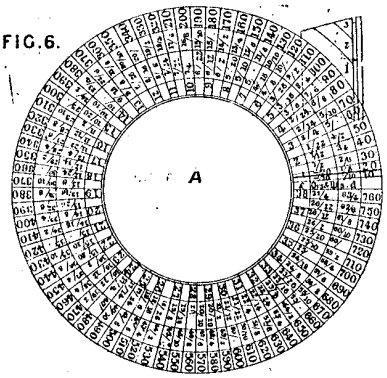

FIG.4.

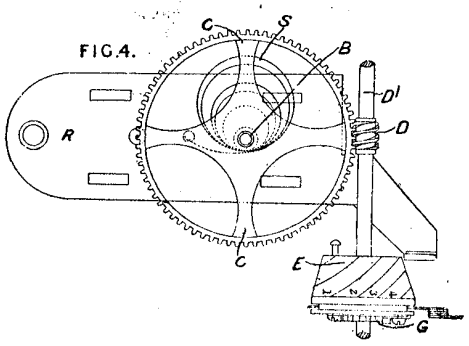

[¶] *Calculating-apparatus.*—A disc A, Fig. 6, divided circumferentially into 77 equal parts, is mounted larger disc opposite the number 9 indicated on the smaller disc gives the result required. The Provisional Specification also states that instead of the sliding plate, the sliding keys or stops may be made of different lengths or arranged to move different distances according to the number which each represents.

FIG.7.

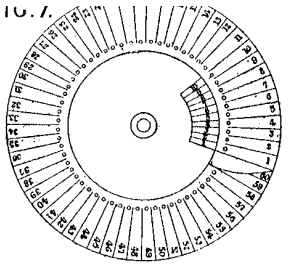

parts numbered with the first ten digits. One end of a shaft, Fig. 2, carrying a ratchet-wheel G and a pinion G^1, rests in the disc E. The pawl of the ratchet-wheel G is carried by the disc E, and is arranged to engage the wheel when a rack J is moved in the direction of the arrow *c*. The pinion G^1 gears with the rack J, which is attached to a sliding plate K fitted with numbered keys, as shown. The lower ends of these keys, when pressed down, come against notches in a plate N fitted beneath the plate K and prevent further movement in the direction of the arrow *c*. The disc A is also divided radially, as shown. The outer ring of divisions contain numbers differing by ten, while the next two rows indicate the number of shillings and pence and the number of quarters and pounds corresponding to the pence and pounds indicated by the abstract numbers; or other quantities may be indicated. One revolution of the disc E causes the disc A to move through one division. When it is required to add together the numbers five and nine, the key 5 is pressed down and the plate K moved until the lower end of the key comes against the notch of the plate N; the disc E will then indicate 5. The key is then released and the plate moved to the initial position. The key 9 is then pressed down and the plate K again moved forward. The reading on the disc A then gives the tens' digit and that on the disc E the units' digit of the result required. When the disc A has performed one revolution, a pin comes in contact with a projection on the plate R carrying the axle B. The wheel C is then moved out of gear with the worm D, the slots through which the fixing-screws of the plate R pass permitting this movement. A spiral spring S then returns the disc to the initial position, and an elastic spring S^1 draws the wheel C into gear with the worm. In a modification, shown in Fig. 7, two discs are mounted on an axis. The lower disc bears the units from one to 60 and the upper disc from one to ten, the figures only occupying one-sixth of the circumference. A hole opposite each number of the lower disc enables a pin to be inserted and the disc rotated until a fixed point is reached. In adding together two numbers, such as 5 and 9, the pin is inserted in the hole opposite the number 5 and the disc rotated until the fixed point is reached The number on the

Rafferty W C 17110/1894 Artillery range finder

17,110. Mills, B. J. B., [*Rafferty, W. C.*]. Sept. 8.

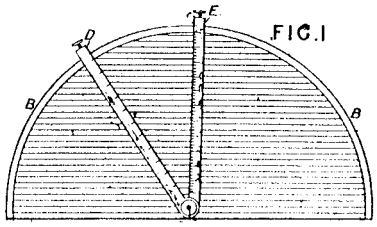

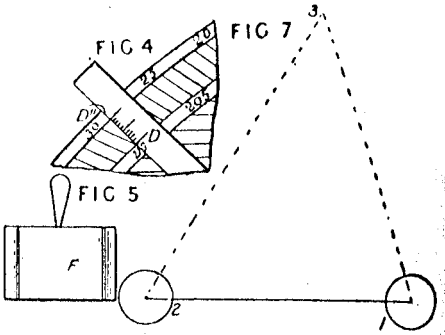

Calculating apparatus.—The apparatus is more especially for determining the range and direction of a distant object at a battery from which the object is invisible, it being supposed that the range and direction with regard to an observing station in the vicinity is known. Thus, if 3, Fig. 7, be the distant object whose range and direction from the station 2 has been determined, the instrument effects the determination of the line 1, 3 and the angle 2, 1, 3 where 1 is the battery. For this purpose the semicircular board, Fig. 4, is marked, grooved, or the like in parallel lines, and is also graduated on the edge as a protractor. The graduated arms D, E revolve independently on a pin C, and may be clamped as desired. By means of a vernier scale D^{11} on D and diagonal protractor scale, Fig. 4, great accuracy of angular measurement is obtained. In using the instrument C becomes the distant object. The arm D is set to the known azimuth 1, 2, 3. The distance piece F, Fig. 5, which is of a length to represent the line 1, 2 on the scale of the instrument, is placed with one corner against D at the distance 2, 3, and with its edge on one of the parallel lines or grooves of the board. The arm E is then turned into contact

Raggett J J 4120/1884 Adding machine

4120. Raggett, J. J. Feb. 29.

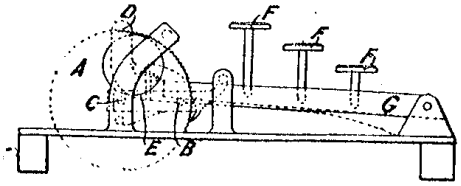

Adding machines.—A ratchet-wheel A with 100 teeth, and carrying corresponding numbers on its rim, is advanced by a pawl on a frame B pivoted on the spindle C of the wheel. A pawl D on the frame stops the motion of the ratchet. The apparatus is worked by pressing one of nine keys F, F, F, marked 1 to 9 : this causes the depression of the rods G, which first catch on the frame B and advance the ratchet through a number of teeth required, the play of the rod being properly regulated for this purpose, and then strike the frame E and bring into action the stopping-pawl. The hundreds are registered by a wheel gearing into the ratchet or in some other convenient way. The various parts are returned to their normal position by springs. In another arrangement of the machine, the working frame is pivoted upon the same spindle as the levers, the ratchet-wheel being placed between the keys and the spindle. The lever carrying the pawls is bent so as to come on both sides of the ratchet, and the pawls are adjusted so as to work the ratchet both when rising and falling, while a projection on the lever acts as a stop when it is in its normal position.

Raggett J J 6074/1884 Adding device

6074. Raggett, J. J. April 8.

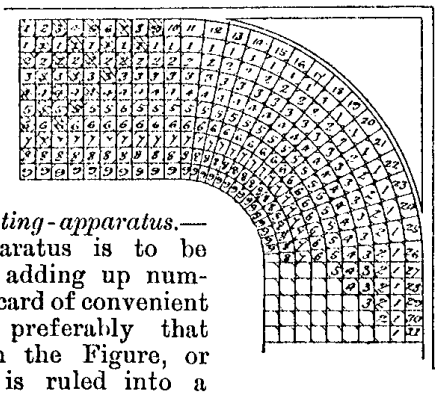

Calculating-apparatus.—This apparatus is to be used for adding up numbers. A card of convenient shape, preferably that shown in the Figure, or circular, is ruled into a series of divisions, the divisions being in rows below each other. The first row is then marked with consecutive numbers, the second row with 1's, the third with 2's, and so on up to any convenient number, preferably nine. To add any two numbers together, say 9 and 6, place the pointer on 9, run down the column till 6 is reached, then up again diagonally, and the number reached on the top row is 15. The arrangement may be varied for other purposes. To prevent error, the diagonal divisions are variously coloured, or a groove is made along them to guide the pointer.

Raggett J J 8689/1884 Modified 4120/1884, Adding machine, 9-key

8689. Raggett, J. J. June 7.

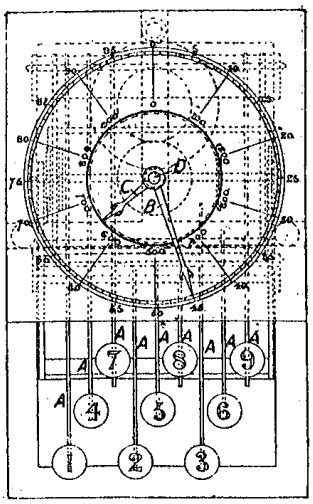

Calculating - apparatus.—The apparatus is a modification of the machine described in Specification No. 4120, A.D. 1884, and in its working parts is almost the same. Upon depressing one of the levers A, A, marked 1 to 9, a working frame carrying two pawls is pushed down more or less, and one of the pawls turns a ratchet. At a certain point the lever comes in contact with a second frame which causes a brake to act and stop the ratchet, and in the return stroke, which is effected by springs, the second pawl further advances the ratchet, until the action is finally stopped by a projection on the frame locking the mechanism. The motion of the ratchet is transmitted by bevel-wheels to a sleeve on the central spindle D, which carries the hand B registering up to 100. The hand C is fitted frictionally on an outer sleeve geared with the first so as to register the hundreds. To set to zero, C can be turned at once, while B and its sleeve are drawn upwards along the spindle so as to disconnect the gearing. The levers A, A work vertically, and the dial is placed horizontal, or nearly so, so as to be conveniently seen.

97

Ralston S B 11561/1910 Metacentric height

11,561. Ralston, S. B. May 10.

FIG. 1.

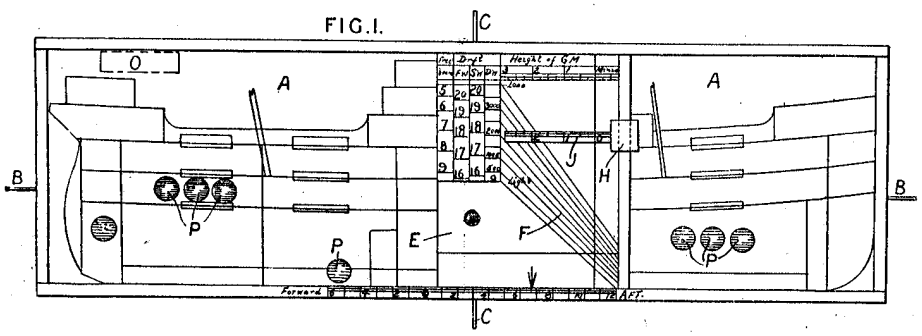

Metacentric calculators. — Apparatus for determining trim and metacentric height comprises a table A, bearing a longitudinal profile diagram of a ship and supportable alternatively upon longitudinal and transverse pivots B, C. A platform E of determined weight slides in longitudinal guides and carries a laterally-guided weight H having a graduated arm J working across calculated "G M" lines F. A weight O, proportional to the light weight of the ship, is then placed on the table so that the whole balances on either pair of pivots. Loose weights P proportional to cargo and the like are then placed in assumed positions. The scale J is adjusted until the table balances about its longitudinal pivots, and the metacentric height is read on the scale J at the point cut by that one of the "G M" lines for the dead weight corresponding to the weights P. The fore-and-aft trim is obtained by moving the platform F until the table balances about the transverse pivots C.

Ralston S B 11283/1913 Metacentric calculator

11,283. Ralston, S. B. May 14.

Metacentric calculators. — Comprises an apparatus by means of which the righting-arms for a number of conditions of loading may be readily determined. Adopting the usual notation, a plan of B.R. curves for several displacements is attached to a board *a* pivoted on a pin *b*. On one side of the board is fitted a pin *d* which can be adjusted in accordance with the condition of loading. The pin *b* corresponds to the centre of gravity of the ship, and a scale *p* shows for various displacements the B.M., while the scale *o* represents the G.M. The position of the pin *d*, to which the scale *o* is attached, is adjusted by a screw *f* and is shown at a point corresponding to G.M.=4 ft. and a displacement of 5000 tons. A bar *i* moving parallel to itself along racks *m* engages the upper end of the pin *d* and carries a scale *q*. To determine the B.R. for any angle of heel, the bar *i* is moved along the racks until the desired angle is moved through by the board *a*, and the distance is read off the curve corresponding to the displacement of the ship.

FIG.6.

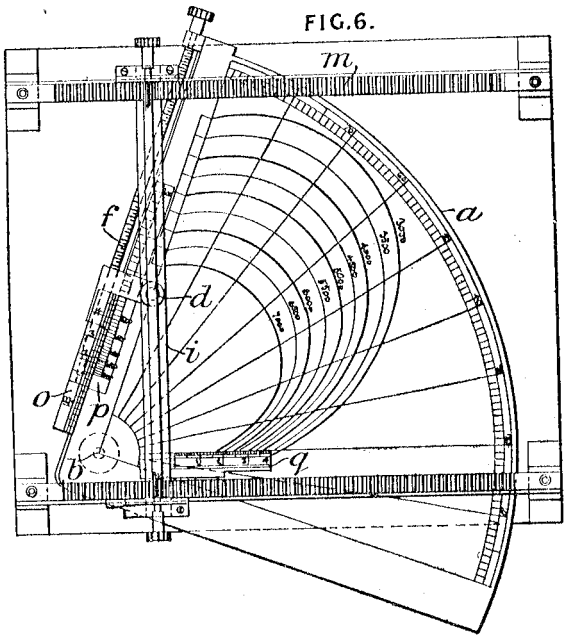

Ram G 2149/1884 Poly slide rule

2149. January 25, 1884. **Slide-rule.** L. G. RAM, Public Works Department, Punjab, India.

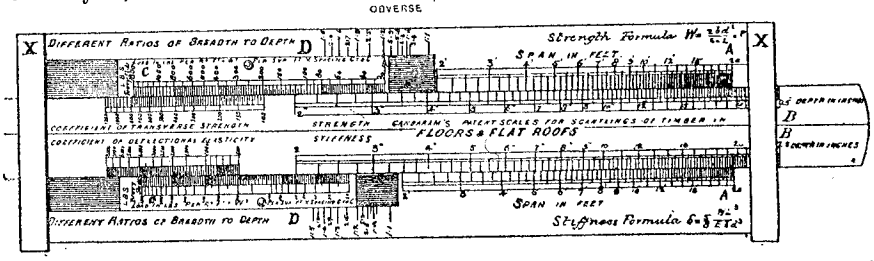

The rule consists of two pieces of wood D held together by metal straps X. A slider B works between them, and the two rules carry ivory sliders C on them. The scales are for engineering calculations, and are marked with strains and stresses, loads, etc. [10*d*. *By post*, 11*d*.]

See [15]

Ramage A G 4982/1896 Ship stability

4982. Ramage, A. G. March 5.

Calculating-apparatus.—An apparatus for determining the stability of a vessel from its model consists of a tank *a*, furnished with a vertical slide *b* carrying an arm a^1 which can be rotated round its axis by a worm-wheel arrangement E. The model is immersed to the water line, and a float M attached to a magnifying-pointer *g* indicates on a scale *p* the rise of the water in the tank. The model may be inclined at various angles and the water line marked on it for the same or different displacements. The model is afterwards suspended between centres to obtain its centre of gravity, and its stability is subsequently determined by calculation.

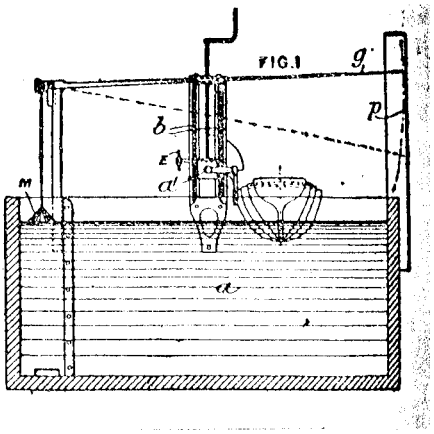

Rauchwetter F 17958/1910 Direct multiplier

17,958. Rauchwetter, F. July 28.

Multiplying - apparatus. — A machine, in which the multiplication is performed directly by the depression of the multiplier-key after the multiplicand has been set, is arranged so that a depression of the multiplier-key actuates all the parts in turn and on being fully depressed effects the registering of the products on the counting wheels and the return of the parts to their initial position. An arrangement of the machine for a single denomination of multiplicand and multiplier keys is shown in sectional elevation and plan in Figs. 17 and 19 respectively.

FIG.25.

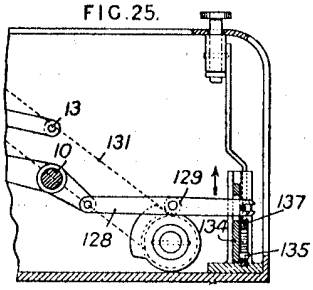

FIG.26

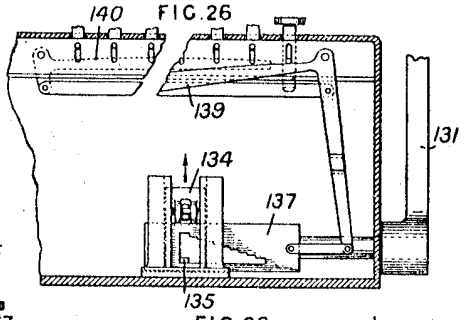

FIG.21.

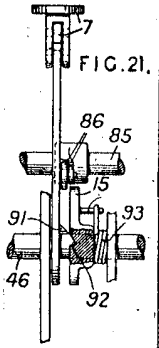

FIG.20.

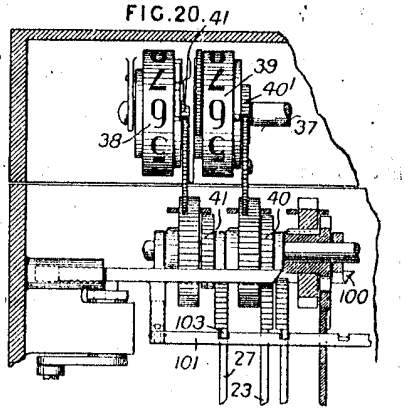

Setting multiplicand. The multiplicand keys 2 slide vertically to depress a lever 4, the rearward end of which presses on an arm 3 of the setting-lever 1 pivoted at *o*. The keys are locked in their depressed position, until another key is depressed, by means of a sliding-plate 84 engaging notches in the key stem. The keys actuate the setting-lever 1 to rotate it an amount depending on the particular key depressed and hold it in the set position by means of a locking-arm 73 actuated from the lever 4 through a lever 77 and slotted slide 75. The lever is prevented from swinging beyond its set position by a spring-controlled locking-piece 81.

Setting multiplier. The multiplier keys 7 are mounted on a shaft 46 and are connected thereto by a spring pawl 87. Each of the keys 7, on being depressed, is coupled to a corresponding cam 15 loose on the shaft 46. This coupling is effected by a pin 91, Fig. 21, on the

More text and drawings omitted.

Raymond-Barker E 12434/1903 Graphical device

12,434. Barker, E. Raymond-. June 2.

FIG. 1.

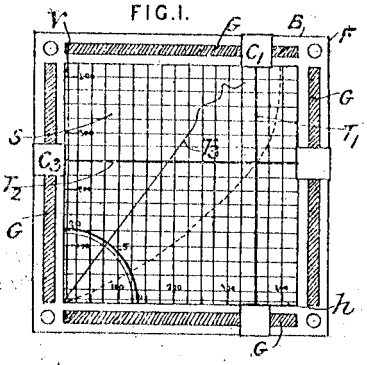

Calculating-apparatus.—An apparatus for facilitating graphic methods of calculation consists of a rectangular board, one side of which is fitted with a sheet of sectional paper S, either plain or containing curves or other data which may be evaluated by means of intersecting cursor strips, and a working-surface for the plotting of curves

252

Read W J 20708/1907 Circular slide rule for conversion.

20,708. Read, W. J. *March 18, 1908.*
Drawings to Specification.

Slide rules.—A circular logarithmic slide rule of ordinary construction is provided with an additional scale or series of scales whereby a result obtained in units of one system can be converted directly into units of another system. Rules are arranged for calculating in pounds per mile the rate of consuming coal from the number of hundredweights consumed on a journey of given distance by a locomotive, and also costs in pence derived from a calculation in pounds sterling.

Rechnitzer A 16049/1902 ASMD with motor

16,049. Rechnitzer, A. July 18.

Calculating-apparatus.—A machine for adding, subtracting, multiplying, or dividing two numbers is provided with a motor, and operates automatically on moving a handle to one of four positions in a slot representing the desired operation, after the numbers and decimal points have been set. After a multiplying or dividing operation, a carriage is returned by hand. Fig. 4 shows a transverse section of the machine, which has a stationary casing 1 containing most of the parts, and a longitudinally-sliding carriage 2, of angular section, containing a row of number wheels 22 visible through top openings, with gearing for transferring tens, hundreds, &c. to successive wheels, and a row

P 11260 909 0

of transversely-sliding racks 28. Each rack 28 has a handle 27 movable along a slot in the carriage, opposite numbers from 0 to 9 spaced to correspond to the teeth of the rack. A multiplier is set by placing the handles 27 on this row of slots, and a quotient is indicated by these handles. A similar row of slots in the stationary casing has numbers and sliding handles 7, on which any number is set

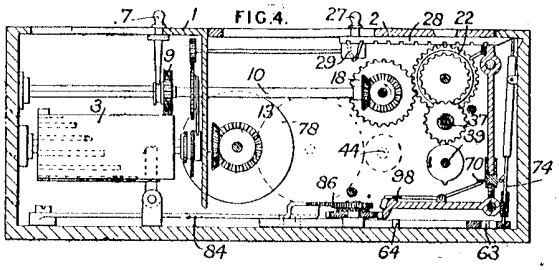

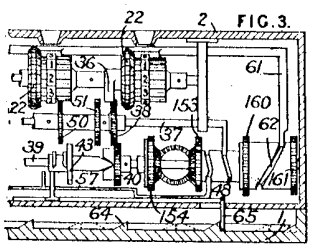

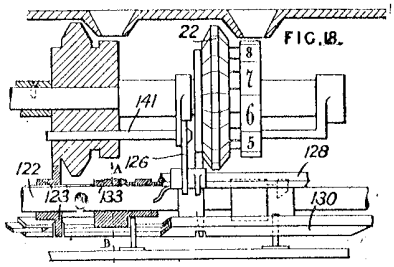

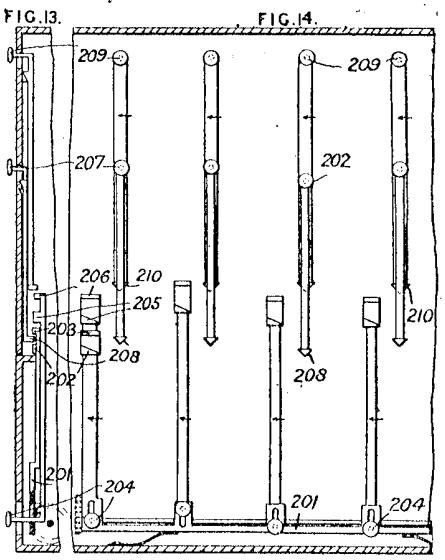

to be added to the existing indication on the number wheels 22, or subtracted therefrom; or to be multiplied; or to be divided into the existing indication on the number wheels 22. A special handle (not shown) is provided to turn a shaft carrying toothed segments to engage similar segments on the number wheels and return these to zero, when desired. The motor may be a driving-spring wound by hand and geared to a main shaft 13. This carries a drum 78 having a projection, which normally engages the hand-lever to stop the machine. If the hand-lever is pulled forward, for addition, or laterally to the left and then forward, for subtraction, the shaft 13 is freed and turns, but is stopped automatically by cams on the drum 78 pulling the hand-lever to its zero position, when one turn has been made. If the hand-lever is moved to the extreme left or right, it clears the projections on the drum, and rotation of the main shaft 13 continues until stopped by connections with the racks 28, in multiplication or division. The lateral movement of the hand-lever also moves a horizontal cam lever 84. This carries a toothed segment, and by means of toothed gear 86 drives a rack on the carriage to move this a definite distance to the right, in opposition to a propelling-spring. The gear 86 preferably includes a ratchet, permitting free movement of the carriage to the right. The carriage is then detained by a latch on it 65, Fig. 3, engaging one of the stops in either of two rows 63, 64, Fig. 4. For subtraction, the latch 65 directly engages in one row of stops 63. For addition, the cam lever 84 shifts a bar with inclines, which then guard the division stops 63 and turn the latch 65 into engagement with the other row of stops 64. The two positions of the carriage thus provided for are effective by placing the teeth of each number wheel 22, in the carriage, in engagement with either of two parallel gear-wheels 18 in the stationary casing 1; these two gear-wheels are driven oppositely by an intermediate bevel-wheel on a shaft 10, and thus cause the number wheel to rotate in one direction for addition, and oppositely for subtraction. Each shaft 10 is turned by a gear-wheel 9 on it being engaged by any number of the teeth on a drum 3, the wheel 9 being movable along the shaft 10 by the handle 7 above it; the drum 3 is driven by the main shaft 13 so that the number wheels are set during the first half-turn of this shaft. Two forms of mechanism are specified for transferring tens between adjacent number wheels. In that shown in Fig. 3, one gear in each of two pairs 154, 153, 160, 161 is driven by one of a row of toothed segments on a shaft 44, Fig. 4, geared to the main shaft 13, such driving occurring during the second half-turn of the main shaft. Either gear 160, 161 causes two cam drums to make one turn. Either gear 154, 153 rotates a shaft 39 one turn, but in opposite directions, depending on the

Rechnitzer A 14453/1905 Multiplier motorised

14,453. Rechnitzer, A. July 13.

FIG.1.

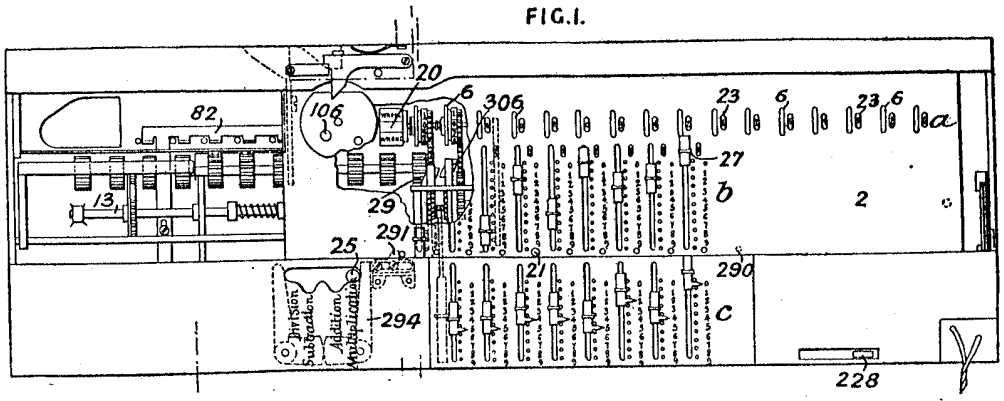

Calculating-apparatus.—In motor-driven slide-set multiplying-machines for dealing with two numbers, adapted for the four rules and of the type described in Specification No. 16,049, A.D. 1902, in which the numeral wheels of the totalizing-counter and the flat slides for the multiplier are upon a travelling carriage while the other slides for multiplicand are upon a fixed part of the casing, modifications are introduced whereby the motor is a continuous electric one disconnected at a certain excessive pressure and returns the carriage at the end of its travel, excess operation in multiplication and division without

FIG.13.

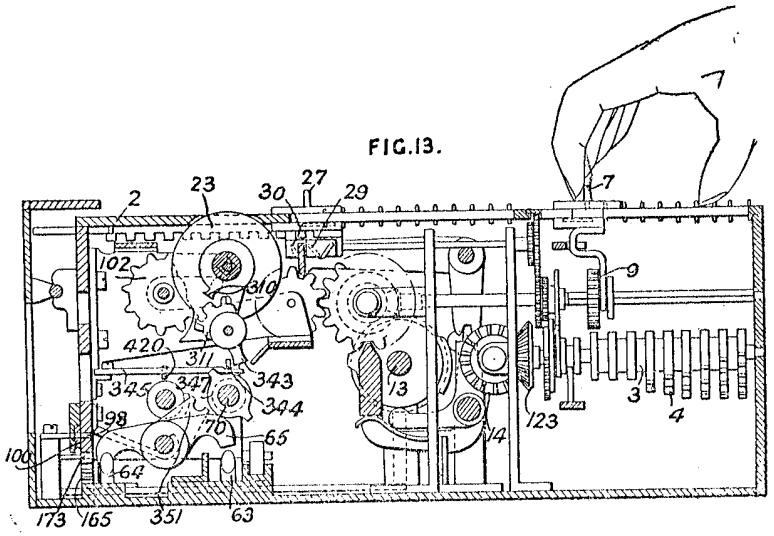

More omitted

Rechnitzer A 15908/1911 ASMD

15,908. Rechnitzer, A. Aug. 6, 1910, [*Convention date*].

Multiplying and dividing apparatus with operating-means. — In a multiple-bank machine, adapted for the four rules, (1) the depression of a key differentially positions a denominational lever and connected parts, the further movement of which by the operating-lever rotates the counting-wheels through adding or subtracting racks. Means are also provided (2) so that a new item can be set upon the keys before the previous operation, or series of operations, in the case of repeated addition &c., is completed; (3) for setting on the item or multiplicand wheels the sum appearing on the totalizer by a single movement, without zeroizing the totalizer; and (4) for preventing during an operation the restoration of the setting-parts until after one, two, or more actuations of the main shaft as may be required.

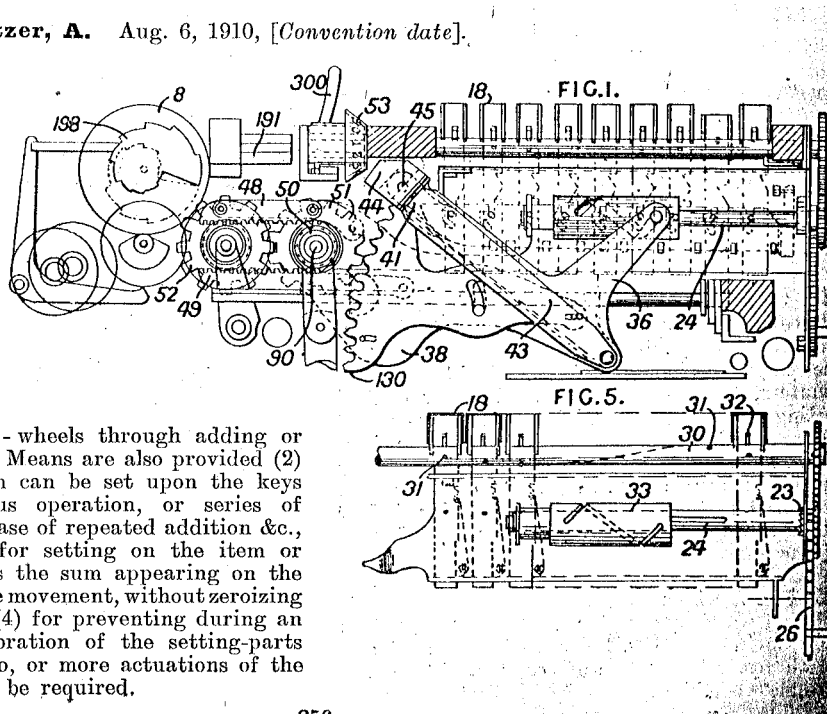

Reeves E A 14008/1908 Astronomical device

14,008. Reeves, E. A. July 1. [*Cognate Application No. 14,523, A.D. 1908, dated July 8.*]

Calculating - apparatus.—Relates to an astronomical compass and time-indicator comprising in co-operative combination a declination and time dial *a* and an azimuth and altitude dial *b* (shown on a smaller scale); there is combined therewith a sight rule or alidade *h* and a weight *z*. The declination dial *a* is adjustable relatively to the frame *c*, and the frame *c* is caused by the weight *z* to assume a position with its North-South line vertical during an observation. In order to ascertain true North, the North or South pole of the declination dial *a* is set to an angle equal to the local latitude above the horizon line of the altitude and azimuth dial, whereupon the two dials *a* and *b* are clamped together. The instrument is then grasped by the handle *l*, the clamping-nut *k* being loose, and the sun or star is sighted along the sight rule *h*, which is then fixed in its adjusted position by tightening

FIG. 3.

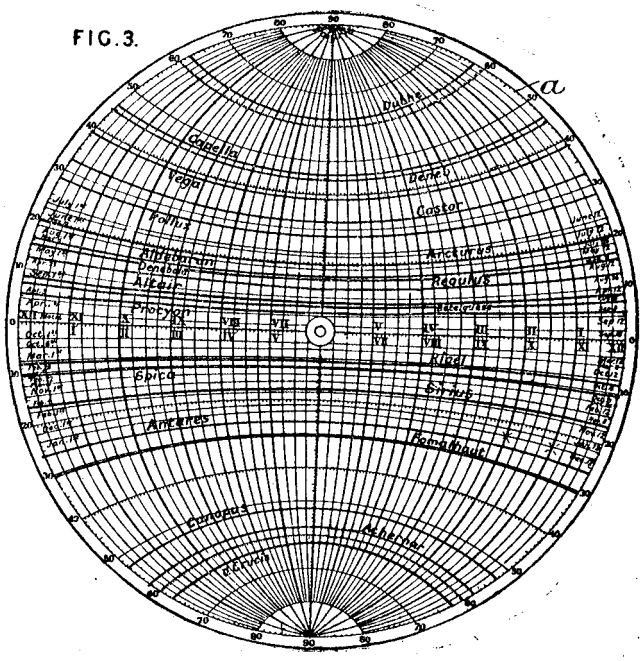

nut *k*. The horizontal or latitude line ıe azimuth dial *b*, indicated by a convenient r or pointer *l* on the sight rule *h*, is followed across until it intersects the decli- ın line of the particular star, or of the sun,

FIG. 6.

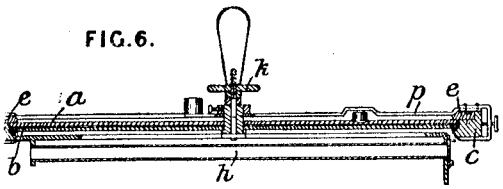

n on the declination dial *a*. By following longitude line passing through this point of section on the azimuth dial *b*, the azimuth or bearing is found, and by following the longi- line on dial *a* the time is read off. The time ıg mentioned above gives apparent time, and ision for ascertaining mean time at any moment be made by arranging a table of equation me on the rear face of the dial *a*. There may lso a circular scale on the rear face of the *a*, graduated so that, by the co-operation of the pointer *p* with this scale, it is possible to ascertain mean time from the hour angle of a star.

FIG. 5.

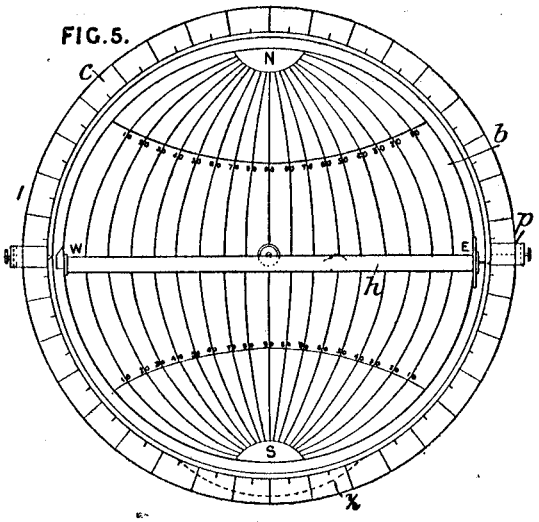

154. King, A. W. July 3.

Regnault & Lambert 243/1864 Add Multiply

243. Bonneville, H. A., [*Regnault, E. F.*, and *Lambert, E. A.*]. Jan. 29. [*Provisional protection only.*]

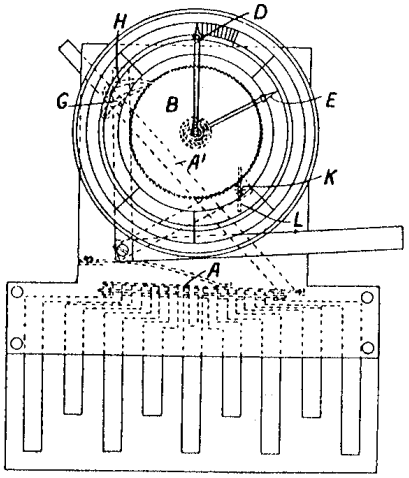

Calculating-apparatus.—Addition and multiplication may be performed with the apparatus shown. Keys representing the unit numbers are connected to levers A, A^1 and a catch H by which the hundred-toothed wheel B is pushed forward the corresponding number of teeth. The hand D gives the units and tens and the hand E the hundreds. For returning the wheel to zero the catches G, H are raised by means of a side lever, and a pinion K with fly L is brought into gear with it. The central spring is then free to unwind itself and turn the wheel B.

Reid W 3691/1813 Trig device

A.D. 1813, May 5.—N° 3691.

REID, WILLIAM.—"An instrument constructed on unerring "principles for expeditiously calculating to a certainty without "referring to tables of any kind (meridional tubes excepted) the "various cases or problems in navigation, practical mathamatics, "and trigonometry, heights and distances, and altogether em- "bracing every science depending on angles."

"The nature of my invention consists in the application of "mechanical means to the practical construction and solution "of triangles in all the various cases which can occur in plain "trigonometry."

A square frame has two of its opposite and parallel sides engraved with a similar scale of equal parts. A straight "ruler or "index" is movable round a centre at the extremity of one of the engraved sides; another straight ruler is jointed to a divided semicircle, and movable along the same divided edge of the square; the scale of equal parts on the two sides of the square and on the two rulers is the same. One of the sides of the square has no divisions, another has only the division of equal parts, and the other two sides have the degrees contained in a quadrant (with their sub-divisions), and the points and sub-divisions contained in a quarter of the mariner's compass engraved upon them.

"The edges of the two rulers will denote two sides of a "triangle," and the third will be represented by the side of the square carrying the radial rule and the sliding rule.

[Printed, 8*d*. Drawing.]

Reid & Blakey 951/1901 Ready Reckoner sheet on board for wages

951. Reid, S., and **Blakey, G. M.** Jan. 15.

Calculating-apparatus.—A ready-reckoning sheet C for making up wage bills and for other purposes is read upon a board A by the aid of a sliding straight edge B marked with the rates.

FIG. 1.

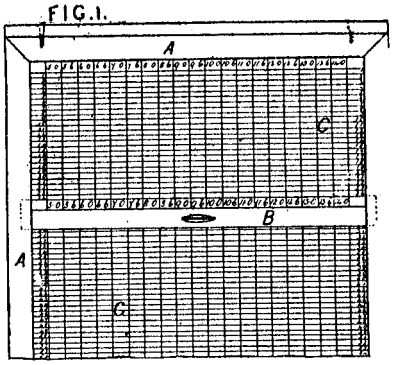

Rein R & Spitz & Co 4938/1908 Thomas type

4938. Rein, R., and **Spitz & Co., L.** March 4.

FIG. 6.

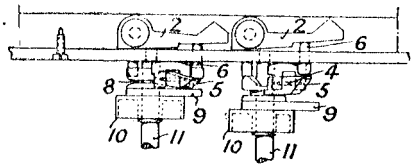

FIG. 3.

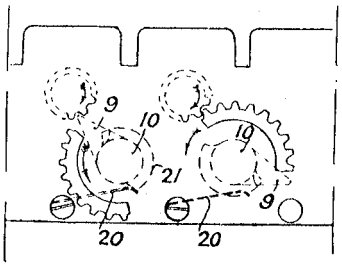

FIG. 7.

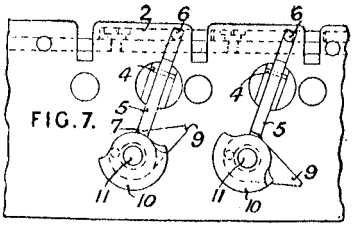

Calculating - apparatus. — In the transfer - mechanism of a calculating-machine of the Thomas type, means are provided for advancing the tens wheel, as shown in Figs. 3, 6, and 7, consisting of a pawl 2, actuated by the cam of the counting-wheel and engaging a pin 6 on a lever 5, pivoted on a pin 4. The other end of the lever 5 has a nose 7 resting in a slot 8 on the hub of a cam 9. The cam 9 and the locking-cylinder 10 attached thereto are capable of axial movement on a shaft 11. When the mechanism is operated, the cam and locking-cylinder are prevented from jumping back by the recoil springs 20, Fig. 3, coming against the end of the eccentric surface 21 of the cylinder 10.

inking-ribbon 237, Fig. 22, receives its motion from a tooth 239, which is provided on the disk 160 and engages a pinion 240 gearing with the platen 222. The ink-ribbon is fed from one spool to the other by a pinion adapted to be put in mesh with a corresponding one on a shaft 247 which can slide longitudinally ; when the ribbon is near the end of its motion in one direction, a cam acts on the shaft to reverse the motion. The control of zero-printing is as follows. The hammers, except those for the three lowest net racks, have each a tooth 265, Fig. 19, normally engaging a detent 266, which is released by a pin 269 on the rack when the rack is moved and is brought back by another pin 270. When a detent is raised, it also raises the one to its right by means of the engagement of pins 272 with slots in the next detent.

Remington Type writer Co 111729 of 1916 Multiply mechanically by quarter squares

111,729. James, R. W., *(Remington Type writer Co.).* Dec. 14, 1916.

FIG.1

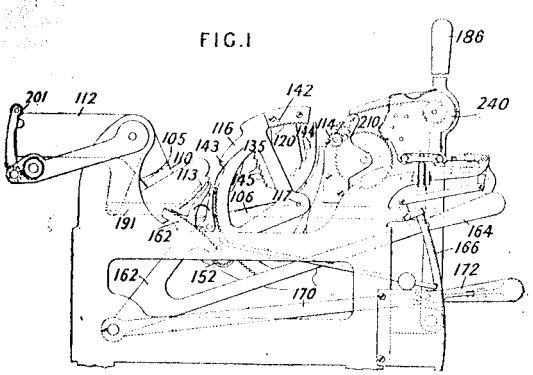

Multiplying-apparatus.—The products in a multiplying machine are obtained by representations of the partial products which are functions of their sum and difference. In the form of machine described in detail, the operation of multiplication depends upon the relation $ab = \frac{(a+b)^2}{4} - \frac{(a-b)^2}{4}$, and numbers called " principal products " are chosen which represent one-fourth of the square of the corresponding number with the quarter omitted when the square is odd; these principal products are shown in the second line of Fig. 5 below the ordinary numbers on the first line. The process of multiplication of two factors, therefore, reduces to that of subtracting the principal products corresponding to their sum and difference, and the horizontal lines in Fig. 5 indicate the manner in which the products up to 9 × 9 are built up on this principle. When the sum of the factors exceeds 10 by c, the representation is effected by the corresponding product of the factors of which the sum is less by c than ten, and of which the difference in the same, plus 10c. The machine is built up in sections each of which comprises a

FIG. 3.

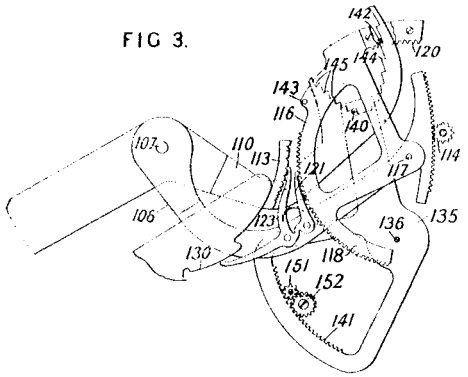

FIG 12.

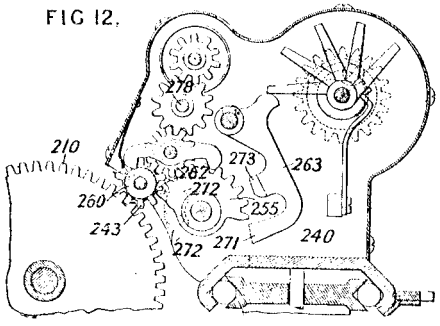

FIG. 5.

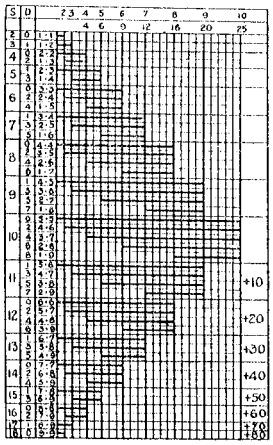

stationary frame plate 105 to which is pivoted an actuator 110 provided with steps 144, 145 representing the " principal products," which are also represented in a notched rack 113. A segmental rack 106 is pivoted at the same point 107 to the frame plate and engages the wheel 114 geared to the totalizer; this rack has pivoted thereto at a point 117 a " sums segment " 116 co-operating with a pawl 121 which is controlled by a two-armed dog 123 adapted to engage the rack 113 under the control of a cam surface 130, the position of parts shown in Fig. 3 being such that the rack 106 and actuator 110 move together. A " differences segment " 135 is carried on a fixed pivot 136 and has an internal segment 141 and a pin 140 which acts as a differential stop for the actuator 110; this segment is moved in one direction to set up the multiplicand and in the opposite direction to set up the multiplier, while the " sums segment " is moved in the same direction for both and carries two pins 142, 143 for engagement with the actuator. The pin 143 is employed when the sum of the factors exceeds 10; in this case, a short segment 120 carried by the segment registers on the totalizer through the wheel 114 of next higher denomination. In Fig. 3 the parts are shown in position for multiplying 5 by 3; the pin 142 has moved eight steps to the right and the pin 140 two to the left and, on operating the actuator 110, the pin 142 is caught in the seventh step 114 and is moved until the actuator 110 is arrested by engagement with the pin 140 in the first step of the series 145; this leaves the tooth 144 with a capacity for moving the rack 106 sixteen teeth but the actuator 110 is arrested one step in advance so that only 15 steps are thrown into the rack 106 and thus registered. The multiplicand is set up by levers 164 which engage notched plates 166 and carry toothed segments 162 engaging pinions 151 normally engaging both racks 141 and 118; the

plate 166 is mounted in two long arms 170 and all the levers 164 are moved bodily downwards in moving the handle 172 to set up the multiplier, the pinions 151 and 152 being then so set that change-gear is introduced which causes both racks 141 and 118 to move in the same direction. The machine is operated from a handle 186 which drives the extensions 112 of the actuators through toothed gears, links 191, and yielding snap connexions 201. The totalizer carriage 240, Fig. 12, is moved through an escapement operated at the final part of the handle movement; it is moved a half step on the outward stroke so that the totalizer wheels 243 driven through wheels 210 from the wheels 114 are out of gear with those wheels on the return stroke during which transfer i effected.

Transfer mechanism.—The transfer mechanisr is capable of storing transfers up to four in num ber, and comprises toothed transfer segments 25 Fig. 12, locked by detent levers engaging notche disks 260 provided with transfer teeth 262. Trans fer is effected seriatim from the lowest denomina tion by staggered arms 278 engaging cam leve 263 against spring return; these levers have po tions 275 which move the segments 255 axially int mesh with the pinions of the next denominatio and are provided with tails 271 which engag rollers 272 on the segments and return them t normal position, thus effecting transfer.

Reppert R von 13731/1907 Adder printer

13,731. Reppert, R. von. June 13.

FIG. 1.

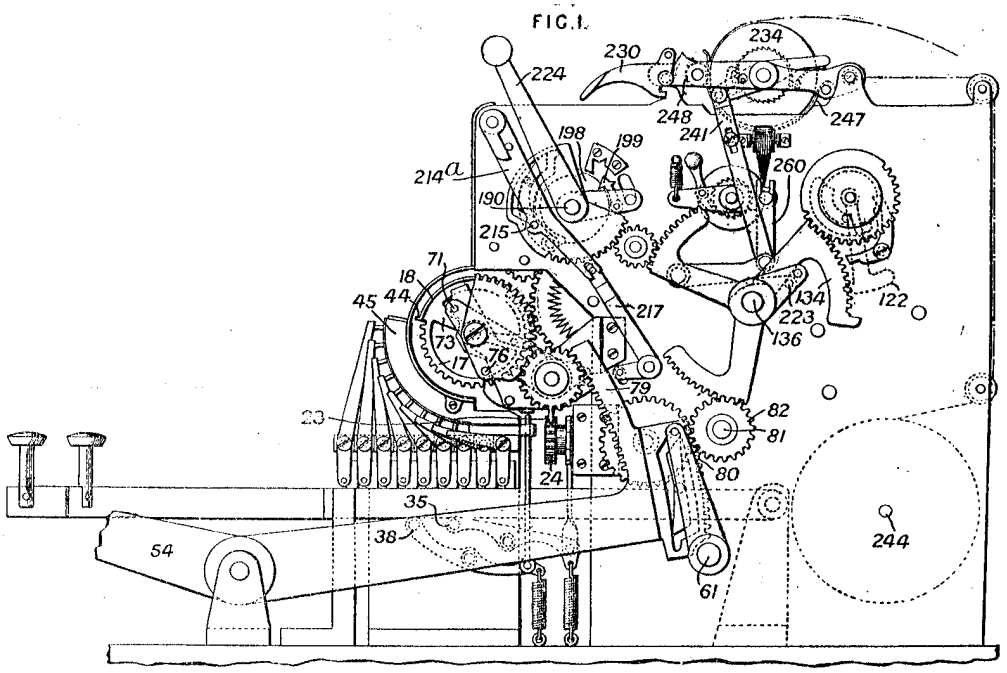

Calculating-apparatus.—In a recording adding machine of the single-bank key-set lever-operated type, the item-wheels are normally all to the right of the totalizer-wheels, but are spaced laterally at each successive key operation so as to bring each wheel in turn opposite the key-controlled setting-stops; in this way, at the end of the setting, the set item-wheels are opposite a similar number of totalizer-wheels from the units upwards, which allows an item to be set by the operator as on a typewriter, from left to right with regard to denominational order. In the setting position, each item-wheel is released and allowed to turn under the action of its spring until arrested by the key-set stops; the operating-lever carries all the set item-wheels into engagement with totalizer-wheels and then resets them, the differential movement of the totalizer-wheels being utilized to position the item type-bars. In printing a total, the totalizer-wheels are zeroized into the type-bars, and for correcting an error the item-wheels are reset while out of engagement with the totalizer-wheels. The improvements relate to: (1) the setting and spacing mechanism; (2) the

Restieaux E 2482/1879 Calendar on dials

2482. Restieaux, E. June 21.

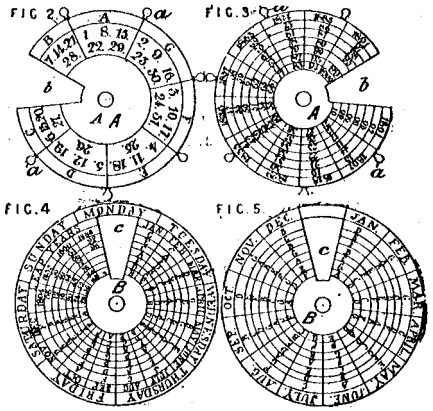

Date calculator for showing on what day of the week any specified date falls, consisting of two discs A and B, the former being the smaller, turning on a common centre. The small dial has knobs *a* to turn it. On its back, Fig. 3, are printed the years (excepting leap years), and these are viewed through the opening *c* in the disc B. On the back of the dial B are the months and index letters as shown, and on its front (viewed through the opening *b* in the dial A) are the leap years and index letters. On the front of the dial A are index letters, and under each the dates of one day in the week for the consecutive weeks. To set the indicator

32

Rheinische Metallwaaren 3511/1911 High angle gun calc

A.D. 1911.

3511. Bloxam, A. G., [*Rheinische Metallwaaren-und Maschinenfabrik*]. Feb. 11.

Computing-scales for gunnery calculations.—Guns which are adapted for high-angle fire, such as is required against airships &c., are provided with fuse-indicators which give the fuse or the time of flight corresponding both to the range and to the particular quadrant-angle; the indicators may be actuated by the combined movements of the gun, when being elevated, and of the sight-setting devices.. A graduated arm *e*, Figs. 1 and 3, fixed to one of the trunnions of the gun, moves over a fixed sector *d* as the gun is elevated; a slide *h* carrying a pointer *k* can be set manually by a screwed spindle *i* to the proper range upon the arm *e*, when the pointer *k* will indicate the time of flight of the projectile or the correct fuse. In the arrangement shown in Fig. 6, the sector 1 carrying the fuse-scale is rocked to the proper quadrant-angle by means of a link 13 connected to the gun, while the slide 5 carrying the pointer is moved through bevel-gearing by the wheel 8, by means of which are actuated the sight-setting devices, the sights shown being those described in Specification 1929/11, [*Class* 92 (ii), Ordnance, &c.]

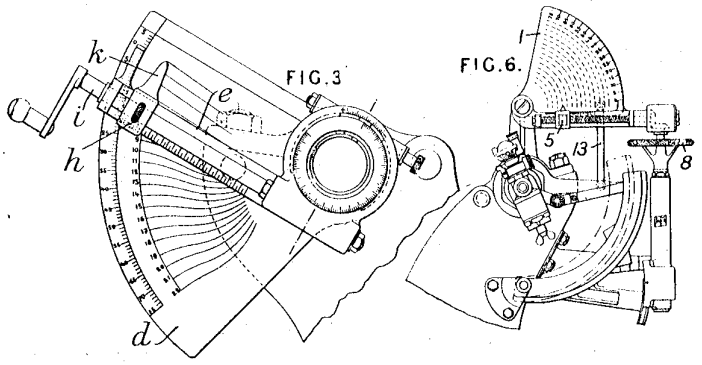

685

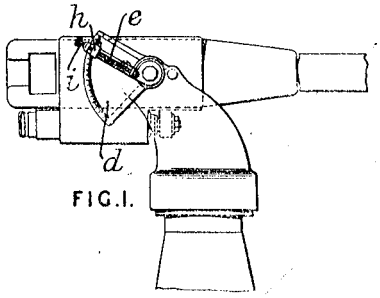

Rheinische Metallwaaren 8181/1915 Range finder

8181. Rheinische Metallwaaren und Maschinenfabrik. June 3, 1914, [*Convention date*].

Plane-trigonometry calculators.—Relates to mechanical triangles for determining the range and bearing of the target when laying stationary guns indirectly, and consists in converting the variations in the unknown side of the triangle into an angular motion about the centre of the circular scale which measures the unknown angle. This facilitates the direct transmission from the observer to a distant battery of the gun's range and bearing. The instrument comprises superposed, concentric, graduated disks *b*, *c* and a disk *a* eccentrically mounted with respect to them by an amount constituting the fixed side of the triangle which represents the distance between the observer and the battery. The target is representd by a pin *f* mounted upon a slide *e* which can be set, by operating a screw *d* through a hand-wheel *i*, to a position radially on the disk *a* to represent the distance between the observer and the target. When the disk *a* is turned by operating the hand-wheel *l* so that an index mark on an arm *o* is set to the bearing angle of the target at the observer's station, the pin *f* engages with a radial slot *h* in the disk *c* and with a cam-groove *g* in the disk *b*. The rotations of the disks *c*, *b* thus produced enable the bearing and range of the target at the gun to be respectively read off. The disks *c*, *b* may be connected to a shaft and a sleeve concentric therewith, so that the rotational movements may be transmitted electrically to dials at the distant gun battery.

FIG.2.

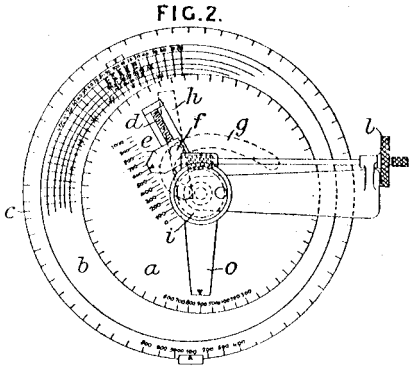

Rhodes W H 567/1858 Proportional compass and divided scale

567. Rhodes, W. H. March 19.

Counting-apparatus.—A case *a*, Fig. 3, and a plate *i* are attached to a block which can be secured on a supporting rod *b* by a screw *d*. A pin *h* and a wheel *m* are fixed on the case *a* and plate *i*. The pin *h* carries a large toothed wheel *g* in gear with a worm on the spindle to be tested. The wheel *g* carries a steadying-wheel *k* and a toothed wheel *l*, the latter being in gear with the stationary wheel *m* and an adjacent wheel *n*, which has three more teeth than the wheel *m*. The wheel *n* is on a sleeve carrying a long pointer *q* over a dial, graduated to show 1000 revolutions in tens. A pinion fixed on the same sleeve is geared to an outer sleeve and a short pointer, to show thousands on the dial. The instrument is particularly intended for counting the revolutions of a mule spindle during a minute by a watch.

FIG. 3.

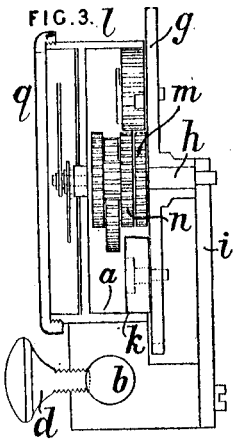

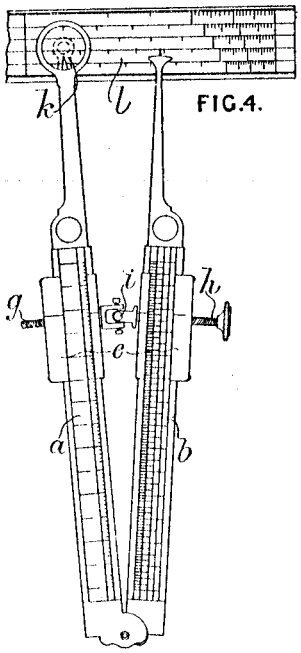

FIG. 4.

Calculating-apparatus.—A special proportional compass *a*, *b*, Fig. 4, is used with a divided scale *l* for calculating proportions. The limbs *a*, *b* of the compass carry slides *e* provided with nuts engaging two opposite screws *g*, *h*, which are connected by a universal joint *i*, so that both screws may be turned by one milled head. The slides may be moved on the limbs directly by hand, or by racks and pinions. The limb *a* is provided with a flat spring *k* to hold a divided scale *l*. The limbs carry several uniform graduations in either direction, to read to marks on the slides *e*. By use of the slides *e* and the scale *l*, operations of multiplication, division, proportion, and square root can be conveniently performed, and particularly the calculations in connection with spinning.

Richard J & F 2309/1888 Disc & roller integrator

2309. Richard, J., and **Richard, F.** Feb. 15.

Calculating-apparatus; speed indicators; liquid meters; dynamometers; counting-apparatus; gauges. —Relates to integrating or calculating apparatus based on the principle of the disc and roller, and its essential elements are shown in the Figure as applied to measuring the quantity of liquid passing through a sluice, but these elements remain the same in all the applications among which speed indicators, dynamometers, gas-testing apparatus, liquid meters, electric meters, gauges, and pyrometers are mentioned. The principal parts consist of a roller M in contact with a disc F (or preferably two discs driven at equal speeds in opposite directions). The axis of the roller has a worm B thereon gearing

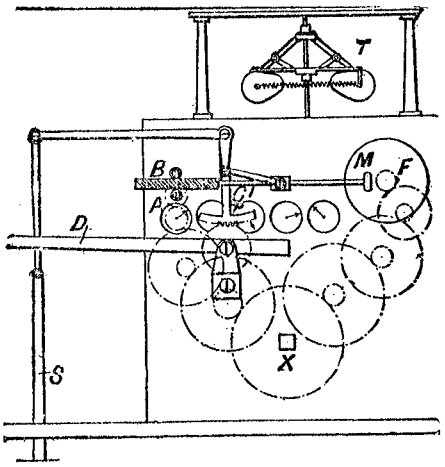

with a worm-wheel A, and the axis is capable of moving longitudinally under certain conditions. For determining products, the discs F are driven at a speed proportional to one factor, and the distance of the roller M relative to the centre of the discs is adjusted proportionally to the other factor. The worm B then drives the wheel A at a speed proportional to the product of the two factors, and the product is indicated by a counter driven by the wheel A, or by clockwork X to which the wheel A acts as an escapement. For determining quotients and velocity ratios, the discs are driven proportionately say, to the numerator, and the wheel A to the denominator, when the worm B will screw itself on the wheel A until the velocities of the periphery of the roller M, and of the part of the disc F against which it is in contact, become equal. The position of the roller relative to the centre of the disc then gives the required quotient or ratio. Where complex products and quotients of the form $(a \pm b) \times (c \pm d)$ or $\frac{a \pm b}{c \pm d}$, &c. are required, differential gear is employed to drive the discs, or the discs and wheel A. In many cases the movement of the roller may be graphically recorded by a style on the arm D resting on a drum revolved by clockwork. In the case of speed indicators, the disc is driven by clockwork at a known uniform speed governed by a regulator T, and the wheel A by gearing from the engine, or *vice versâ*. The position of the roller then indicates the speed. For electric speed indicators, applicable, for instance, to anemometers &c. where electric currents pass intermittently and cause the rapid vibration of the armature of an electromagnet, the clockwork drives the disc uniformly by gearing from one end of its spring, and the wheel A by gearing from the other end of the spring, which latter gearing is controlled in its movement by an escapement connected with the

armature of the electromagnets. For determining rapid movements of inaccessible objects, *e.g.*, the spokes of a wheel, the principle of the zoetrope is employed. A disc, with holes through which the observer looks, is driven at any speed by adjusting the roller on the uniformly-rotating discs F, and when the spokes of the wheel appear to be stationary in the holes, the angular velocity of the perforated disc is equal to that of the wheel, and the position of the roller shows the velocity relative to the known speed of the discs F. To determine the quantity of carbonic acid gas in gases produced by combustion, the gas is led through a meter, then through a cylinder containing lime which absorbs the carbonic acid, and then through a second meter. If a and b be the speeds of rotation of the meters, the quotient $\frac{a-b}{a}$ gives the quantity of the carbonic acid, and this quotient is obtained by the employment of differential gear as already mentioned. For measuring the flow of liquid through a sluice, the position of the roller M is determined by the position of the sluice-rod S, that is by the extent the sluice is open, and, the discs being driven uniformly, the counter, driven by the clockwork X and controlled by A, shows the total volume of liquid passed through. In the case of pyrometers or pressure gauges, the position of the roller M being determined by a compound metal strip or Bourdon tube, and the discs F driven uniformly, the counter controlled by the wheel A totalizes the temperatures or pressures. For dynamometers, the position of the roller M being determined automatically according to the power applied and the discs F driven by the fast pulley, the counter governed by A will indicate the work done.

Richardson A D 14426/1904 Circular trig device

14,426. Richardson, A. D. June 27.

FIG. 2.

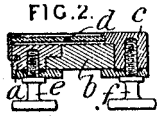

FIG. 1.

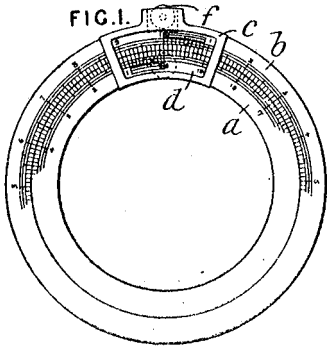

Calculating-apparatus.—An instrument for reducing levels obtained from surveying-instruments consists of two concentric rings *a*, *b*, graduated in opposite directions and fitted together as shown. A sliding part *c* moves freely over the rings and is provided with a glass *d*, on which verniers, one for each ring, are engraved to right and left of a zero line. To reduce the levels, this zero line is set, on the outer scale, to the reduced level of the starting-point, and the sliding part is fixed by a clamping-screw *f*. The inner ring is moved until the back-sight at the starting-point coincides with the zero, when the two rings are fixed by a clamp *e*. The screw *f* is then released, and the zero of the slide *c* is set on the inner scale to the next level-staff reading, and the reduced level is read off on the outer scale.

57

Richardson J 8191/1887 Adder

8191. Richardson, J. June 7.

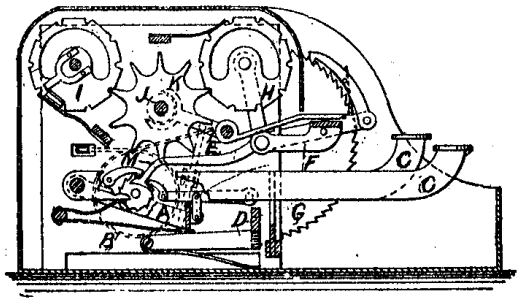

Calculating-apparatus.—Relates to an adding-machine with two series of wheels having numbers from 0 to 9 on the flat faces of the rim, one series I indicating the sum, and the other series H showing the figures of the last number which has been added. There are ten keys C, numbered from 0 to 9, which depress the pivoted bar D a distance proportional to the number. The bar D rotates the spindle J by means of a lever, pawl and ratchet, and pinion. The star-wheel K, capable of sliding on the spindle J, actuates the numbered wheels H, I. The first number, which may be of several figures, is registered by depressing the keys corresponding to successive digits, beginning at the left hand. The key on rising, after recording a number, allows a spring to lift the pivoted bar A, thus rotating a spring drum B by means of ratchet pawls. A cord, passing round the drum and suitable pulleys, is attached to a sliding clutch E which moves the star-wheel to gear with the adjacent pair of wheels. After each number is registered, the counterweighted verification wheels H are thrown out of gear by the levers F and allowed to return to zero. The numbered ratchet-wheel G is rotated a tooth after the addition of each row and acts as a check. When a numbered wheel rotates from 9 to 0, it carries

along with it the adjacent wheel by means of a spring catch and cam. The star-wheel is carried back for registering the next number by the spring drum, the pawls being lifted by the arm M.

Richmond G 23538/1892 Calc, cash register

23,538. Jolly, H. J. P., [*Richmond, G.*]. Dec. 21.

Calculating-apparatus; counting-apparatus; receipts, checking and recording.—Relates to calculating-machines and cash registers. The machine adds and subtracts and prints the items and sums, and facilitates calculations of series by finite differences. It consists of a numeral type-writer of special construction and of a printing-totalizer. Fig. 3 shows an end view of the type-writer. A carriage B, which can run on rails *a* between the standards A, has pivoted within it a frame C (suspended by springs D) which bears the spring-up keys G and contains a roller E^1 furnished with ten studs set spirally beneath the keys. The shaft of the roller terminates in a numeral type-wheel F, and gears by a pinion *h* with a sector H which is on the fulcrum shaft of the frame C and is suspended by springs I. When a key is struck and the frame *c* thereby forced down, the roller E^1 turns till the key stops its corresponding stud, after which the sector H is brought down with the frame C to the limit of the stroke, *i.e.*, till the type-wheel strikes the paper on the platen roller. The angular rotation of the type-wheel and the movement of the sector are thus complementary, the one being greater as the other is less. Spacing-mechanism of well-known construction may be used, or that shown in Figs. 10

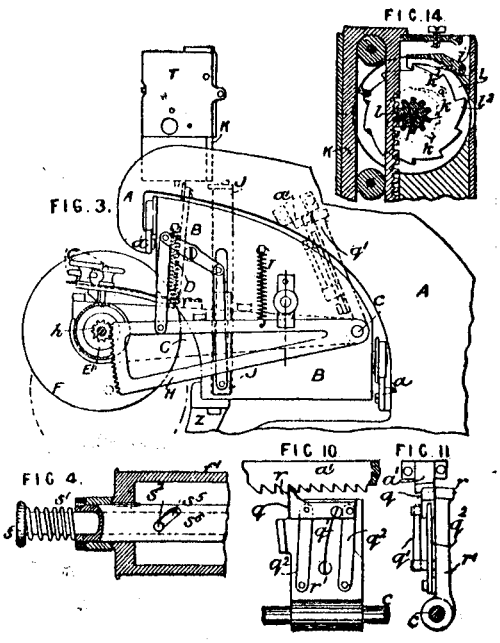

Richter O 734/1900 Combined planimeter & pantograph

734. Richter, O. Jan. 12.

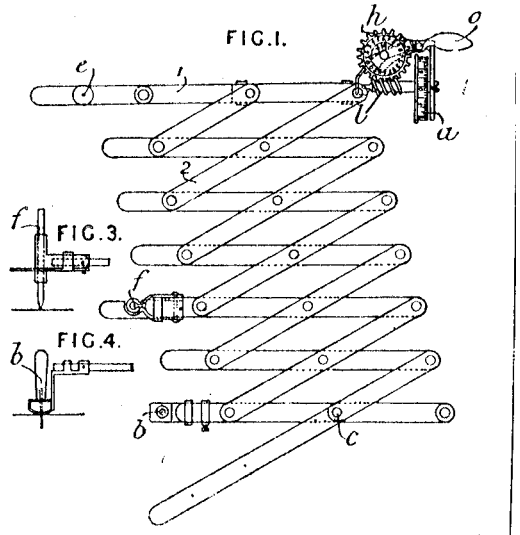

Calculating-apparatus. — Relates to a combined planimeter and pantograph. The tracer *e* and flanged graduated wheel *a* are mounted on the last bar 1 of a lazy-tongs arrangement 2 having its fixed pivot at *b*. The wheel *a* drives a recording wheel *h* by means of a worm *l* and a worm-wheel which may be readily thrown out of gear for zeroizing by a lever *o*. A pencil *f* for tracing a reduced diagram is mounted on one of the bars parallel to the bar 1.

Riedl C 23343/1907 Multiplier

23,343. Riedl, C. Oct. 22.

FIG.1.

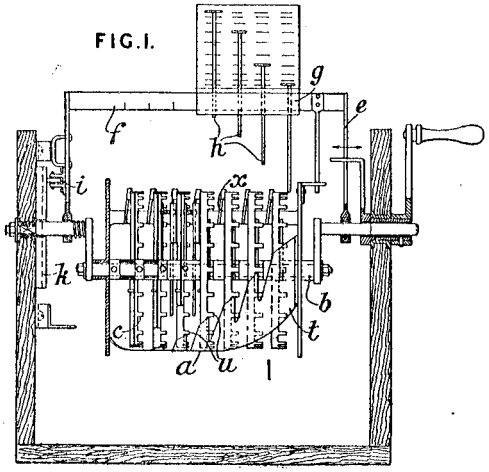

FIG.3.

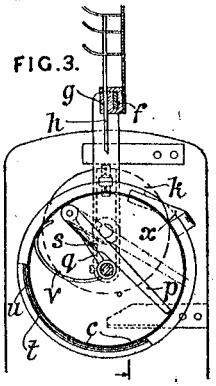

Calculating - apparatus. —In a machine for performing the operations of multiplication and division, the wheels of the totalizing - counter are actuated by fingers adjustable in a radial direction to represent the multiplicand, mounted on a stirrup, and capable of sliding in a lateral direction. The fingers on being rotated by a handle engage the disks and move them by amounts equal to the setting of the fingers. The numeral wheels *a* are mounted on an axis *b*, and are provided with teeth *c* adapted to engage the fingers *h* of the slide *g*. The slide *g* is mounted on the stirrup *e* and can be adjusted upon the arm *f* for the units, tens, &c. positions. The stirrup can move in an axial direction by its roller *i* engaging with the stepped plate *k*, this movement allowing the fingers *h* to come into the path of the teeth *c*, during the rotation of the stirrup. The transfer is effected by a lever *p* pivoted to a fixed arm *q* on which the pins *s* act and cause the lever *p* to project beyond the circumference of the wheel, thus engaging with a gap *u* of the comb *t* and moving the lever in such a way as to engage the teeth of the next higher wheel and rotate it through one unit ; the arm *q* is so arranged that after the transfer the whole length of the lever *p* lies within the disk. Springs *v* retain the disks in their proper position. The disks are zeroized

Ripper W 7324/1900 Steam engine indicator with slide rule

7324. Ripper, W. April 20.

Calculating - apparatus ; steam-engine indicators ; scales.—Relates to a marking-board having pointers and scales for registering the effective pressure in the cylinders of steam and other fluid pressure engines. A board for a triple-expansion engine is shown ; it has three pointers A, B, and C, one for each cylinder. The upper scales D, F, and H are so graduated that the widths of their divisions are proportional to the areas of the corresponding cylinders, and the pointers are adjusted so as to register the indicated mean pressures on them. The relative powers are indicated on the scales E, G, and H, which are graduated alike. A slide-rule is attached to the scales to enable the horse power to be found and recorded.

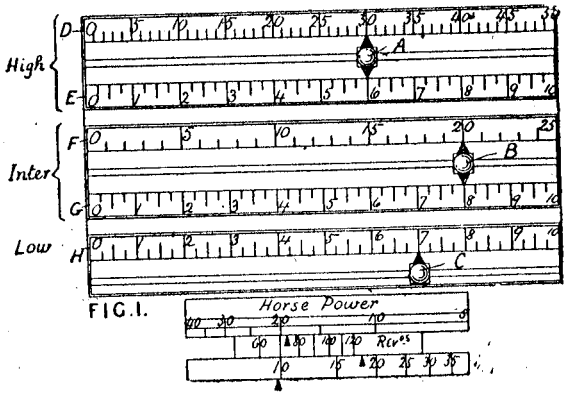

FIG. I.

Rinsche F C 13316/1900 Adder printer

13,316. Rinsche, F. C. July 24.

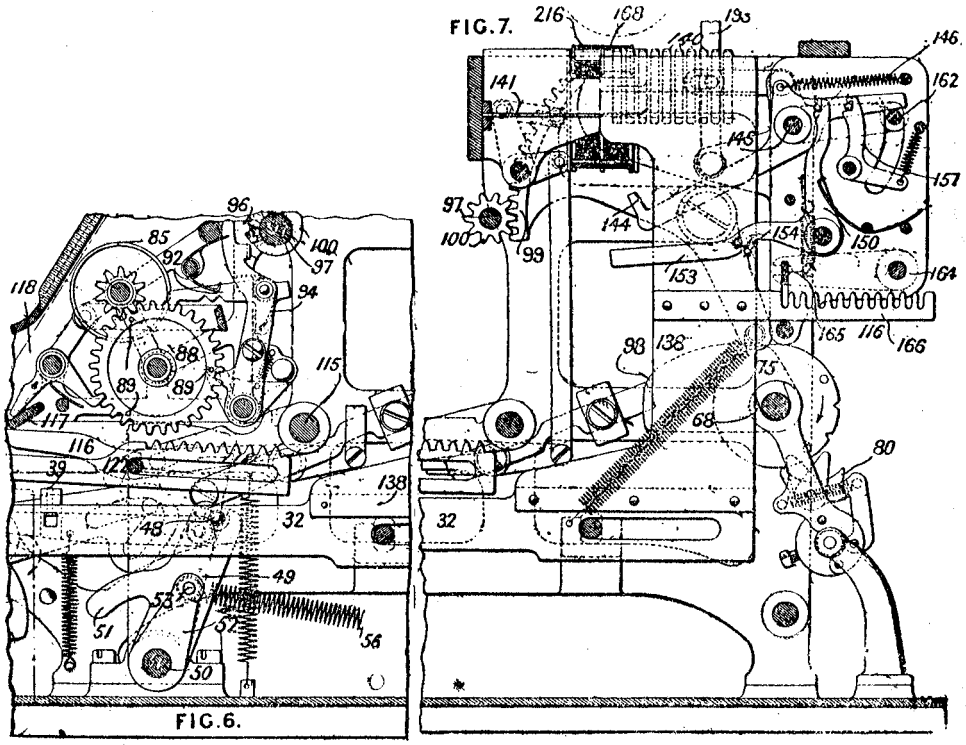

Calculating-apparatus.—Relates to apparatus for adding sums of money and printing each item and the totals of all the items. The apparatus shown is adapted for decimal coinage, but it may be

modified for English and other money. There are separate banks of keys for each denomination. Figs. 5, 6, and 7 show respectively the front, middle, and back of the machine in side sectional elevation. For convenience they are placed as illustrated, but they should be considered as if the base-plate 1 was a horizontal line. The spring keys 8, which control the movement of slide bars 32 actuating the adding and printing mechanism, are provided with notches 12, 13. When any key in a bank is depressed, a pin 10 upon it strikes a pivoted plate 14 and releases a catch 18, so as to allow the notched plate 15 to slide forward under the influence of its spring 19. The plate 15 engages the notch 12 of the depressed key and the notches 13 of the other keys, locking them all in position. If a mistake has been made, depression of the handle 23^a rocks forward the frame 23 and, by means of the projections 26, restores the plates 15 to normal position and releases the depressed keys. When an amount has been set up on the machine, the shaft 50 is rocked forward and back by means of an external handle, carrying with it a series of pairs of cranks 52. Each pair of cranks has between its members a crank 49, loose on the shaft 50 but connected frictionally to the cranks by spring-pressed balls in a race 53; the cranks 49 are connected, by pins and slots 48, to slide bars 32, controlled by the keys, and move these bars forward until arrested by the keys; the cranks 49 then remain stationary while the cranks 52 complete their forward movement, the friction balls in the races 53 travelling on tracks 51, forming extensions of the cranks 49. The arrest of the slides 32 is effected by the contact of stops 37 with the shank of the depressed key, the keys and projections being so spaced that the movement of the slide bar is proportional to the amount marked on the key-button. If no key in a bank is depressed, the corresponding slide bar remains stationary, locked by a catch 42, but such catch is released when a key is struck by the action of the notched locking-plate 15 on a bell-crank lever 44. The operating handle is mounted on the shaft 57, which is connected to the shaft 50 by links and cranks in such a way that some lost motion is allowed at the beginning and end of the reciprocation. In the return movement, a tappet actuates the rocking frame 23 so that all the locking-plates 15 are pushed back, and the depressed keys released and lifted to normal position by their return springs. If, however, it is desired to repeat the addition of the same amount, this tappet may be thrown out of action. 56, 62 are return springs for effecting the backward stroke of the parts during which the adding-counter is operated. A traversing-bar moving with the cranks on the shafts 57, 50 carries a rack engaging a sector on the shaft 68; the consequent rocking of this shaft works the piston of a pivoted dash-pot, and controls the movement of the parts. A notched disc 75 and double-reversing pawl 80 ensure a complete stroke of the actuating-handle in either direction. To transfer the movements of the slide-bars 32 to the counting-wheels 85, slotted racks 39 are pivoted to them, through the slots in which passes a transverse bar 122 carried by arms 116 pivoted at 115. The movement of a quadrant 106 in the forward stroke of the handle causes through special connecting-mechanism the bar 122 and arms 116 to rise just at the end of the stroke, throwing the racks 39 into gear with the wheel 88, and disengaging locking-pawls 118 by means of a pivoted flap 117. During the return stroke, the bar 122 being held up till nearly the end of the movement, the racks turn the wheels 88 and so the numbering-wheels 85 with which they are geared. "Carrying" is effected as follows:—At each forward stroke of the handle, the shaft 97 is given a complete rotation in one direction from the shaft 68 by means of a cam 98, segment lever 99, and pinion 100, which is geared by pawl and ratchet with the shaft, back movement being prevented by a pawl and ratchet and over-driving by a spring clip brake. Whenever a wheel 85 passes from 9 to 0, a pin 89 on the corresponding wheel 88 forces back a frame 94 in which a "carrying" pawl 92 for the wheel of next higher denomination is pivoted, and engages it with the next tooth. Then, when the shaft 97 rotates, in the next forward movement of the handle, a series of spirally-arranged pins 96 successively strike and force forward the frames 94, which have been displaced and "carry one" on their wheels. To "zeroize" the counter, an external handle 127 is pressed back and through levers 134, 135, and other mechanism releases all the latches 42 of the slide bars 32, and throws all the racks 39 into engagement with their wheels 88. On now moving the actuating-handle forward,

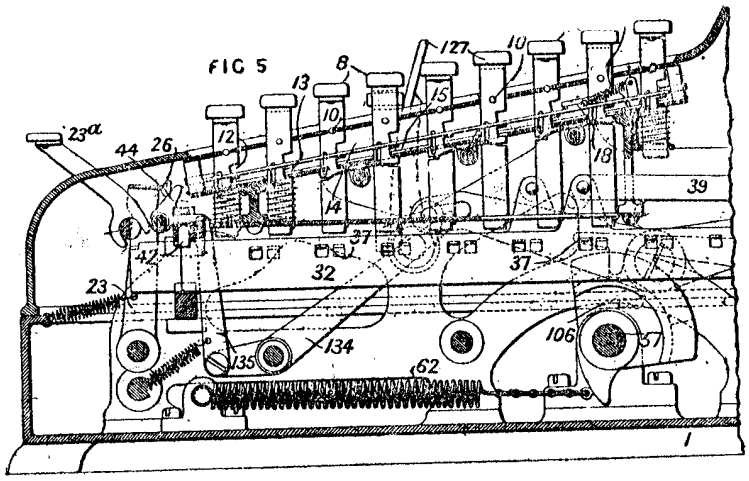

Ritchie C 652/1859 Calculating apparatus. Circular dial adder

652. Ritchie, C. March 15. [*Provisional protection only.*]

Calculating-apparatus.—Two or more hands connected by variable gearing move over a dial graduated to read money, time, weight, and the like. The hands are moved by a lever one end of

61

which is connected to one of the hands by a rod with rack. A sliding piece on the lever moves along a slot in a bar attached at right-angles to the rack which moves the second hand. Or chains may be used, one fixed to the end and the other to a sliding piece on the lever. Separate hands may be used for smaller divisions, one for days and another for hours and so on.

Rizzoli L 14535/1898 Slide rule for tacheometry

14,535. Boult, A. J., [*Rizzoli, L.*]. July 1.

Slide-rules.—The scales are specially arranged for obtaining results in tacheometry, though they are, for the most part, similar to those on an ordinary rule. The front of the rule A has a logarithmic scale at the top and another of double size at the bottom, while along the edge is a scale of equal parts read by the edge of the slider C. The back of the slide B has scales for log $\sin^2\alpha$ and log $\sin\alpha\cos\alpha$ affording means for directly determining the horizontal distance and linear altitude of an observed point which, where N is the staff reading and α the elevation, are given respectively by the formulæ $N(1-\sin^2\alpha)$ and $N\sin\alpha\cos\alpha$. Again, if α be the azimuthal angle and D the distance of a point, the coordinates $D\sin\alpha$ and $D\cos\alpha$ can be determined by using the scale for log $\sin^2\alpha$ (or 2 log $\sin\alpha$) and the lower (double sized) scale on the rule, or by using the upper scale and the usual formulæ

FIG. 1.

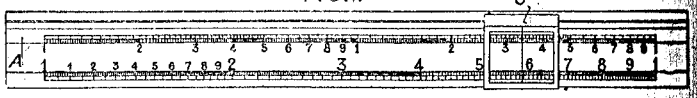

FIG. 2.

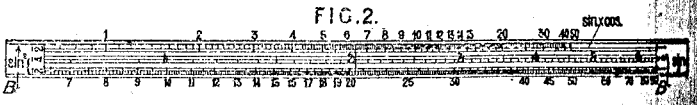

$$\sin\alpha = 2\sin\frac{\alpha}{2}\cos\frac{\alpha}{2} \quad \text{and} \quad \cos\alpha = 1 - 2\sin^2\frac{\alpha}{2}.$$

No scale for log tan α is required, as tangents can be obtained from those described by the help of the formulæ $\tan\alpha = \dfrac{\sin^2\alpha}{\sin\alpha\cos\alpha}$.

Roberts J 4121/1901 Gas meter pricing

4121. Roberts, J. Feb. 26.

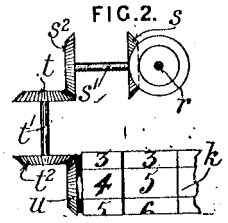

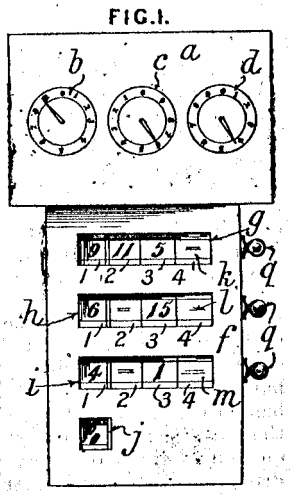

Calculating-apparatus.—Relates to an apparatus attached to or separate from a gas meter, to show readily the cost of the gas consumed. The meter *a* has the usual counting-dials *b*, *c*, *d*, and, in the example shown, the price-indicating device is attached to the meter. It consists of a casing *f* having three slots or openings *g*, *h*, *i*, within which rollers *k*, *l*, *m* can be rotated by turning the handles *q*. Each roller has four spaces, No. 1 indicating the numeral shown by the pointer of the corresponding dial, namely, the numeral on roller *k* agreeing with that on dial *b*, that on *l* with *c*, and that on *m* with *d*, while Nos. 2, 3, and 4 indicate the cost in pounds, shillings, and pence respectively of the number of cubic feet indicated by the numeral in No. 1 of the same roller. Thus, 9 on *k* represents 90,000 cubic feet, the cost of which at 2*s*. 6*d*. per thousand is

Robertson J 4709/1904 Tab Calc

See **[21]**

4709. Robertson, J. Feb. 26.

FIG.5.

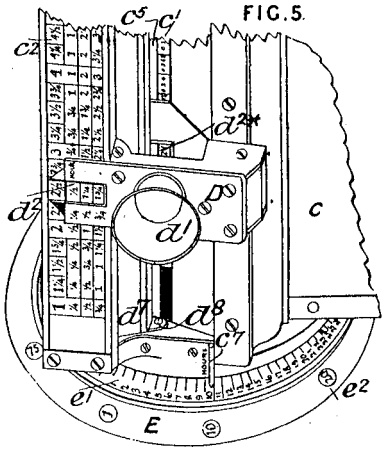

FIG.2

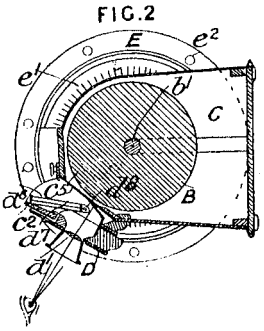

Calculating - apparatus.—A multiplying-machine for performing ready-reckoning and like computations has all the possible products marked on a revoluble cylinder, which is read, after setting according to circular and longitudinal argument-scales, by means of a slider preferably provided with a magnifying-glass and lighting arrangements. The products are upon the cylinder B, Fig. 2, the spindle b^1 of which is mounted in the casing C provided with a slit c^1, Fig. 5, over which is a glass plate c^5 allowing only one line of products to appear at a time. The argument for each line is given at the end thereof, and repeated at e^1, e^2 upon a setting-head E attached to the cylinder, the argument for each circular row of products being marked, together with three simple fractions thereof, upon the fixed scale c^2. When the cylinder has been rotated to bring the desired line into view, with the aid of the index finger c^7, the slider D is set so that the second argument appears in the gap d^2, and the result is then read on the slit c^1 in the gap d^{2*}. An opal, silvered, or other prepared glass d^6 is held in a frame d^7 hinged at d^8, and is adjusted at such an angle as to illuminate the result, the figures being then read by means of a magnifying-lens d^1.

See [8]

Robertson T 21924/1914 Slide rule for ship design.

21,924. Robertson, T., [*Robertson, T.*]. Nov. 3.

FIG. 1.

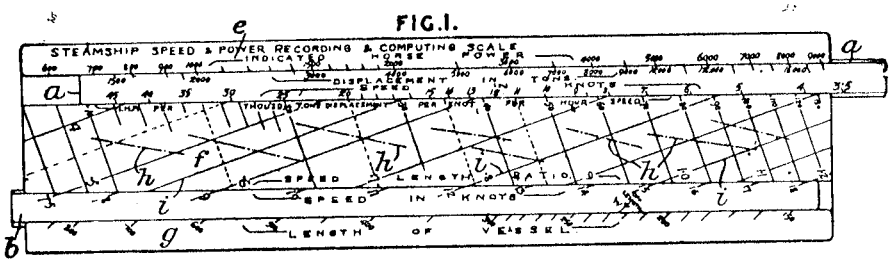

Slide-rules.—A rule for use in the design of ships is provided with two slides and is so graduated that the horse-power may be calculated from the known speed, length, and displacement of the ship. The rule is divided into three parts *e*, *f*, *g* by slides *a*, *b*, logarithmic scales to represent the various quantities being marked as shown. The 'speed length ratio' scale is obtained by dividing the speed by the square root of the length, and the upper scale on the section *f*, representing 'thrust speed length ratios,' is calculated from the formula $\frac{\text{I.H.P.} \times 1000}{\text{displacement} \times \text{speed}}$.

In use, an index W on the slide *b* is set opposite the length, and the 'speed length ratio' line *i* opposite the speed is then followed until it crosses a suitable 'thrust speed length ratio' curve *h*, which has been drawn from previous knowledge of similar ships. From this point, a line at right-angles is followed to the left, and, the speed on the slide *a* having been set opposite to it, the indicated horse-power is found on the section *e* opposite the displacement on the slide *a*. The speed scale may be continued on the lower edge of the slide *b*, the slide being reversed for using it.

Robinson 256903 of 1926 for Lancashire Optical Manufacturing Co Ltd
Watch type slide rule
See [25]

Rockford Milling Machine Co 107403 of 1916 Adder multiplier

107,403. Marks, E. C. R., (*Rockford Milling Machine Co.*). June 21, 1916.

FIG.4.

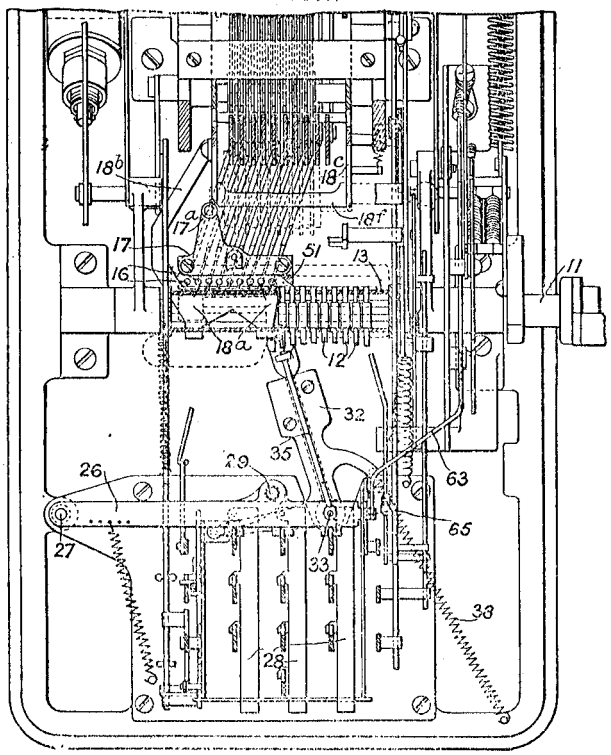

FIG.6.

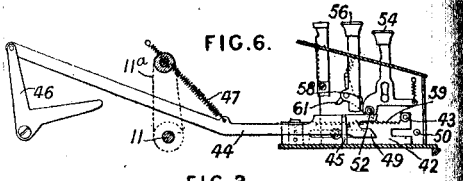

FIG.3.

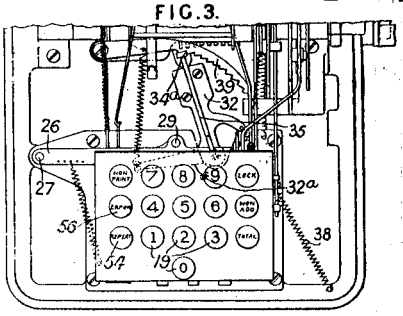

FIG.10.

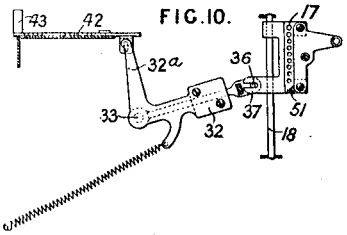

Adding-apparatus with operating-means; controlling printing of zeros; selecting denomination; multiplying by repetition; interlocking; error keys. —In single-bank, key-set, lever-operated adding and printing machines having keys 0—9 operating vertically moving type bars bearing corresponding type, the upward movement of the type-bars on the operation of the main shaft is limited by series of horizontally moving, vertically-arranged stops corresponding in number to the type-bars and having, in each series, one stop less than the number of keys, the casing carrying the stops serving as an additional stop. Extrusion of the stops is effected by a single vertically arranged set of fingers operated by the depressed keys and adapted to be moved step by step across the face of the stops. The type-bars 3, Fig. 1, bear angle-arms 15 adapted to pivot about a vertical axis and provided with projections engaging slots in vertically moving pins 16 carried by a frame 17 adapted to slide on a fixed rod 18. The frame 17 moves across a vertically-arranged series of adjustable horizontal stops 12 carried in a fixed frame 13 and provided with spring retaining-detents, the stops serving to limit the upward movement of the pins 16, and there being one row of nine vertical stops for each numerical order. The lowest row of the stops 12 corresponds to ciphers and the top of the frame 13, Fig. 9, acts as an additional stop corresponding to the numeral nine. The type-bars are always in a position to print ciphers and any bars 16 not required in the printing of the item are locked in the lowest position by a plate 18^a which is moved over them on the first longitudinal movement of the frame 17 by a roller 17^a thereon striking a bar 18^f of a spring-controlled rocking frame 18^c, Fig. 4, connected by a link 18^b to the plate 18^a. Extrusion of the stops 12 into the path of the pins 16 is effected on the depression of numeral keys 19 by inclined projections 24 on the keys, adapted, in the case of the three highest keys, to rock levers 26 pivoted at 27 and, in the case of the remaining keys, to reciprocate slides 28 connected to levers 26. Fingers 35, Fig. 4, pivoted to the levers 26 are carried by a bracket 32 that is pivoted at 33 and moved by its spring 38 step by step across the face of the stops 12 and is connected by a pin and slot 36, 37, Fig. 10, to the

Roegner G 8910/1901 Tab calc for wages

8910. Roegner, G. April 30.

FIG.1.

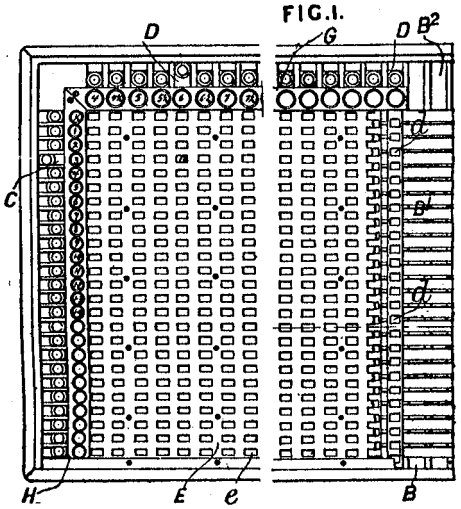

FIG.2.

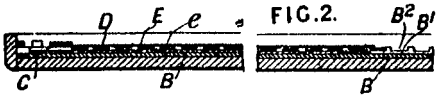

Calculating-apparatus for wages &c. The products of pairs of numbers which are marked along containing-sides G, H of a rectangular plate E are exposed at apertures *e* in the plate by shifting pairs of slides C, D in grooves B^1, B^2 at right-angles in a bed-plate B, the lower slide C being marked with the products, and the upper ones D being pierced with apertures *d*.

Roegner G 9314/1902 Tab Calc Wages

9314. Roegner, G. April 22.

Calculating-apparatus.—In apparatus for calculating wages &c., a rotary drum within a fixed drum A shows through a longitudinal slot *a* in it, multipliers B^5 and their products B^4 of multiplicands marked along the slot. To facilitate the reading, an intervening drum C having a spiral set of apertures *c* is provided to expose only the reading required, which is preserved from accidental alteration by a click at the end.

FIG. 1.

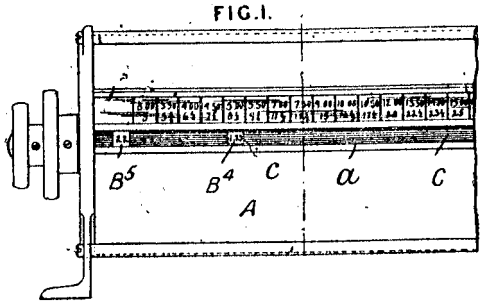

Rogers G H 23151/1895 Adder, discs

23,151. Haddan, R., [*Rogers, G. H.*]. Dec. 3.

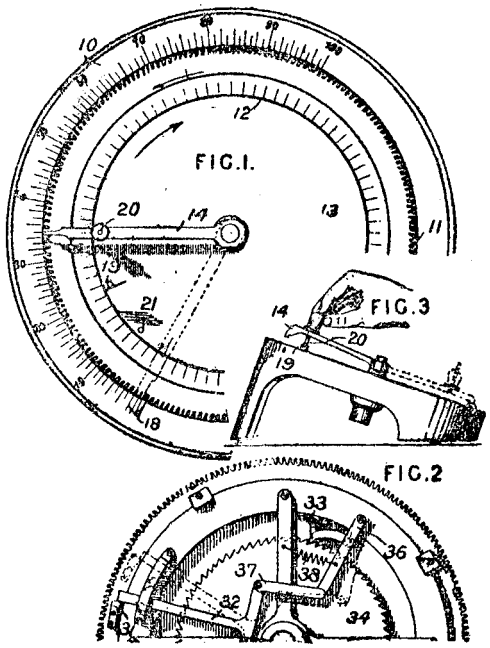

Calculating - apparatus. — Relates to adding-machines. Fig. 1 is a plan of the apparatus, Fig. 2 an inverted plan of a portion thereof, and Fig. 3 an elevation on a smaller scale. The machine is supported on cut-away flanges so as to be inclined towards the operator. Specially mounted at the upper part are an external fixed ring 10, a toothed revolving annulus 11, a fixed ring 12, and a revolving disc 13, all graduated. A pointer 14 can revolve above these rings, being normally supported, as shown in Fig. 3, by a spring, but it may be depressed to engage with the teeth of the ring 11 when desired. In adding any number less than 100, the pointer is moved to the required graduation on the scale on the external ring 10, depressed to engage the toothed ring, and then moved back to the stop 18. To add the hundreds, a spring projection 20 in the handle is pressed down to engage a stud 19 on the disc 13, and the disc advanced the required amount as shown by the dot 21 on the scale 12. For carrying automatically, the projection 31, striking the lever 32 operates, through the link 37, the pawl lever 36, the pawl 33 advancing, on its return stroke under the action of the spring 38, the ratchet-wheel 34 one tooth. This ratchet-wheel is secured to the disc 13.

Rogers J 4924/1824 Measuring Timber Chrono abr

ROGERS.
20th March 1824.

4924. A grant unto JAMES ROGERS, of Marlborough, in the county of Wilts, surveyor, for his invented "Improved method, or an improved instrument or instruments, for determining or ascertaining the cubic contents of standing timber"; to hold, &c; six months. By writ, &c.

A.D. 1824, March 20.—N° 4924.

ROGERS, JAMES.—"An improved method or an instrument or "instruments for determining or ascertaining the cubic contents "of standing timber."

This instrument is essentially composed "of three or more "limbs or arms moving upon centres," the said limbs or arms "being furnished with sights and graduated scales." The said limbs or arms may be moved "by screws, racks, or otherwise."

One of the said metal limbs is horizontal, and is united by a joint with the other two, or "angle limbs." The angle which the two latter form with each other may be increased or diminished at pleasure, as well as that formed by the "angle limbs" with the horizontal limb. The horizontal limb has a rod jointed to it; the said rod fits into a sphere that forms the top of the pillar which is attached to the head of the tripod stand. The whole instrument is capable of being revolved in a horizontal plane about a joint at the extremity of the rod, and of being fixed in any desired position in that plane. The plane of the limbs may be even adjusted out of the vertical position, if required, by revolving the rod in its socket in the sphere. A sector attached to the horizontal limb, and another sector attached to the lower

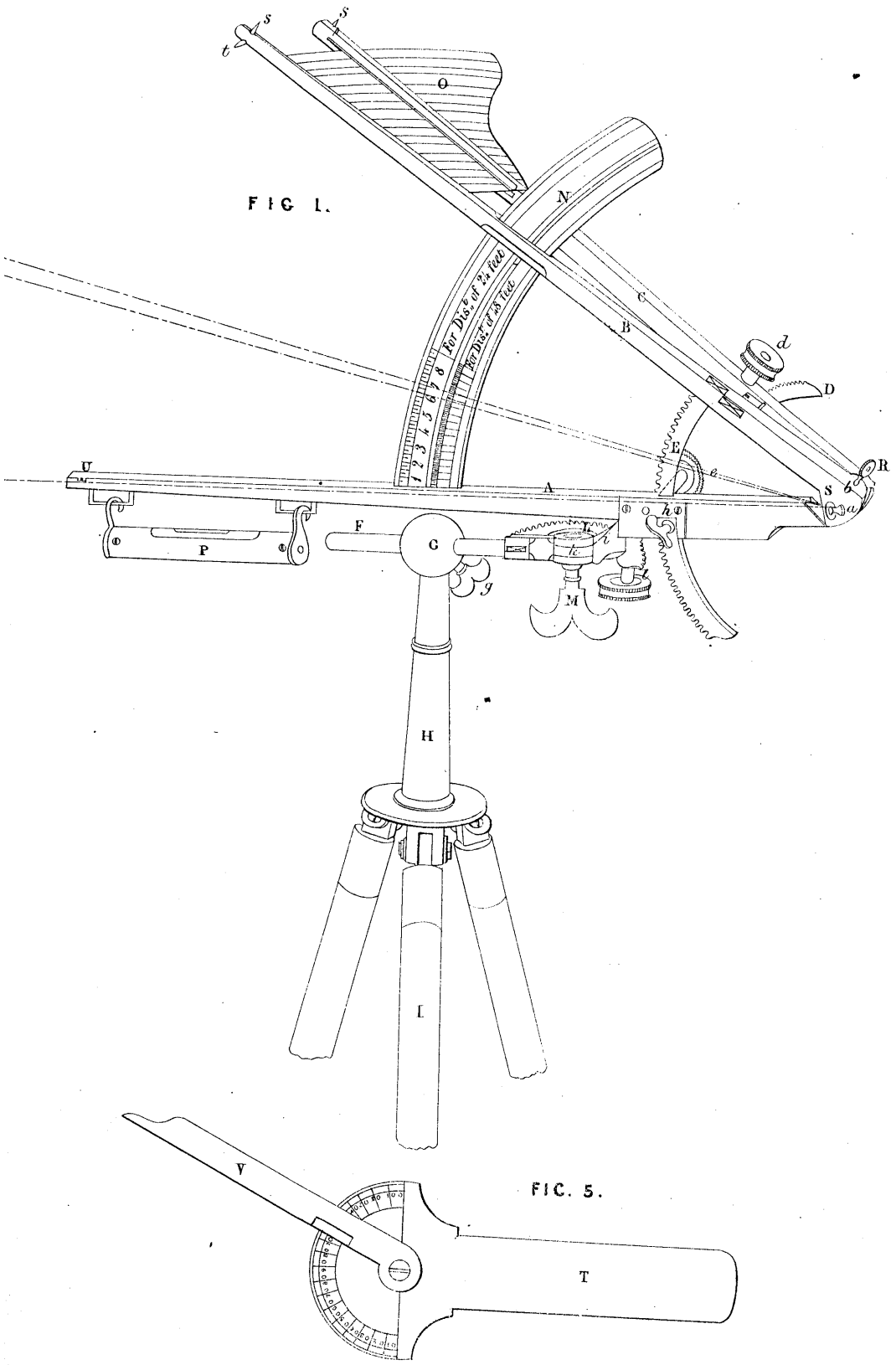
FIG 1.
FIG. 5.
For Dis.t of 24 feet
For Dis.t of 48 feet
O
N
C
B
D
d
E
e
R
S
a
b
U
A
F
G
P
g
M
h
H
I
V
T

FIG. 2.

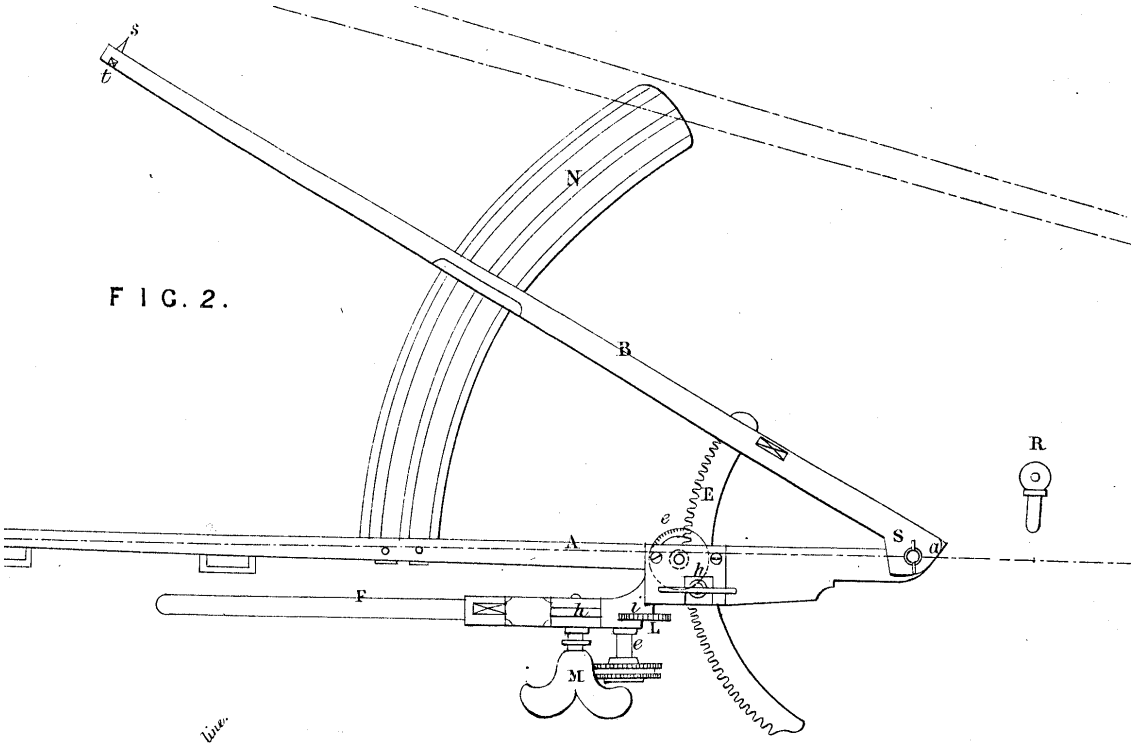

FIG. 4.

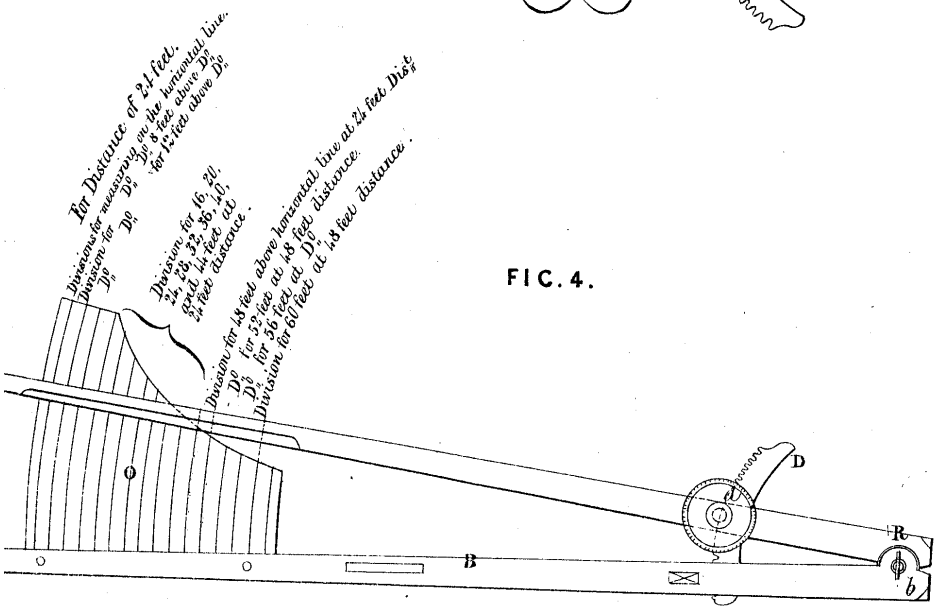

FIG. 4.

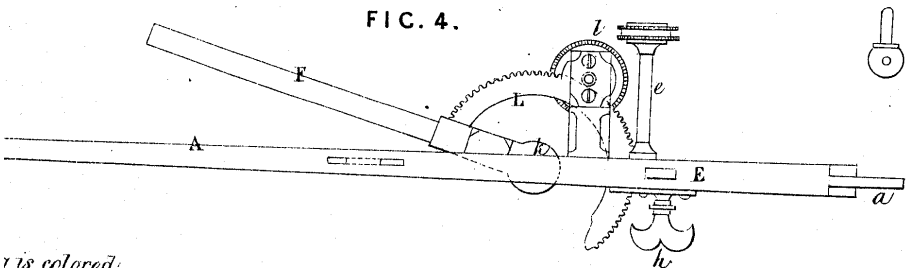

is colored.

Ronald J 1694/1906 Proportions, wages etc.

1694. Ronald, J. Jan. 23.

Computing-scales. — An instrument for performing calculations in proportion, such as wages on the premium system, percentages, and the like, consists of a pair of fixed scales *b*, *c*, set at right-angles on a baseboard *a* and a sliding scale *d*

FIG. 7.

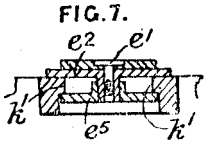

moving parallel to the scale *c* and having a pointer d^2 for reading on the scale *b* and also a pivoted arm *f*, a double sliding piece *g* being adapted to work on both the moving elements. The arm *f*

FIG. 1.

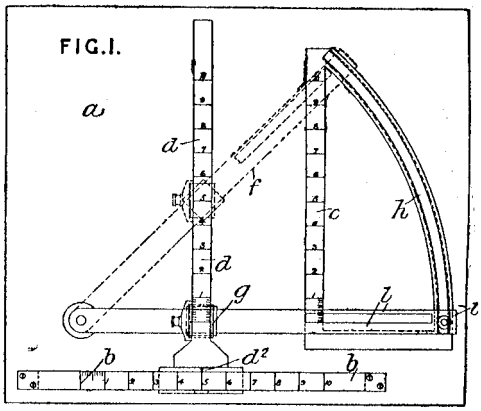

being set in a given position by given readings on the scales *b*, *d* and being clamped by a stud *i* in an arc *h*, another setting on the scale *b* or *c* will give the result on the scale *c* or *b* as required. A slot *l* with one edge in the centre line of the arm *f* is employed for reading on the scale *c*. In a modification, a vertical slot in the position of the scale *c* replaces it, the arc *h* being dispensed with, and the pivot e^1, Fig. 7, of the arm is carried in a sliding piece e^3 so as to be clamped by the latter screwing into a washer e^5 in a slot k^1 which is parallel to the slide *d* and the other vertical slot.

Roth Dr. 9616/1843 Stylus adder for sterling Chrono

WERTHEIMBER. 28th Jan. 1843.

9616. A grant unto DAVID ISAAC WERTHEIMBER, of West Street, Finsbury Circus, in the county of Middlesex, gentn, for "Improvements in calculating machines; part of which improvements is applicable to purposes where wheelwork is required"; being a communication; 6 months.

From[11]

26 Roth's Adding Machine

The machine, which was designed by Dr Roth of Paris in 1843, was patented for him in England by D I Wertheimber, in a form adapted to English currency. This example shown, which is of the latter type, will add numbers up to a total of 999,999, or sums of money up to a total of £999,999 19*s* 11¾*d*.

The machine is fixed in an oblong mahogany box, 15 in × 2½ in × 1¼ in. In the metal plate at the top are nine semicircular slots, replacing the circles of the Morland and Stanhope (**35, 36**) machines. The machine is operated by a pointer or stylus, exactly in the same manner as in these earlier machines.

The black figures above the slots are used for addition, the red figures under the slots being used for subtraction.

Carrying is automatic, and zeroising is effected by pulling out a slide at the left end of the instrument and then adding ¼*d*.

(See Pat. Spec. no 9616, 1843; *Trans. Soc. Arts*, Vol 55, 1844, p130.) INV 1917–13

See also [7]

Rothwell H 25412/1907 Cylinder interest calculator

25,412. Rothwell, H. Nov. 16.

Calculating-apparatus. — Apparatus particularly applicable for computing interest comprises two or more concentric cylinders *b* enclosed in a casing *c*, and bearing upon their rims the factors influencing the result. Hinged blocks *d* in the casing, corresponding to the rates at which computations are made, when thrown back expose the results through apertures on the cylinders, which have previously been arranged to bring the required factors in line beneath. The result, which as shown is the interest on £3423 for 100 days at 3¼ per cent, is the sum of the amounts exposed by the block *d*.

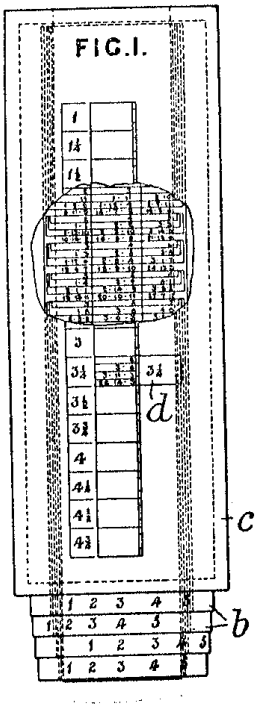

Rowan & Morton 946/1866 Lat & Long

946. Rowan, J. M., and **Morton, A.** April 3.

FIG. 1.

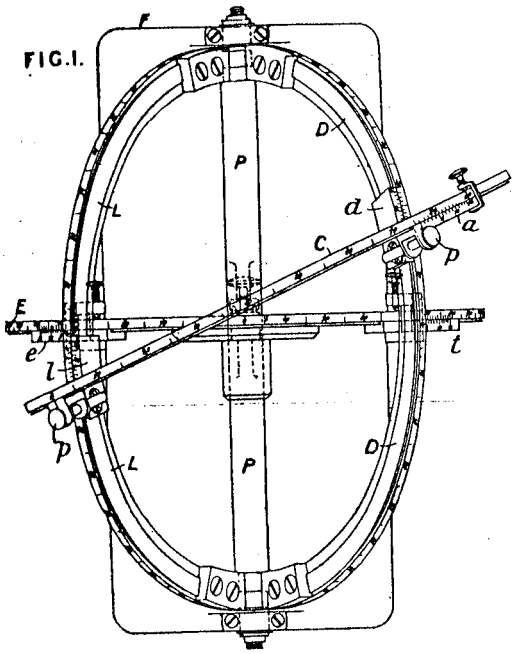

Calculating-apparatus. — Latitude, longitude, and Greenwich mean time are determined from one another and from the altitude of the sun or a star and its position in the heavens as given in the Nautical Almanac, by the apparatus shown. An equatorial ring E and two adjustable latitude arcs L, D are mounted on a polar spindle P carried by a frame F. An altitude arc C has two pins *p* to engage verniers *l*, *d*, *a* arranged as shown. Verniers *t*, *e* also are provided. In determining the latitude and longitude from two altitudes of the sun or the altitudes of two stars, a third latitude arc and two altitude arcs pivoted together may be used. A globe may be placed in the centre of the instrument. In a modification a fixed latitude segment and a loose latitude segment with clamping screws, are carried by a spindle, the altitude arc being used as an equatorial ring also.

1

Rowbotham & Malins 26710/1906 Tab calc

26,710. Rowbotham, J. E., and **Malins, J.** Nov. 24.

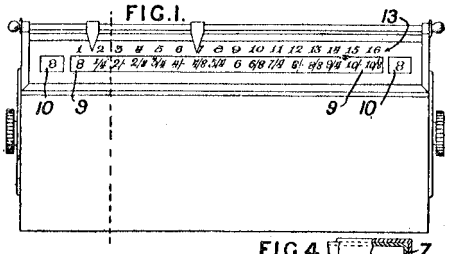

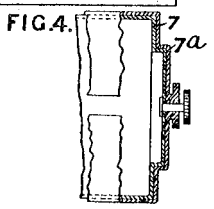

Calculating - apparatus.—A cylinder, revoluble within a casing by means of milled wheels upon its spindle, carries a ready-reckoning table, one line of which is visible through the slot 9; the arguments are furnished by numerals upon the cylinder showing through windows 10 and by a fixed argument scale 13 provided with adjustable pointers. There may be one or more such reading slots; in a modification, Fig. 4, there are several concentric table-bearing cylinders 7, 7^a, the numbers upon the inner tables being read through the slots in the casing and outer cylinders when in line. The table may alternately be mounted upon a fixed plate, and may be provided with a movable argument slide.

[Reference has been directed under Patents Act, 1902, to Specifications No. 22,240, A.D. 1895, No. 3276, A.D. 1900, No. 951, A.D. 1901, and Nos. 4709 and 17,035, A.D. 1904.]

107

Rowland D 6528/1833 Manufacture of Sextants, Quadrants, Circles, Chrono abr Full

ROWLAND. 20th Dec. 1833.

6528. A grant unto DAVID ROWLAND, of N° 68, Crawford Street, in the parish of Saint Mary-le-bone, in the county of Middlesex, mechanic, for his invention of "An improvement in the manufacture of sextants, quadrants, circles, and other instruments used in taking observations and surveys"; two months. By writ, &c.

A.D. 1833, December 20.—N° 6528.

ROWLAND, DAVID.—"An improvement in the manufacture "of sextants, quadrants, circles, and other instruments used in "taking observations and surveys."

This improvement "consists in combining together two sets of "the operative parts of sextants, quadrants, circles, or any other "reflecting instrument, consisting of any other portion of a circle, "so as to form a double or compound reflecting instrument, each "operating part of which may have the same range as the other, "but the two sets of operative parts will act in opposite directions." "The object and effect of thus constructing a reflecting instrument "with such additional operative parts is to enable the observer to "divide a large angle into two smaller angles, and measure both

See [14]

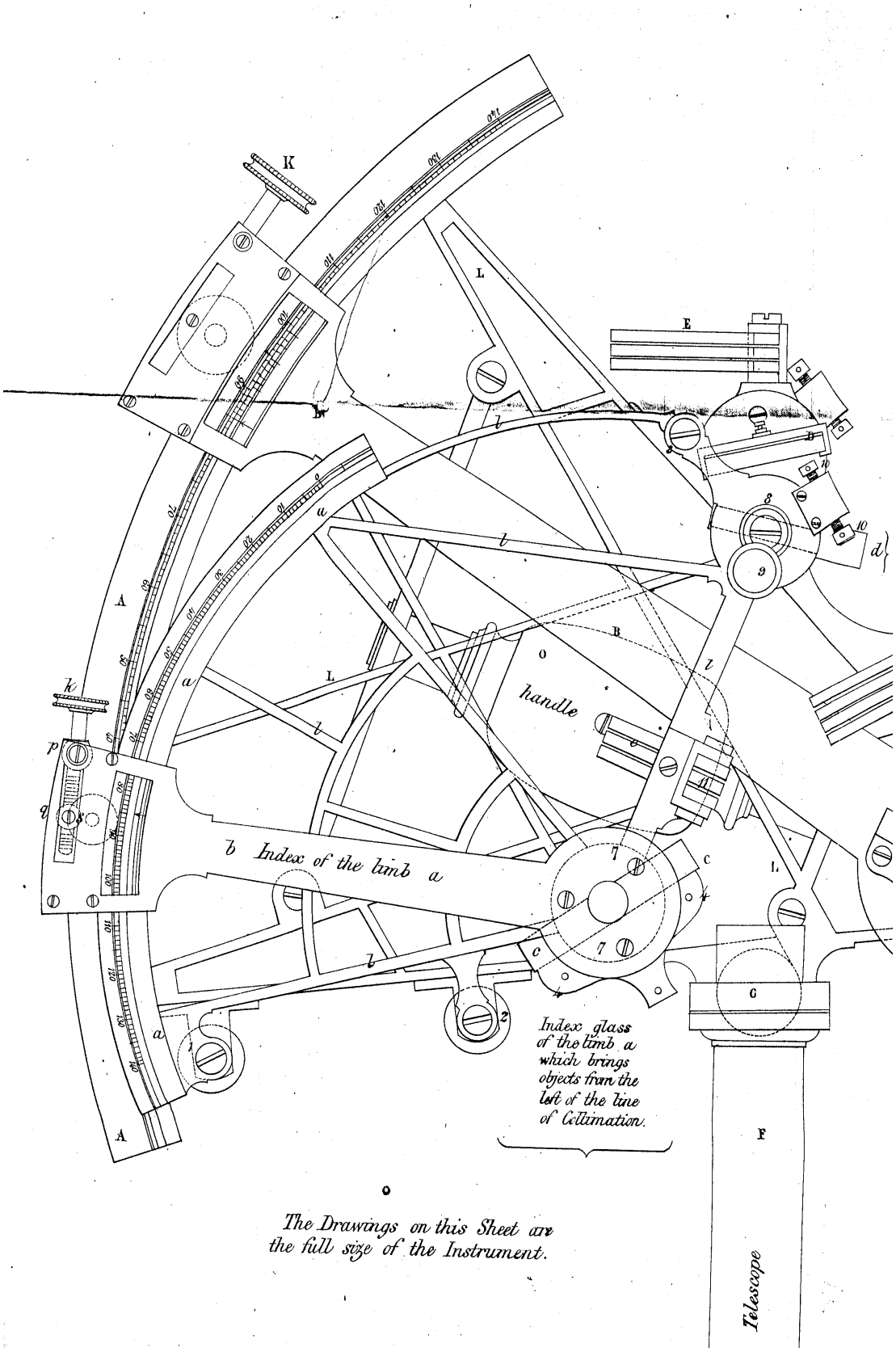
K
L
E
A
B
handle
b Index of the limb a
Index glass of the limb a which brings objects from the left of the line of Collimation.
G
F
Telescope
The Drawings on this Sheet are the full size of the Instrument.

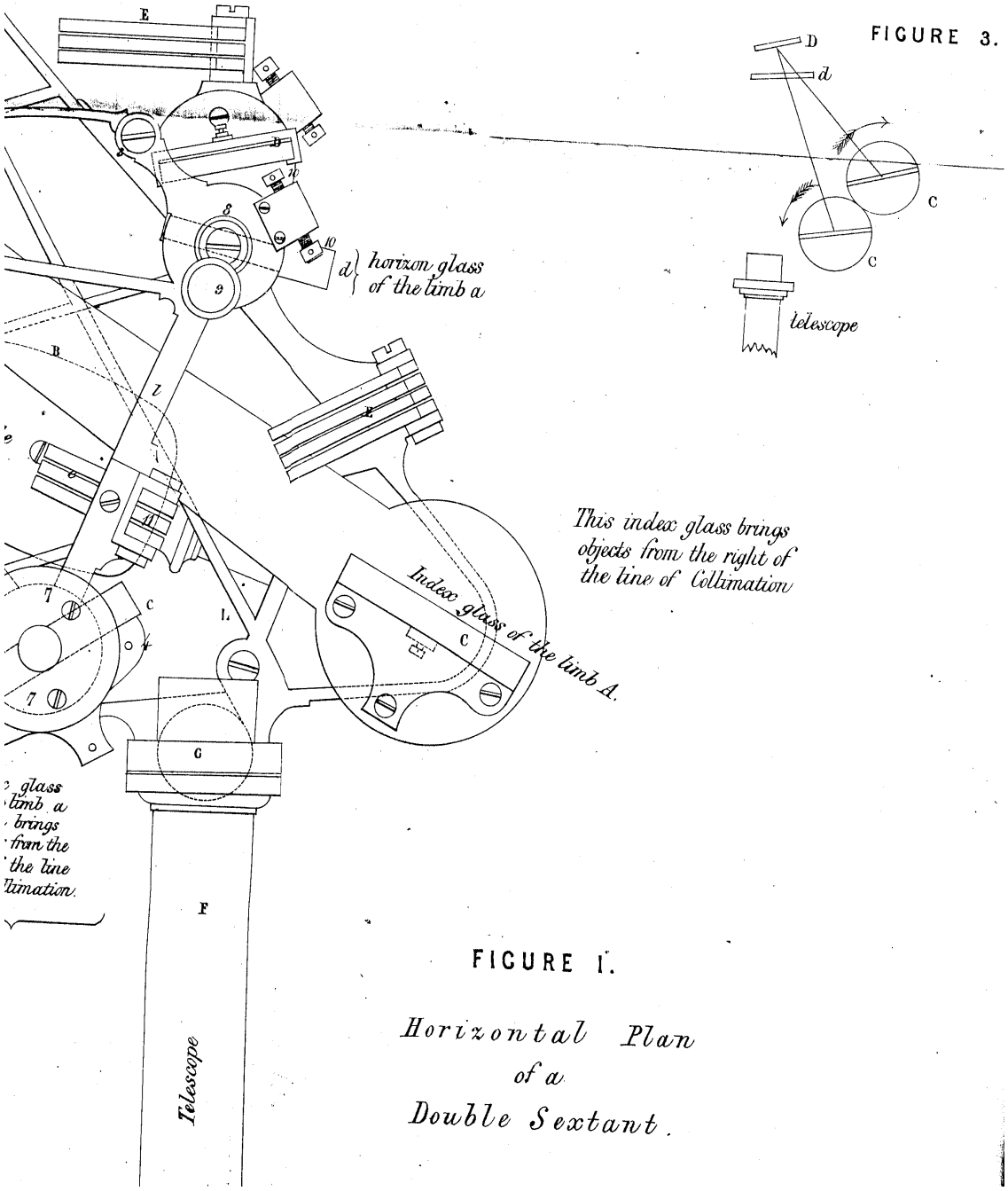

FIGURE 3.

FIGURE 1.

Horizontal Plan of a Double Sextant.

Side View of a Double Sextan

FIGURE 2.

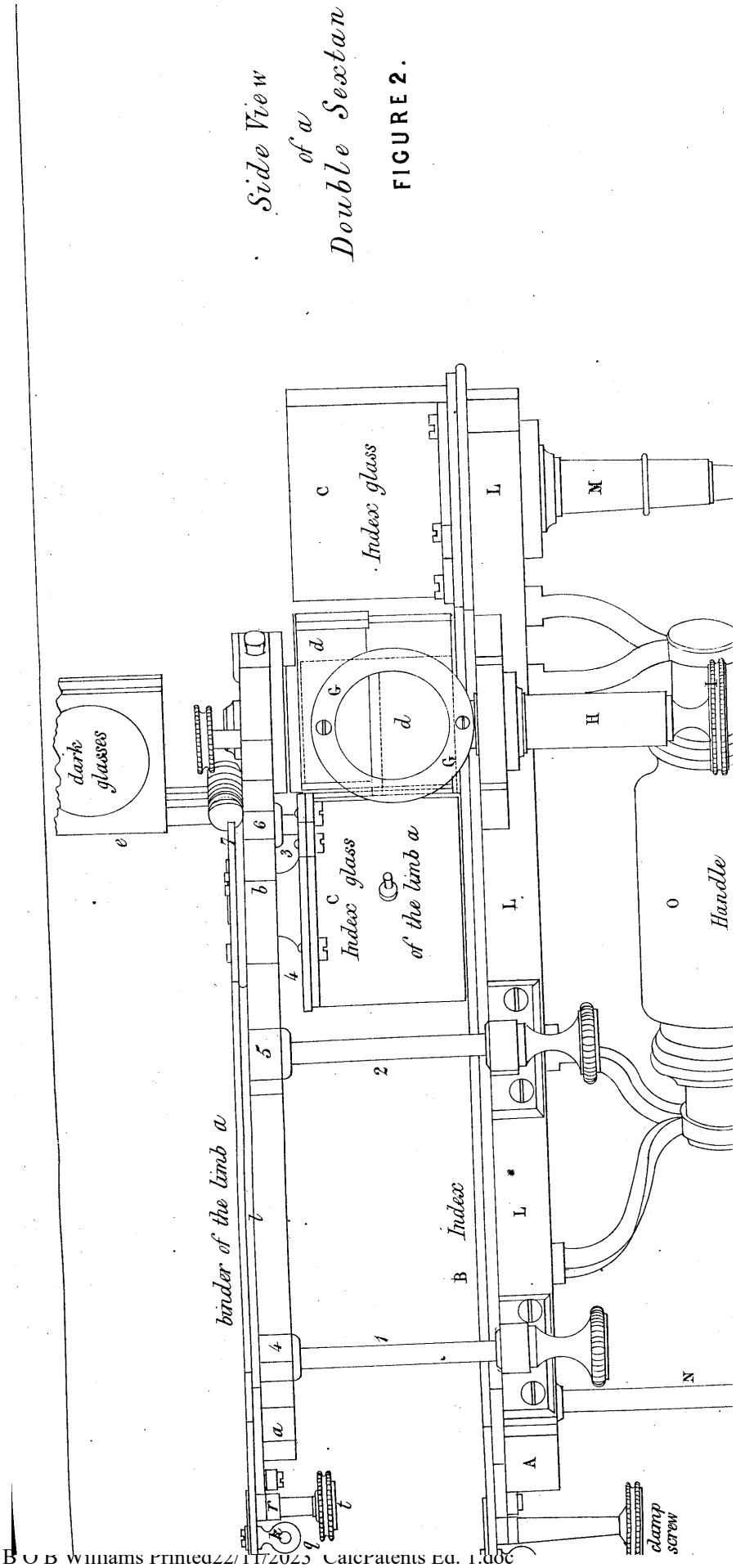

Rumble H H 14527/1890 Adder £sd farthings

14,527. Rumble, H. H. Sept. 15.

Calculating-apparatus.—Relates to an adding-machine. Figs. 1 and 2 show respectively complete and partial views in opposite directions of a transverse section. Figs. 4 shows a longitudinal section of Fig. 2. The amounts are summed on peripheral numbering-wheels *a*, operated separately from key levers beneath and connected together by carrying-mechanism. The key levers take the form of a nest of rectangular frames *p* on pivots p^1 upon standards *q*. Each is connected by a U-piece *o* with a rack *n*, which gears with a pinion *m* fast to a clutch disc a^2 associated with a numbering-wheel. The clutch disc occupies the interior of the numbering-wheel, and has bevelled peripheral recesses a^3 containing balls a^4, which jam when the disc is rotated in one direction, but ride loose on reversal. The carrying is performed by ratchet-wheels *g* and levers *h*, operated by pins *l*. With the exception of the key levers for farthings and tens of shillings, all the key levers are operated by a movable row of nine keys *s* mounted in a keyboard *t*, with play proportioned to the nine digits. A farthing, a halfpenny, three farthings, ten shillings, and tenpence and elevenpence are added by using separate keys s^1 in a fixed keyboard.

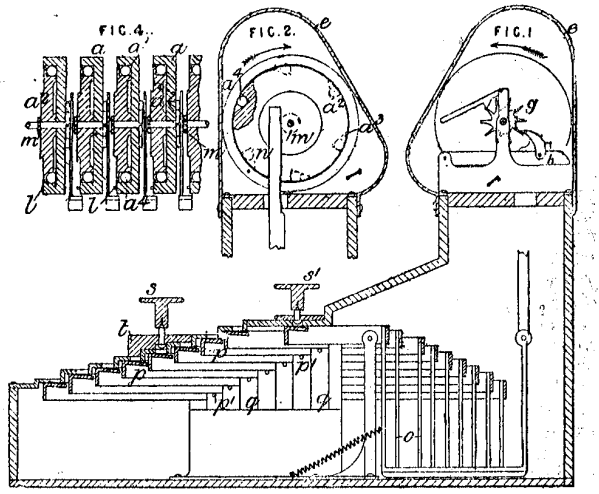

© B O B Williams Printed22/11/2023 CalcPatents Ed. 1.doc

Rouget J R 20274/1904 Stylus adder

20,274. Rouget, J. R. Sept. 21, A.D. 1903, [*date applied for under Patents Act, A.D. 1901*].

FIG.1.

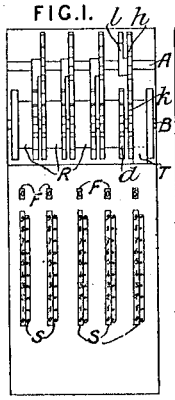

FIG.2.



Calculating-apparatus.—In the adding-machine shown, the figures registered are borne by metallic tapes which are set by means of a style, and pass without slip around pulleys on the spindles of the transferring-gear. The result is read through the windows F, and below each window is a slit S provided with a fixed metal scale whereby the style may be inserted into the proper hole in the tape T and a corresponding motion given to it. These holes engage with small projecting pins on the pulleys R, which are mounted loosely on the spindle B and have attached to them spur-wheels *k*, gearing with others *h* on a countershaft A provided with fingers *l* for moving at the transferring-points the spur-wheels *d* fixed to the pulleys of next higher order. The tapes pass around guide-pulleys C at their lower ends, and are marked with figures on the left and the corresponding pinholes on the right.

Runge E 4425/1896 Adder

4425. Runge, E. Feb. 27.

Calculating-apparatus.—A row of spring keys a is provided which, when depressed, operate the number disc e more or less according to the amount of depression. This operation takes place through the following gear :— Sectors a^3, b^1, pawl b^3 driving the ratchet c in one direction only, toothed wheels c^2, d^1, and e^1. The sector b^1 carries an arm b^2 which travels between two arc-shaped bands f, f, Fig. 5, and the movement is limited by moving to the left the knob f^6, of which there are nine numbered 1 to 9, according to the amount to be added or subtracted. Each knob is attached to a cross-bar f^3 sliding through holes in the arcs f, and when any knob is moved to the left a stop finger f^4 is interposed in the path of the arm b^2. Carrying is effected by a pin on each wheel between 9 and 0 gearing with a toothed wheel connected rigidly to another which gears with the wheel e^1 of the next higher denomination. Each numbering-wheel e has two sets of numbers arranged in opposite directions for addition and subtraction respectively. The cover h^1 with apertures h can expose either set as required. When the limit of the machine has been reached a pin on the last numbering-wheel frees a spring alarm mechanism and announces the fact. To prevent racing of the wheel e the spring rod k is provided the cam head of which k^1 striking the finger f^4 forces the rod into the teeth of the ratchet at the moment its motion should cease. Sliding bolts, which may be actuated separately but can be withdrawn simultaneously, are fitted by the side of each key to lock it against movement when desired.

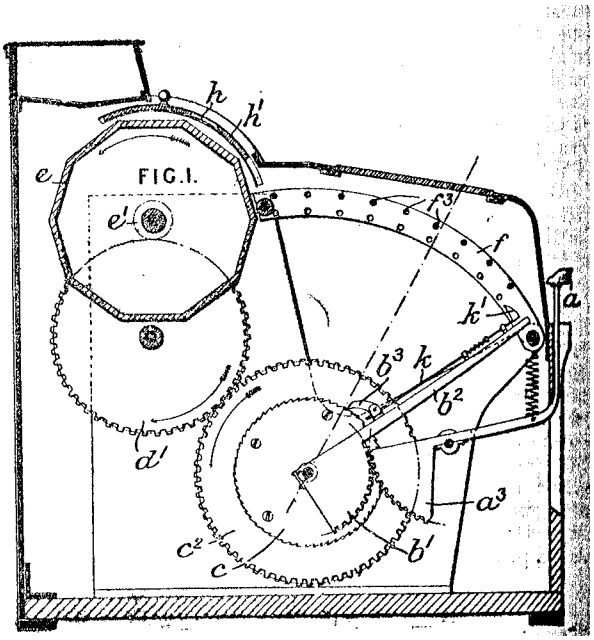

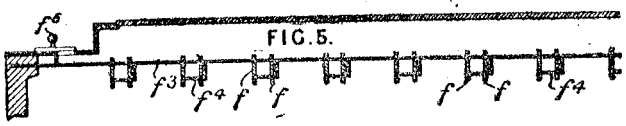

Russet E W De 13293/1893 Ship's constants

13,293. De Rusett, E. W. July 8.

Calculating-apparatus for ship's constants. Curves of stability and draughts and displacements are ascertained from models provided with adjustable ballast and top load. The particulars are as follows :—For the curves of stability, the model M is set in a graduated float-ring H with its centre of gravity coinciding with

FIG. 3.

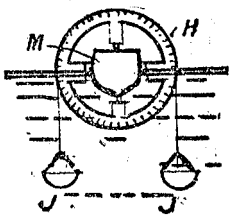

the ring's centre, and is immersed to the required amount by loading scale pans J suspended from the ring. Weight is then transferred from one scale pan to the other, and the simultaneous differences of weight and angles of heel are observed, whence the curve of stability for the given displacement can be plotted. The method may be modified by suspending the ring from another and having the scale pans in the air. The draughts and displacements are ascertained by floating the model when balanced on a steelyard. The movement of the steelyard over a graduated arc is said to show the draught, and the displacement is read on the steelyard by a sliding weight which is shifted till the steelyard points again to zero on the arc.

Saint –Yves J A de 14377/1904 Scales for music architecture etc

14,377. Saint-Yves, J. A. de. June 26, A.D. 1903, [*date applied for under Patents Act, A.D. 1901*].

Computing-scales. — Means or designing-scales for use in "applying the musical scale to "architecture, the fine arts, graphic and plastic trades, "and industries" are shown in Figs. 2 and 4, an example, a vase designed by the use of the scales, being shown in Fig. 13. The musical scale or "archeometrical standard," Fig. 4, is represented on a rule bearing a double series of numbers forming a double proportional scale intended for use in calculating æsthetical proportions. The scales are made of transparent or translucent material, and are provided with longitudinal grooves in the middle. Fig. 2 shows an instrument composed of concentric zones of "equivalents," comprising a double zone of degrees, a double zone of numbers, a double zone of musical notes, a double zone of colours, and a double zone of cosmological signs.

(*For Figs. 4 and 13 see next page.*)

FIG.2.

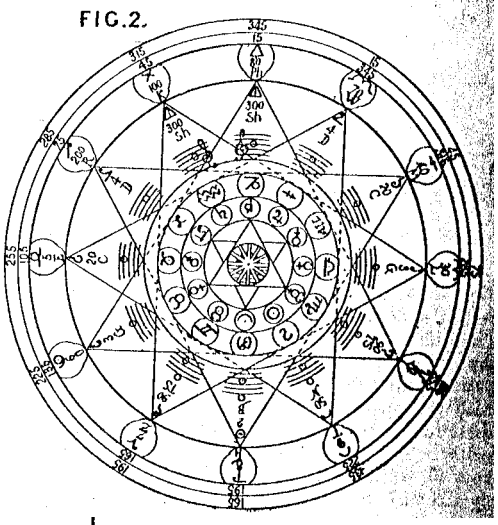

14,377.

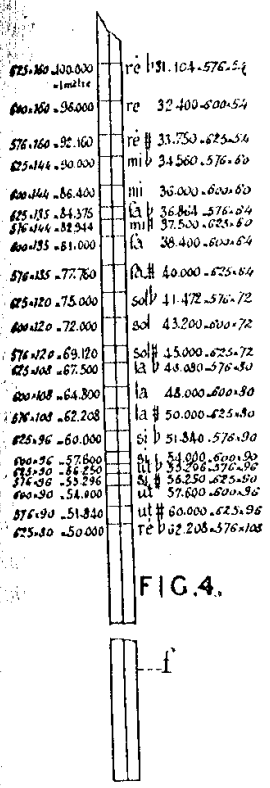

FIG.4.

FIG.13.

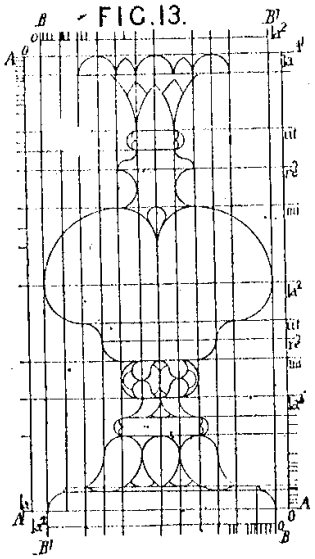

Salcher A 23173/1906 ASMD

23,173. Salcher, A. Oct. 19.

FIG.9.

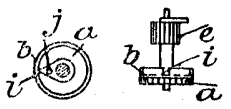

FIG.14.

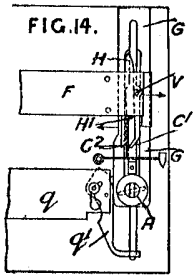

FIG.15.

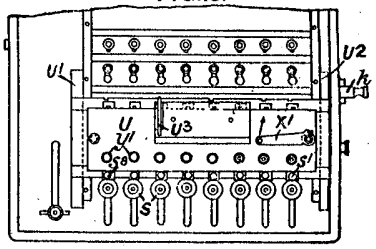

FIG.7

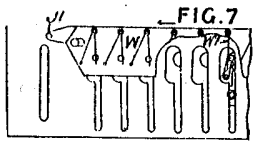

FIG.1.

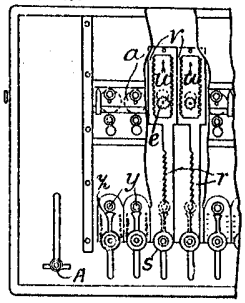

FIG.19.

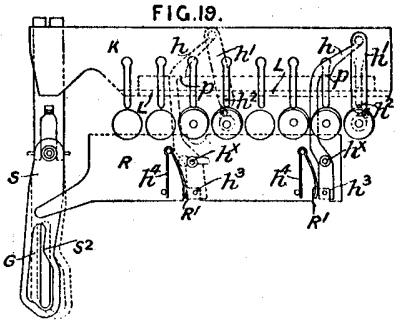

Calculating-apparatus; counting-apparatus.—Relates to a multiple-bank, rack-set and operated adding and subtracting-machine, a device being provided to facilitate multiplication and division by repeated addition and subtraction. The general construction of all the features of the apparatus is new. Fig. 1 is a plan of the apparatus showing the toothed racks which actuate the counter. Fig. 14 is a view of the underside of the machine, showing the hand-operated slide G which causes all the necessary movements of the mechanism after setting the racks. The toothed wheels *e* on the spindles of the numeral wheels *a*, Fig. 1, are situated between the racks *u*, *v* carried by each setting-bar *r*, and are moved laterally into engagement with either one rack or the other, according to whether addition or subtraction is to be performed. A number is set up on the machine by drawing down the racks *r* through distances proportional to each digit, the number set up being indicated by pointers *z* and also by numeral wheels *y*; the bars *r* are retained in position by pawls acted on by springs w^1 mounted upon a laterally movable plate W, Fig. 7. The slide G, Fig. 14, is then moved upwards by means of the knob A, which is guided by a slot as shown in Fig. 1; a wedge H connected to the slide forces the pin V on the frame F, Fig. 14, in which the numeral wheels *a* are mounted, to one side or the other to put these wheels into engagement with either of the racks *u*, *v*; the knob is turned a little to select the side of the pin V with which the wedge engages. The transfer device, which is normally locked, is then released and set in position for operation, as described below, and finally the knob A rocks a lever to which the bar W is pivoted at J^1, Fig. 7, to move the bar W laterally and release

Salcher & Werle 6657/1909 Adder

6657. Salcher, A., and **Werlé, N.** March 19.

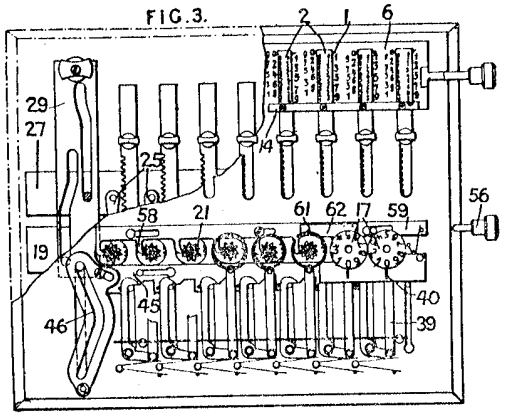

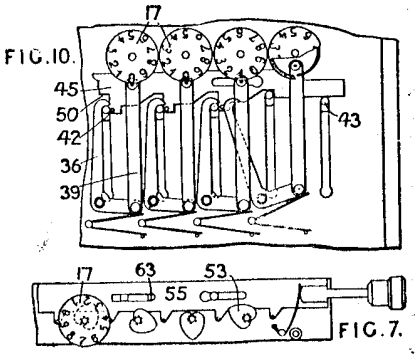

Adding - apparatus.—The apparatus is of the type comprising manually-set indicator-bars, the return movement of which actuates the numeral wheels. Addition is effected in the usual manner, and subtraction by the addition of complementary numbers, a special arrangement being made in the case of the units. The indicator-bars 2 are first set by the aid of a pointer 1 and a sliding plate 6 bearing two series of numerals as shown in Fig. 3, one set for addition and the other for subtraction. A slide 29 is then pulled down and, by means of slot-and-pin connexions, operates first the bar 19, thus moving the pinions 21 attached to the numeral-wheels 17 into engagement with the racks carried by the indicator-bars, and subsequently slides the bar 27, thereby disengaging the pawls 25 from the indicator-bars. The spring-controlled indicator-bars thereupon return and actuate the numeral-wheels. The return movement of the slide re-engages the pawls 25, and disengages the numeral-wheels.

Transfer - mechanism.—The movement of the slide 29 also rocks a slotted lever 46, which moves a slide-bar 45, Fig. 10. Pins 42 thereon, which normally assist in preventing spring-controlled elbow-levers 36 from rocking, as shown in Fig. 3, are thus moved to the left, and, if at this moment a slot situated between the numerals 9, 0 in the under edge or rim of the numeral-wheels is positioned so that a pin 40 on a link 39 can enter it, the lever 36 rocks as shown in Fig. 10 in the case of the units, and allows a pin 43 on the indicator-bar to enter a bevelled slot 50 in the bar 45. An excess movement to the extent of one tooth is thus given to the particular indicator-bar affected. The return movement of the bar 45 resets the indicator-bars to normal position.

Zeroizing-mechanism.—The numeral-wheels are zeroized by means of a handle 56 attached to a slide 55 bearing pins which rotate heart cams 53, attached to the numeral wheels, to the zero position. The slide 55 by means of a spring coupling 61, 62 and a stud 63 at first moves the slide 59, thus disengaging detents 58 from the pinions 21 of the numeral-wheels. When, however, in the latter part of its movement the cams 53 reach their zero position, the bar 59 is automatically released, and again locks the numeral-wheels in this position.

Subtracting is effected by the method of adding complementary numbers, which are marked both upon the bars themselves, so as to appear through apertures in the cross-bar 14 carried by the slide-plate 6, and are also provided upon the slide-plate, the series not in use being obscured in part by the indicator-bars. The units indicator-bar may be drawn out, in the case of subtraction, one unit further than for addition, the complementary figures being displaced for this purpose.

Salomon A & Wimpenny W H 7546/1905 Slide rule for stock yield

7546. Salomon, A., and **Wimpenn W. E.** April 10.

Calculating-apparatus.—Slide rules for computing the yield of stock according to the price and rate per cent of securities have logarithmic scales of rate per cent a, a^1 upon the fixed part and similar scales of prices b, b^1 upon the slide. In a circular modification, either a movable disk bearing one scale is surrounded by a fixed outer scale, or both scales are fixed and are read by the aid of pointers.

FIG. 1.

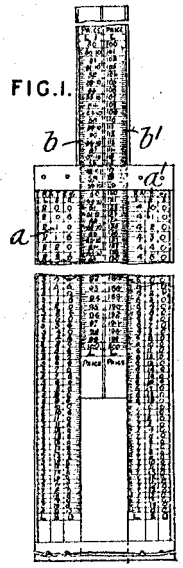

Salomon D 22630/1891 Issuing tickets

22,630. Salomon, D. Dec. 28.

Tickets, issuing.—The tickets are ejected one by one from the bottom of piles X in a receptacle m^5 by means of slides G operated by key-levers B, B^2 pivoted at C. Figure type B^5 on the undersides of the keys print the values discharged upon a paper strip, drawn onwards by feed-rollers R, S, receiving actuation by a ratchet from a yoke N under the key-levers. The piles of tickets are

221

weighted, and the weights are connected to external indicators *n* which rise as the piles lessen.

FIG. 2.

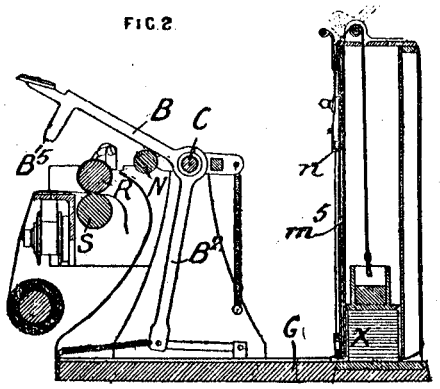

Salomon D 4279/1892 Print receipts

4279. Salomon, D. March 4.

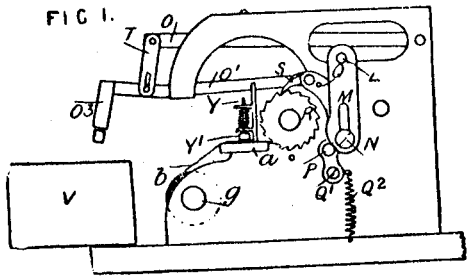

Receipts, checking and recording.—The amounts are printed upon bills, and upon a record strip, on the operation of key levers. The key levers O are connected by links T to levers O^1 having type in arms O^3 which print the bills in a box V. The record sheet *b* led from a roll *g* over a table *a* is printed simultaneously by type Y^1 on spring stems Y struck by the type-levers O^1. The feed-rollers for the paper sheet are operated in the following way :—The key levers depress a yoke M slotted so as to slide vertically on guide-pins N, and pushed laterally by a cam so as to move a lever Q, with bearing-pins P, about its fulcrum Q^1. In this movement, a pawl S on the lever drives forward a ratchet-wheel R upon one of the rollers. As the cam recedes again, the lever Q is pulled back by a spring Q^2, and the pawl takes up another tooth.

Salomon D 22445/1892 Deliver money & calculate

22,445. Salomon

FIG 4.

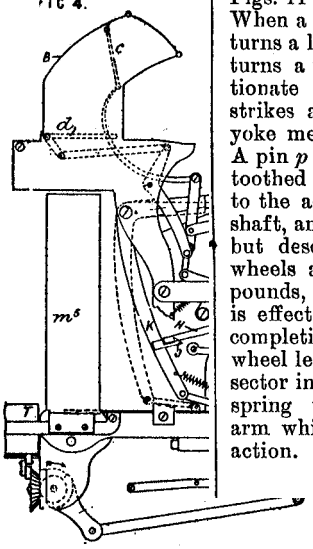

opened and closed synchronously with the pull and return of the hand-lever, while the upper one is flapped at the end of the return.

Calculating - apparatus. — Adding - mechanism, Figs. 11 and 16, is operated by the printing-keys. When a key *o* is struck a draw-bar *e* jointed to it turns a loose tappet *j* on a shaft *k*, and the tappet turns a yoke *s* through an angle which is proportionate to the value of the key, since the tappet strikes an adjusted screw *s* in the yoke, and the yoke meets an adjusted stop *h* on the draw-bar. A pin *p* at the end of the yoke engages a slot in a toothed sector which gears with a pinion attached to the adding-wheels. The sector has play on its shaft, and is pushed into gear on the up-stroke, but descends free. There are separate adding-wheels and sets of keys for pence, shillings, and pounds, and carrying from the former to the latter is effected by the device shown in Fig. 16. In completing its revolution a pin r^1 on the pence-wheel leaves an arm *v* held by a latch v^7, but the sector in descending knocks up the latch, when a spring pulls back the arm and a companion arm which drives the shillings-wheel by ratchet action.

Receipts, checking and recording. — Relates to a combination of the money-delivering apparatus described in Specification No. 22,630, A.D. 1891, with the receipt-checking apparatus described in Specification No. 4279, A.D. 1892, and additions. A cam plate which, in the latter invention, is operated by the printing-keys and in turn operates the feed-motion for the record paper, is now also shaped to unlatch a yoke H from hooks J on the change-giving levers K of the first invention, which otherwise cannot be operated. The yoke thus raised is engaged by a catch G, and the change, after being ejected from the piles m^5 into a shoot T, is delivered to the customer by pulling over a hand-lever A which tilts the shoot T by action through cranks and connecting-rods and mitre-wheels. A pin E on the hand-lever forces the catch down to let the yoke re-engage the change levers. The operation of the hand-lever also simultaneously lowers the pile of bills in the container V by driving a ratchet slide A^4, which is joined by a link Z^4 to a pivoted lever Z, the down motion of which pulls down a false bottom in the container; when the hand-lever is put back a spring returns the bottom lever. The coins received in payment are passed into the change columns through show shoots B provided with two traps *c*, *d*, having link and lever trains for operation by the hand-lever. The lower trap is

FIG 11

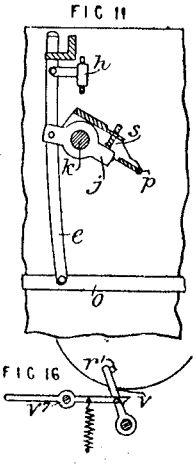

FIG 16

Salomons Sir D L 3615/1888 Photo exposure

3615. Salomons, Sir D. L. March 8.

FIG.1.

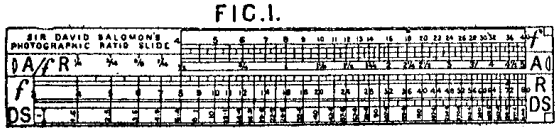

Slide-rules specially graduated to calculate the rapidity of photographic lenses. The scale f is a logarithmic scale of focal lengths, the scale on the slide A is a logarithmic scale of the apertures of the lens or stops, and the scale R is a logarithmic scale of numbers which denote the ratios between the focal length and the apertures. The figures corresponding to the different ratios on the Dallmeyer standard are marked on the scale DS, and those corresponding to the Photographic Society's standard are marked in the bottom of the groove in which the slide A works. The ratio of any given aperture to any given focal length is determined by setting the slide in the usual manner of operating the slide-rule. A scale is drawn on the edge of the rule for measuring the diameter of stops.

Samuel E 12682/1907 Adder printer

12,682. Samuel, E. June 1.

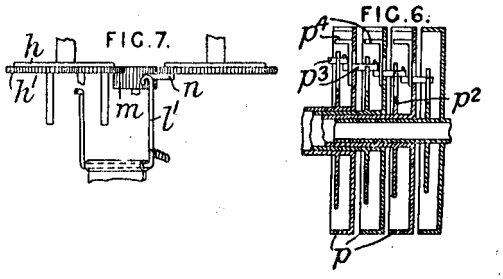

Calculating-apparatus. — In an adding-machine provided with printing-means and operated by

530

Santen H H van 133622 of 1919 Computing scales for wages

133,622. Santen, H. H. van. April 28, 1919.

FIG. 1.

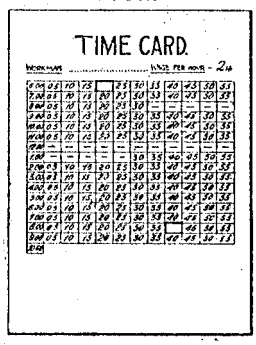

FIG. 2.

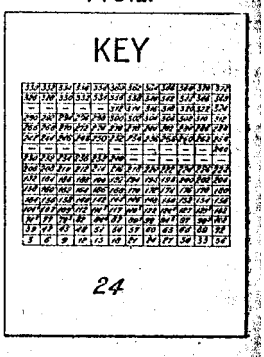

Computing-scales. — A device for determining the value of elapsed time as shown by two perforations on workmen's cards, which are divided as shown in Fig. 1 into hour and five-minute periods, comprises a series of similarly divided cards having the wages corresponding to the elapsed periods arranged in reverse order as shown in Fig. 2. Each card corresponds to a given hourly rate of wages so that, by placing the time card face downward on the value card, the wages can be ascertained by simple subtraction of the numbers shown at the apertures. Specification 18776/07 is referred to.

Sargent H N 24980/1912 Speed of troops

24,980. Sargent, H. N. Oct. 31. [*Addition to* 6154/12.]

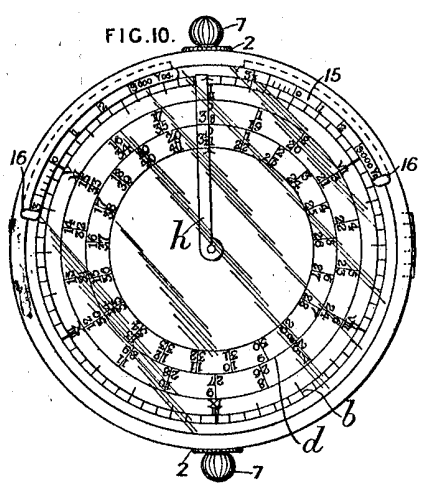

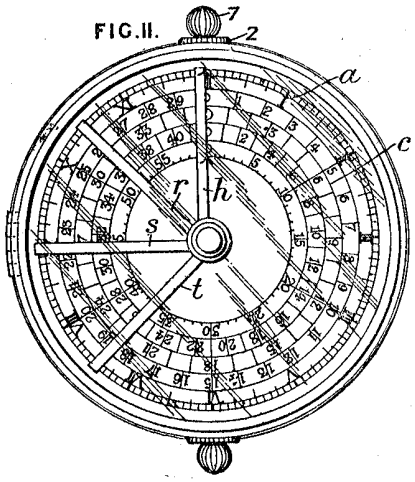

Computing speed and position of moving bodies.—The apparatus described in the parent Specification for computing speed, time, and distance in problems involving the movements of trains, motor-vehicles, columns of troops, &c., is provided with graduated indicating-arms *h*, Fig. 10, segmental time-distance scales 15, 16, and, if required, with pointers or arms *r*, *s*, *t*, Fig. 11, movable relatively to the rotatable transparent covering-disk. The apparatus is assembled in a casing as shown in Fig. 9, comprising two hinged half-cases *x*, *y*, each of which has two complete sets of apparatus, one viewed from the outside, and the other displayed when the casing is opened. Each of these sets comprises different rate scales *c*, *d* adapted for use, respectively, in problems relating to moving columns, motors,

© B O B Williams Printed22/11/2023 CalcPatents Ed. 1.doc

Saunders H B 26013/1904 Multiplier

26,013. Edwards, A. E., [*Saunders, H. B.*]. Nov. 29.

Calculating-apparatus.—A key-set multiplying-machine is shown in plan in Fig. 3, in horizontal sections in Figs. 4 and 6, and in transverse section in Fig. 9. The machine is adapted to make actual multiplications, and not repeated additions, the multiplicand and the multiplier being set upon the banks 12 of depressible keys. Fractions can be set both in the multiplicand and in the multiplier. The multiplicand keys 13 control the shafts 47, 47^a, 47^b, 47^c, and the rack-bars 46, which have their teeth 51 in mesh with the gears 54 of the primary calculator discs 53, so that the movements determine the degree of rotation of the calculator discs. The discs 53 serve to regulate the movement of the finger-bars 68, and together with the check lever 79 serve to hold the rack-plates 73 normally out of the path of the counting-pinions 74. The multiplier keys 13^1 control the shafts 47^d, 47^e, 47^f, and the rack-bars 45 which have at their rear ends the spurs 50. When the power lever 138 is actuated, the rack-bars 46 move forward and rotate the calculator discs 53, and the rack-bars 45 move into contact with the pins 52 and move forward, giving the discs 53 an additional rotation. The four series of rack-bars 46 and the governing rack-bars 43, which control them, are acted upon by the master-bar 35 of the actuating-mechanism. The bars are brought back to normal position by the return movement of the trip bar 33. The primary calculator discs 53 are mounted in groups on composite hubs, and are constructed on a circle divided into nine sectors, each sector being subdivided into nine sub-sectors. The function of the spur 50, after the rack 51 has determined which of the sectors of a disc 53 is to be acted on by the finger-bar, is to determine which of the sub-sectors of that sector is to be brought into line with the finger 67 of the finger-bar 68,

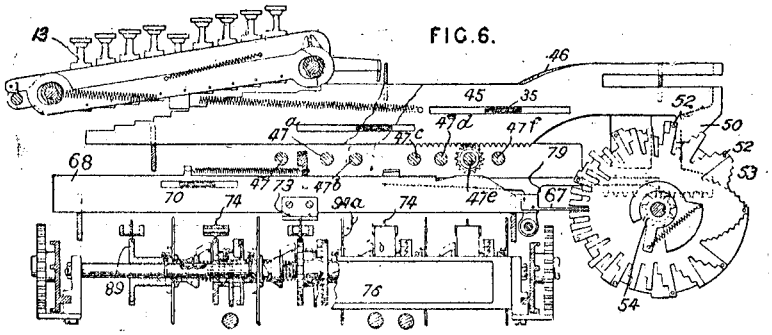

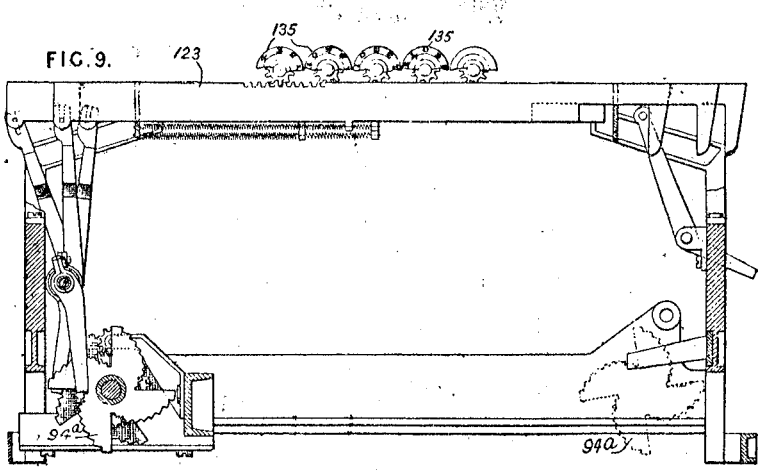

Mor e omitted see US

Savage R W 3701/1894 Photo exposure SR spiral

3701. Savage, R. W. Feb. 21.

FIG. 3.

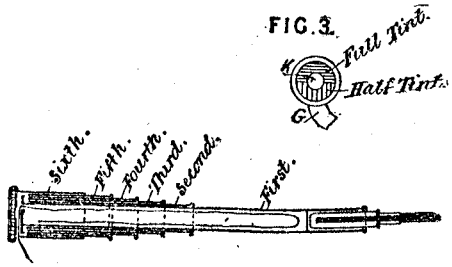

FIG. 4. *Section*

Calculating apparatus.—Relates to a spiral slide rule apparatus for calculating photographic exposures, in which the logarithmic scales form the case of a pencil holder. In the section shown at Fig. 4, the series of six tubes shown screw into each other and have spiral logarithmic scales graduated to represent the usual factors for calculating the time of exposure for any required plate. The movement of the tubes with the scales may, in some cases, be longitudinal instead of spiral. The actinic value of the light is determined by exposing at the end of the pencil case a section of a strip of sensitive paper G stored in the inner tube. Near the aperture K, Fig. 3, where the sensitive paper is exposed are two standard colours, one of which is half the density of the other. In dull light the lowest standard is used.

Sawyer F L 7452/1915 Trig calc navigate in fog

7452. Sawyer, F. L. May 18.

Plane-trigonometry calculators.—In connexion with a signalling system to facilitate navigation in fog, wherein the distance of one vessel from another, or from a fixed station, can be found from the time-interval between the receipt at one vessel of two signals simultaneously transmitted from the other, and having different velocities, a device is provided for directly plotting the distance at successive intervals as ordinates, to enable a graphic determination of the probability of collision. Assuming each vessel to keep its course and speed, the rate of diminution in distance between, or rate of approach of, the vessels must be constant for collision to

630

occur, so that the ends of the distance ordinates lying in a straight line indicates danger. A device is also provided whereby the dangerous rate of approach can be determined from the known courses and speeds of the vessels, by a parallelogram of velocities, without actually drawing the parallelogram. This device can also be used to determine the relative positions of the two vessels from the

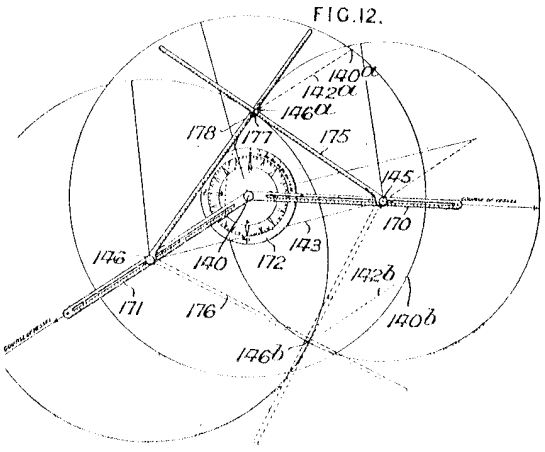

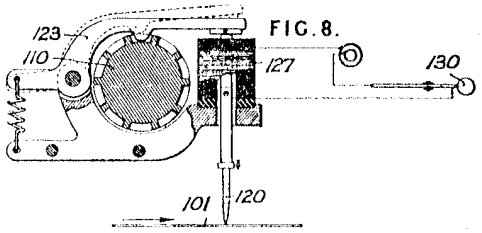

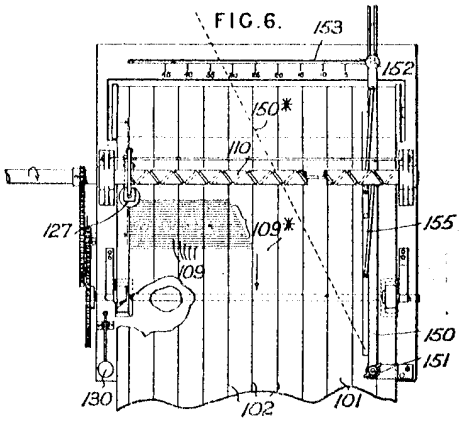

known courses and speeds and two distance observations taken at a known interval. The distance-plotting device has a travelling band of paper 101 with longitudinal rulings 102, and a continuously rotating helically grooved shaft 110. The receiving-operator has telephonic receiving-apparatus carried on a suitable head-piece, and depresses a key 130 when the Hertzian signal is received, thus energizing a solenoid 127 which causes a stylus 120 to contact with the paper 101. A projection on a lever 123, pivoted to the stylus carriage, at the same time engages one of the helical grooves in the shaft 110. The stylus is thus traversed across the paper until the key 130 is released on receipt of the sound signal, drawing an ordinate 109 which shows, by the graduations on the paper, the distance between the vessels. The stylus carriage is returned by hand or by a spring, and successive ordinates plotted in the above-described way. If the ends 109* of the ordinates lie in a straight line, as shown, collision is probable. An arm 150, pivoted at 151 and having a clamp 152 adjustable along a graduated slot 153, can be moved to a position 150* corresponding to the dangerous rate of approach. If the arm is then parallel to the ordinate ends 109*, collision is probable. To facilitate comparison, a parallel ruler 155 is carried by the arm 150. If desired, this can be used to draw a "danger" line through the end of the first distance ordinate, and the arm 150 then turned back out of the way while subsequent distance observations are made and compared with the line so drawn. The dangerous rate of approach may be found by the device shown in Fig. 12, comprising two slotted and graduated arms 170, 171 pivoted at the centre 140 of a compass card 172 and respectively carrying graduated arms 175, 176 pivoted by clamp devices 145, 146, which can be adjusted along the slots. The arms 170, 171 are adjusted to positions as indicated by the card 172 to correspond to the known courses of the receiving and sending vessels, and the distances of the pivots 145, 146 from the centre 140 are adjusted to correspond with the respective speeds. The line 143 representing the dangerous rate of approach can be measured by either of the arms 175, 176. To determine the relative positions of the vessels when two distance observations have been made, the arms 170, 171 are adjusted to correspond with the courses of the receiving and sending vessels, and the distances of the pivots 145, 146 from the centre 140 are made to correspond with the distances covered by the vessels in the known interval between the two distance observations. An adjustable stop 178 is clamped to the arm 176 so that its distance from the pivot 146 corresponds to the first distance observed, and an adjustable stop 177 is clamped to the arm 175 so that its distance from the pivot 145 corresponds to the second distance observed. The arms 175, 176 are then swung round until the stops come together, giving two points 146^a, 146^b, one of which shows the position of the sending-vessel at the second distance observation, the receiving-vessel being at the point 145. Lines 142^a, 142^b, parallel to the arm 171 and equal in length to the distance between the pivots 140, 146, give points 140^a, 140^b, one of which shows the position of the sending-vessel at the first distance observation, the receiving-vessel then being

Sawyer J 2885/1877 Like Napier's Bones

2885. Sawyer, J. July 28. [6*d*.]

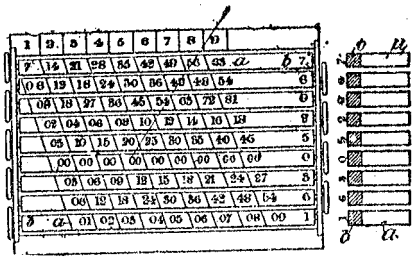

Arithmometers.—Each group *a* of figures consists of figures on strips of suitable material. The strips are all separate pieces, and are ten in number in each group. On the different strips in each group are multiples of 0–9 inclusively. Each group works on a square roller *b* which is held by a spring. Other ways may be employed for mounting the strips, which may, for instance, be mounted in book form. For multiplying, say 769250361 by 98765432, the rollers are turned until the reference figures show 7, 6, 9, &c. The numbers under 2 of the fixed reference board are added up, and the result, 1538500722, written down ; those under 3, 4, &c. are then added up in the same way, and then all these lines of figures are added up as in an ordinary multiplication sum. For division the reverse method is used.

Sawyer J 1642/1878 Like Napier's Bones

1642. Sawyer, J. April 24.

Computing-scales.—Strips of paper are arranged transversely, with numbers placed diagonally, so that by folding back the strips corresponding to the ciphers of any two numbers and adding up the figures exposed, the result of multiplying the two numbers is obtained. One method is as follows :—The numbers 1, 2, 4, 8 are placed on one strip as shown by Fig. 1 with an index figure 1 at the bottom ; on another strip are placed the multiples of these numbers with 2, with an index figure 2, and other similar strips have the multiples up to 9. They are placed one above the other with the index figures exposed, and above them is placed another strip with sets of ciphers upon it. The diagonal lines divide the units from the tens which may be in different colours. The ten strips constitute the first set or pile of strips, and as many piles as required are placed side by side : these are covered transversely by strips in sets of four, successively numbered 1, 2, 4, 8. The mode of using the apparatus may be explained by multiplying 392 by 267, as follows :—Expose to view, in the first-described piles, consecutive strips with the indices 2, 6, 7, and then cover by the transverse strips with the exception of the following :- The strips indexed 1 and 2 of the first set of four, the strips indexed 1 and 8 of the second set, and the strip indexed 2 of the third set. The figures now exposed when added together (the tens being added to the units) amounts to 104, 664 which is the product required.

FIG. 1.

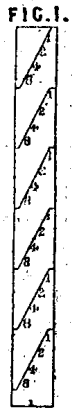

Sawyer J 16088/1891 Multiply on typewriters

16,088. Sawyer, J. Sept. 22.

Calculating-apparatus.—Multiplication of numbers is performed by type-writers, in which each key prints two characters representing the product of two numerals. The two digits of each key are set diagonally on the same block, so that the units and tens of the partial products come in the same vertical line ready for addition, a step-by-step motion being given to the stop which governs the position of the type-carrier.

Saxby S M 1636/1856 Calculating apparatus for solution of spherical triangles

1636. Saxby, S. M. July 10.

FIG. 1.

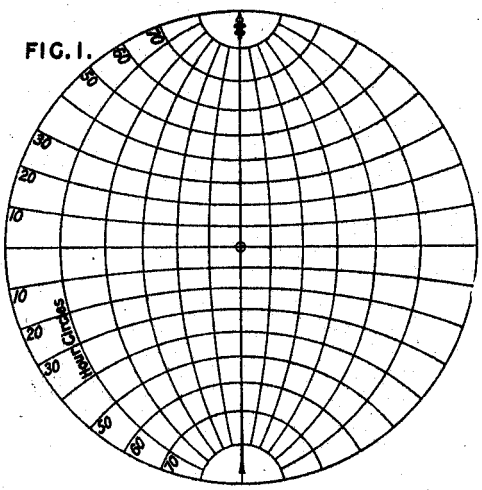

FIG. 2.

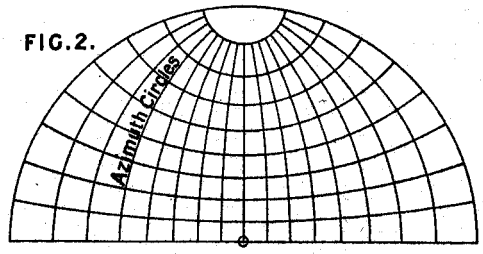

Calculating-apparatus.—Relates to a mechanical device for the solution of spherical triangles specially useful for determining compass errors. A diagram ruled upon the transparent sheet is superposed and rotated upon a second diagram so as to produce an intersection of fiducial lines from which the desired result may be obtained. Fig. 1 shows a diagram for the purpose which is the stereographic projection of the meridians and parallels of a sphere. Fig. 2 is a similar projection of azimuths and almucantars.

SCHAER A 7737/1895 Textile slide rule
ABR to come
SCHAER A 10930/1895 Textile Slide Rule

10,930. Schaer, A. May 31.

Calculating-apparatus.—In testing fabrics a templet graduated as shown is used for readily ascertaining the number of the yarn and the number of yards of fabric to the pound weight, the upper part A of the templet relating to the former calculation and the lower part B to the latter. Referring to the graduation along the upper margin A, a sample cut to the width of the templet should extend from the extreme left to the graduation 25 or 20 &c., according as the ascertained number of picks or counts of the yarn per $\frac{1}{4}$ inch is 25 or 20 &c. Each sample thus cut will contain the same length of yarn, the weight of which divided into a standard number will give the number of the yarn. To ascertain the number of yards of fabric to the pound, the sample cut to the width of the templet is cut in length to the graduation number along the side B, which corresponds to the width of the piece, and the weight in grains is divided into a standard number to obtain the number of yards per pound weight. Additional graduations are given for smaller samples.

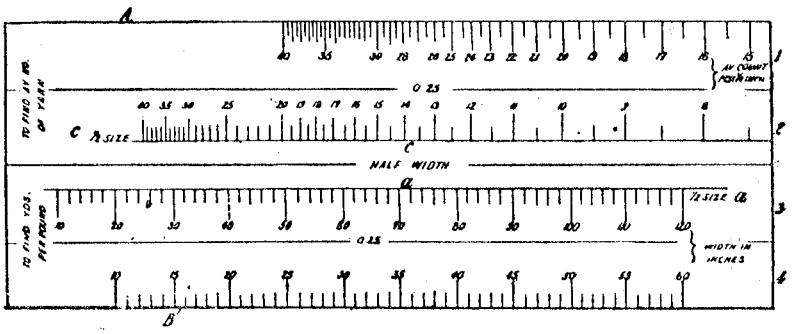

Schabadt A 20998/1897 Add, bands

20,998. Schabadt, A. Sept. 13.

Calculating - apparatus. — A series of endless bands *c* are provided with projections c^1 to be engaged by the finger, which run in slots d^1. On either side of the slot the casing is marked with scales 1 to 9 and 9 to 1 for addition and subtraction respectively, but where the 5 should fall on one side a gap *o* is cut to show the graduations on the band underneath. The bands are marked 0 to 9 three times over, and whenever the band moves so as to change its indication from 9 to 0 in adding or 0 to 9 in subtracting, one of three pins *g* strikes a lever *f*,

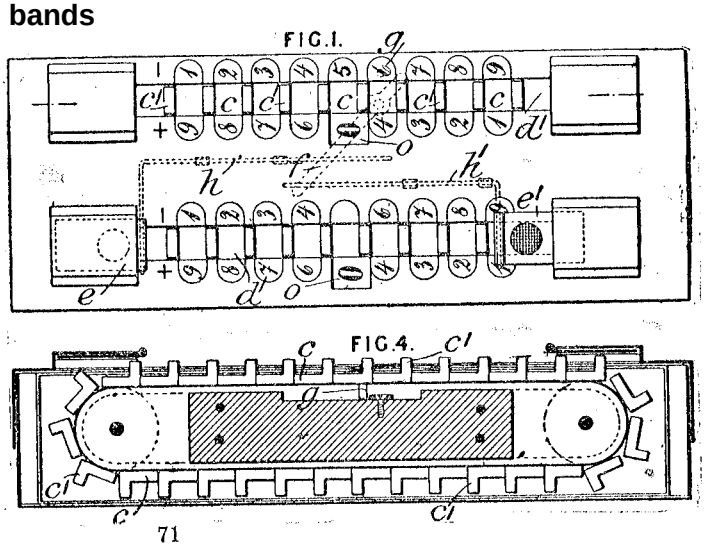

which, acting on the sliding rod h^1 or *h* or its equivalent, throws forward the slide e^1 or *e* over the next band of higher denomination. This indicates that 1 must be added or subtracted on the next band. For example, to add 7 and 8, the finger is placed opposite 7 on the addition scale at the side of the slot d^1 of the units band, and the projection c^1 is forced back to the bottom of the slot. 7 will then appear in the gap *o*. The process is then repeated with 8 and the units band will then show 5 in the gap *o*, while the slide e^1 will have been thrown forward. In pushing this slide back the finger is made to engage the projection c^1 below it and 1 is added to the tens band. By altering the numbers on the bands &c. the apparatus may be adapted for compound addition &c. in various coinage and weights.

Schacht & Westerich 25947/1913 Slide rule for trig

25,947. Cuntz, G. R. F. H., and **Schacht & Westerich.** Nov. 12.

FIG. 3.

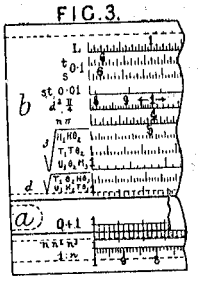

FIG. 4.

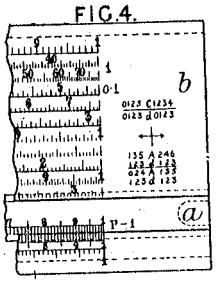

Slide-rules.—A logarithmic rule is provided with a number of scales by means of which the square and cube roots, the areas and circumference of circles, and the values of the sine and other trigonometrical functions can be ascertained; these scales *b* are all set above the sliding member *a*, Figs. 3 and 4, and the square and cube root scales are extended in two or three lines in order to increase the length of the scales without affecting the length of the rule. The rule is provided, as shown, at the right and left hand ends, with marks which determine the position of the decimal point.

See [26]

Schaer A 7737/1895 Slide rule for textile fabrics

7737. Schaer, A. April 17.

FIG.2.

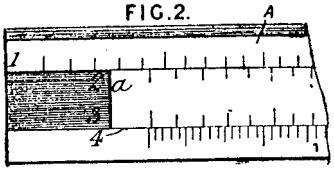

Slide rules for solving problems connected with the manufacture of textile fabrics. The slide *a* and stock A are graduated with four similar logarithmic scales 1, 2, 3, 4, the last of which is reversed. These are marked with terms meaning respectively yards per pound of the cloth, average number of yarn employed, inches in width of the cloth, and average of the number of picks per inch of the filling, and the number of threads per inch of the warp. Given any three of the above, the fourth may be at once read off after setting the rule according to the data given.

Schaer A 10830/1895 Device for testing fabrics

1830. Schaer, A. May 31.

Calculating-apparatus. In testing fabrics a templet graduated as shown is used for readily ascertaining the number of the yarn and the number of yards of fabric to the pound weight, the upper part of the templet relating to the former calculation and the lower part to the latter. Reference to the graduation along the upper margin

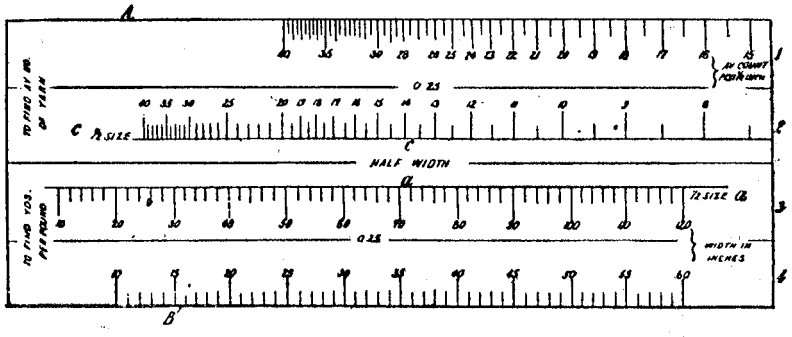

a sample cut to the width of the templet should extend from the extreme left to the graduation 25 or 20 &c., according as the ascertained number of picks or counts of the yarn per ¼ inch is 25 or 20 &c. Each sample thus cut will contain the same length of yarn, the weight of which divided into a standard number will give the number of the yarn. To ascertain the number of yards of fabric to the pound, the sample cut to the width of the templet is cut in length to the graduation number along the side B, which corresponds to the width of the piece, and the weight in grains is divided into a standard number to obtain the number of yards per pound weight. Additional graduations are given for smaller samples.

Schaller C 2007/1914 ASMD machine

2007. Schaller, C. Jan. 27, 1913, [*Convention date*].

Multiplying and dividing apparatus; overthrow-preventing mechanism. — Relates to machines, adapted for the four rules and having a laterally displaceable totalizer carriage for the purpose of varying by powers of ten, in which the keys are arranged in rows and adapted, when depressed, to displace guiding-members into the path of an actuating-means, which is rotated by the main handle and is thereupon deflected by the guiding-members so as to actuate the corresponding numeral-wheel for a greater or less portion of its rotation, depending on the key operated and the number of guiding-members displaced. The keys are provided with stems 1 which have numbers of teeth 3 thereon corresponding in number to the digits on the keys. The teeth 3 are adapted to rock pivoted bars 4, each of which is provided at its free end with a rhomboidal-shaped member 10, these members together forming an annular portion adapted to be displaced laterally into the path of an actuat-

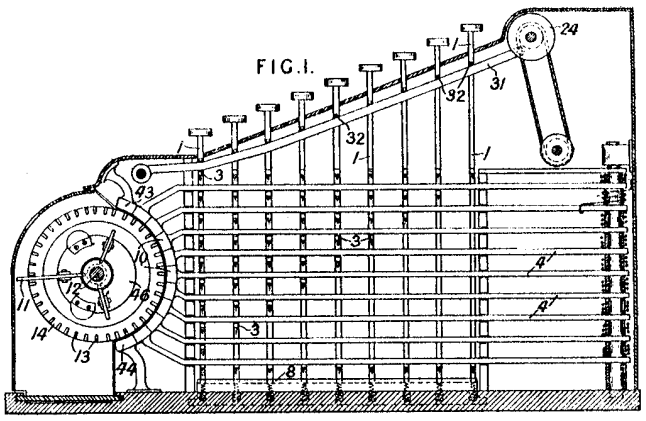

continues

© B O B Williams Printed22/11/2023 CalcPatents Ed. 1.doc

ing member or tooth 11 mounted on a disk 46 upon a spindle 12 rotated by the main handle. A development of the members 10 is shown in Fig. 3, with the numeral key 3 depressed. The

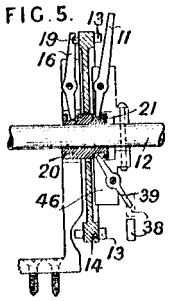

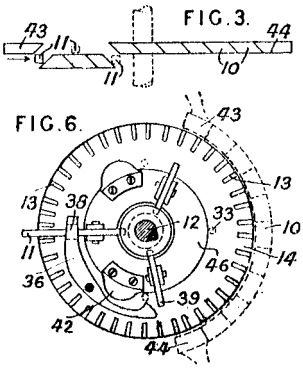

inclined surfaces of the members 10 and of the fixed stops 43, 44 force the actuating-tooth 11 into and out of engagement with the teeth 13 of a numeral-wheel 14 loosely mounted on the spindle 12. Each numeral-wheel 14 is normally locked by means of a lever 16 engaging projections 19 on the wheel and is released therefrom by means of the actuating-tooth, the prolongation of which fits in a groove 21 of a sleeve 20 and slides this sleeve so as to rock the lever 16 out of the path of the projections 19.

Displaying items.—The item set is indicated on numeral-drums 24 actuated by means of pins 32 on the key-stems depressing arms 31, which, through cords, chains, sectors, &c., actuate gear-wheels attached to the drums. A revolutions-counting mechanism may be provided on the carriage which carries the totalizer mechanism. A locking-device 8 is provided for the keys and may be operated by means of a cam on the main spindle or in any well-known manner.

Transfer mechanism.—Each disk 14 is provided with transfer pins 33 adapted at the desired moment to rock a lever 36 so as to bring the laterally bevelled end 38 thereof into the path of arms 39 on the disk 46 of the next higher numeral disk, which is rocked by such bevelled end to displace the sleeve 20 and thereby force the actuating-tooth 11 into the numeral-disk 14 and advance it one step. Cam-pieces 42, which rotate with the shaft 12, are adapted to restore the parts to their normal position. The movement of the sleeve 20 controls also the locking-mechanism for the numeral-wheel, as at actuation.

Scheutz 2216/1854 Calculate and print tables

See[27]

Schmalcalder C A 3545/1812 Mathematical instruments, to measure angles

See **[14]**

A.D. 1812, March 5.—N° 3545.

SCHMALCALDER, CHARLES AUGUSTUS.—"Improvements "in mathematical instruments."

1st. Applying to "instruments for measuring angles of azimuth " or bearing, a three-sided prism having two plain surfaces, " forming an angle of forty-five degrees" " with each other, and " having the third surface ground spherically convex." The angular divisions of the instrument are thus seen by reflection, and the subject of observation by direct vision.

2nd. "The like adaptation and application, mutatis mutandis, " to instruments for measuring vertical or oblique angles, and " also to the spirit level of the levelling instrument."

3rd. Applying to the above-mentioned instruments "a four- " sided pyramid having a square base, and two of the sides of " the said pyramid are at right angles to the base and to each " other, and the two other sides are so inclined to the base that " each of them makes an angle therewith of forty-five degrees." By this arrangement the arc or angle is read off from the divided limb of the instrument, the spirit level is seen (both by reflection), and the subject of observation is viewed by direct vision.

4th. "The said prismatic reflectors" are applied "not only in " their simple state, but also to the telescope of instruments for " observation, such as quadrants."

5th. None of the surfaces of the said reflectors are made convex " in such instruments as do not require a magnifying power in " the said prismatic or compound reflectors."

[Printed, 6*d*. Drawing. See Repertory of Arts, vol. 22 (*second series*), p. 136; and Rolls Chapel Reports, 8th Report, p. 88.]

A.D. 1812. MARCH 5. Nº 3545.
SCHMACALDER'S SPECIFICATION.

FIG. 4.

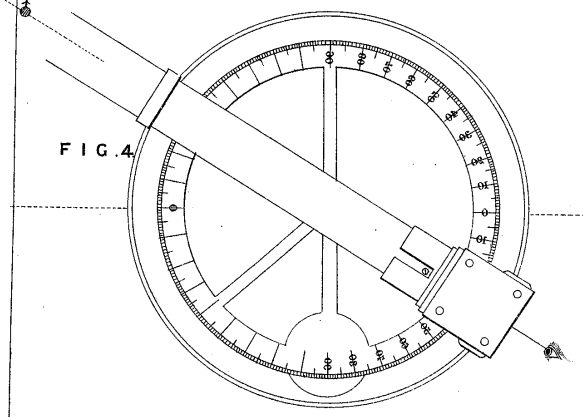

FIG. 1.

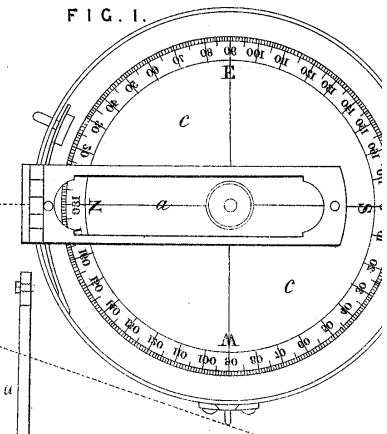

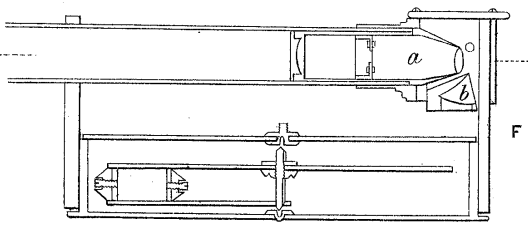

FIG. 5.

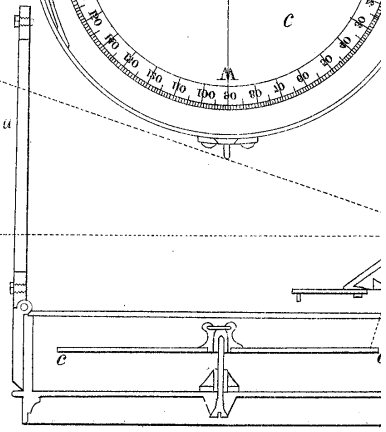

FIG. 3.

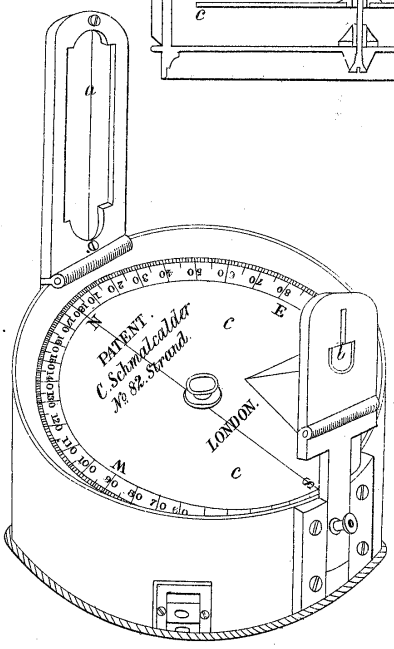

Schmolcke J 6272/1907 Adding aid

6272. Schmölcke, J. March 15.

Calculating - apparatus. —To aid in the adding-up of columns of figures, writing-implements, for example pens or pencils, are provided with a scale and a slide for registering the 'tens.' As shown in Fig. 1, the pen or pencil or its case is provided with a scale *b* and notches *d* corresponding to the graduations. A slide, such as the collar *e*, carries a spring-actuated pawl *f*, one end of which passes through a perforation in the slide and engages with the notches *d*. The collar is prevented from rotating by a projection engaging with a groove *c* in the pencil or its case, while its sliding motion is limited by a stop *g*. A stud *h* on the slide facilitates its operation by the finger.

FIG. 1.

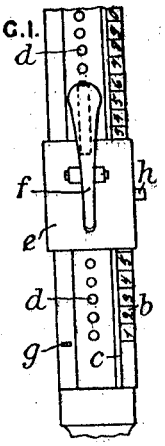

Schneider E 4364/1895 Tab Calc

4364. Thompson, W. P., [*Schneider, E.*]. Feb. 28.

Calculating apparatus. — Relates to apparatus in which certain scales can be brought into juxtaposition and results read immediately therefrom. In the form shown, a roller is placed in a case *b*, which may be formed with a turning back lid. The roller can be turned by knobs at its ends, and in the slot *c* is exposed cubic contents of timber corresponding to the diameters shown on the fixed scale marked along the edge of the slot and the length appearing lowest in the middle cross-slot *d*. For more complex apparatus, two or more rollers may be used, and the paper may be coiled around them so that both sides may be used for tables.

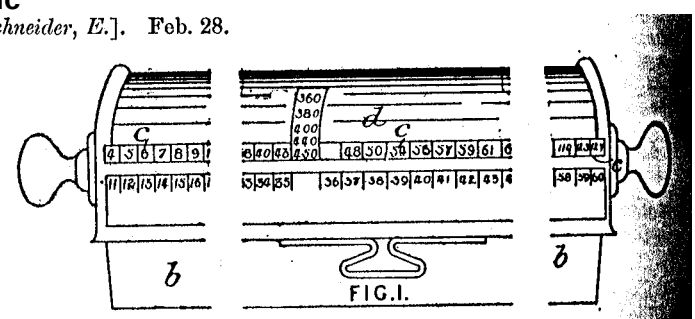

FIG. I.

Schneider A & Perfler J 18604/1901 Adder printer

18,604. Schneider, A., and **Perfler, J.** Sept. 17.

Calculating-apparatus.—Figs. 2 and 13 are views in the opposite direction to Fig. 1. A type-bearing quadrant 203, coupled to an arm 82 which is radial to digit keys 1 to 9 in a fixed arch 65, is set to print, by depressing the required key and turning a quadrant disc 76, to which the arm is latched, and with which it is engaged by a pin and slot. A bell crank 41, connected to the latch 93 by a link 89, lifts it off the stud 94 by encountering the toe 67 of the key, and the quadrant disc jams the link against a pin 69 while it swings the whole angle of the arch. In the return swing, a spring 101, pulling the bell crank, disengages the locking-link and re-engages the latch. The radial arm also drives an adding-wheel, which in turn enables the type quadrant to be set to print the total. The machine is made up of any desired number of such elements, and all the quadrant discs, being connected by a rod 77, turn with a pair of bell cranks 78 (not fully shown), which are connected by coupling-rods 79 to slotted main levers 200, 180, which are co-axial with the printing-quadrants and are operated by cranks 194 on a shaft having a crank handle. The impression is taken on a sheet from a roll 218 in a cradle 208, which bears also a feeding-platen 210 having a ratchet-wheel engaged by a pawl on the casing. An inking-strip between rollers is fed by a pawl on the cradle. The cradle is rocked to take the impression by a swinging frame 229, which moves with hanging levers 226 when the main levers 180 push them before it. To prevent excessive wear of the type, the shaft of the rollers 230 on the swinging frame lies against springs 233. Each radial arm 82 is forked towards the shaft over a spur-wheel 70 of fifty teeth, an attached disc 73 having cam points 75 with notches 74 at each tenth tooth, and a small radial arm 87, Fig. 13, which bears a hinged pawl 103 for the wheels. A pin 104 on the small radial arm projects through a concentric slot 105 in the main arm, and is engaged by the oblique slot 106 of a key 107 on the same, while a pin 109 on the key engages a concentric slot 110 in a cross-lever 111, which normally rests with a pin 113 on a prop 114. The two radial arms thus turn together, and the wheel

85

Another page. If.needed see US 613995

Schooling & Randall 4872/1908 Adder lister

4872. Schooling, W., and **Randall, F. W.** March 3.

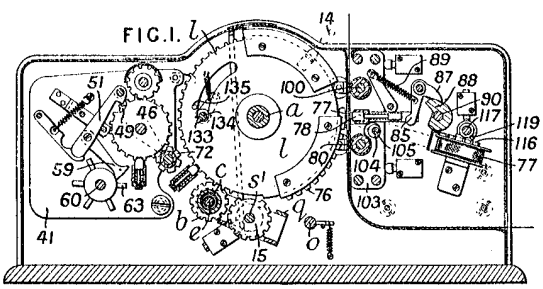

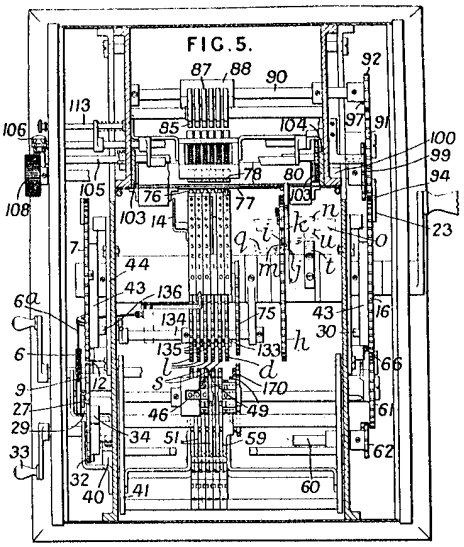

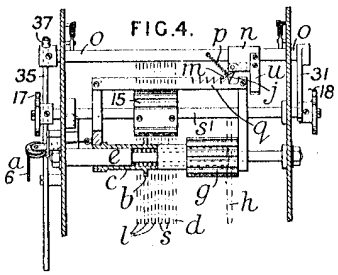

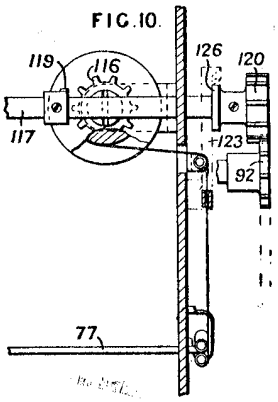

Calculating-apparatus.—In a rack-set, lever-operated, adding and listing machine for recording the amounts of bills or invoices and giving a total of the same, the items are set on loosely mounted racks by means of a single lever or handle which actuates a pinion adapted to be brought successively into mesh with the racks. The totalizer is then rocked into gear with the racks by an operation of the main handle, which in turn effects the printing and the return of the racks to the zero position, the items at the same time being added to the total on the adding-wheels. A side elevation of the machine is shown in Fig. 1 and a plan in Fig. 5. Racks *l*, *s*, *d* are arranged loosely on a spindle *a* and are set consecutively, depending on the item to be added, by means of a pinion *b* carried by a traversing shaft *c* mounted on a spindle *e*. The shaft *c*, Fig. 4, has a long pinion *g* meshing with a toothed wheel *h* to which is attached a setting-lever *k*. The hundreds of pounds rack *l* is set independently by a small lever 14. A pair of dogs *j*, *m* limit the movement of the shaft *c* by engaging teeth on a ratchet bar *q*. The dog *j* is fixed to the sleeve *n* on a rock-shaft *o*, and the dog *m* pivoted to a sleeve is movably held by a spring *p*. When the lever *k* returns to its normal position after setting an item, a plate *t* strikes the plate *u*, rocks the shaft *o*, disengages the dog *j*, and moves the dog *m* into engagement with the next tooth of the ratchet bar *q*, causing the carriage to travel a distance equal to that between the racks; the dog *j* again engages the ratchet bar *q* when the lever is moved to set the next digit of the item. The items are set from left to right, and the setting-pinion can be adjusted in any position by rocking the lever *k*, its pawls being withheld from engagement. The carriage is returned to its initial position by a cord 6^a, which is wound on a pulley 6 rotated at the correct time by a wheel 7, which meshes with a mutilated pinion 9 having a single tooth driving the pulley 6 through a pivoted pawl 27 and a pair of teeth 12 to rotate it far enough to gear with the wheel 7. A bracket 29 disengages the pawl at the correct time. To permit the return of the carriage, a pin 30 on the wheel 16 rocks a lever 31 on the end of the rock-shaft *o* to release the ratchet bar *q*. When returned by hand, the ratchet bar *q* is released by a cam 34 adapted to rock a lever 35 which engages a pin 37 on the rock-shaft *o*, the cam 34 being secured to a mutilated pinion 32 meshing with the pinion 9 and rotated by a handle 33. The racks can be re-set by mutilated pinions 15, Fig. 4, on a spindle s^1 rotated by the wheels 7, 16 through mutilated pinions 17, 18 on the end of the spindle s^1. The totals mechanism mounted on the pivoted plates 41, Fig. 5, is rocked into gear with the racks by levers 44 having rollers moved by cams 43 when the main handle is rotated. Transfer is effected between the totalling-pinions 46 by a single tooth 49 adapted to trip a lever 51, which has a pawl 59 pivoted to it and is moved into its operative position by staggered pins 63 when the carrying-on shaft 60 is rotated by the wheel 16 through mutilated gearing 61, 62, the transfer parts at the same time returning to their initial position. As the pinion 62 has to move with the totalling-mechanism, it does not engage the pinion 61 directly, but

Schooling W & Randall F W 23729/1908 Adder lister

23,729. Schooling, W., and **Randall, F. W.** Nov. 5.

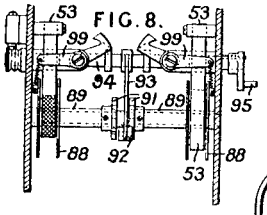

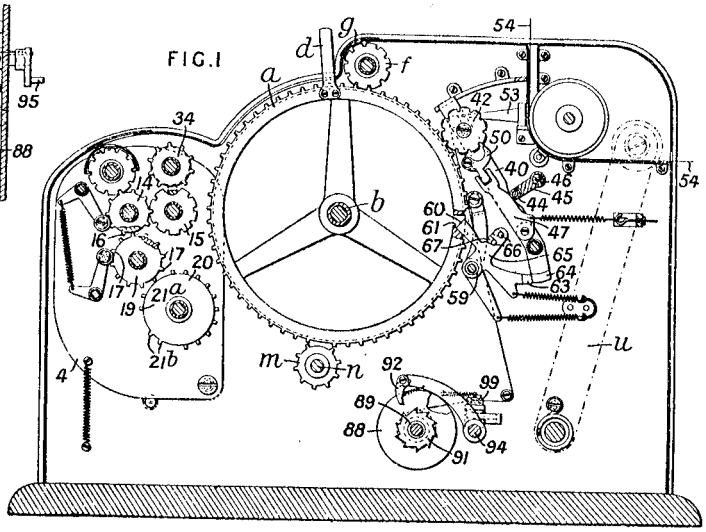

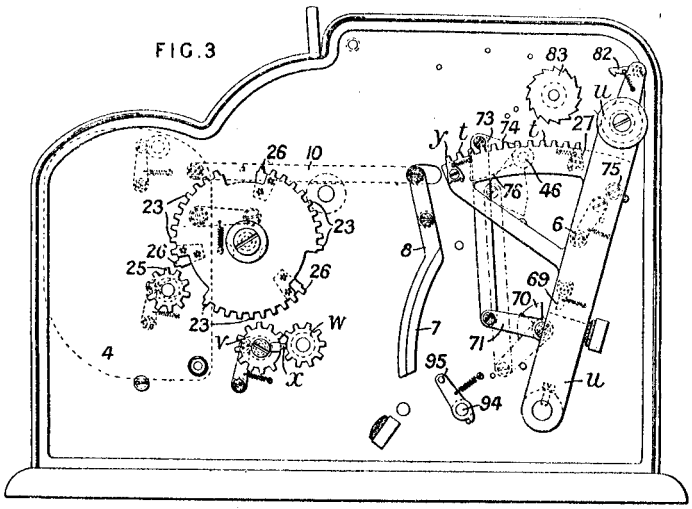

Calculating apparatus.—In a rack-set, lever-operated, adding and listing machine, the items are set on loosely-mounted racks, having separate levers, to a position depending on the item to be set, and the subsequent operation of the main handle effects in turn, on the forward stroke, the printing, the rocking of the totalizer into gear with the racks, the resetting of the racks to zero with consequent registration on the totalizer of the item set, the release of the totalizer; and on the return stroke, the transfer in the totalizer and the feeding of the printing-paper. A side elevation is shown in Fig. 1 and a plan in Fig. 5. The circular racks *a*, independently mounted on a sleeve *b*, are each provided with a lever or handle *d* by means of which the racks may be set. The racks gear with discs *f* for the purpose of indicating the items set through the aperture *g*, or the racks may be provided with strips of vulcanite having the numerals marked thereon. If an error has been made in setting an item, the racks are returned by means of a mutilated pinion *o* on a spindle *n* rotated by a handle *o* through the mutilated gearing *p*, *q*. If the item is correct, the totalizer is rocked into gear with the racks, by means of a roller 6 on the main handle *u*, Fig. 3, which engages a cam-surface 7 on a lever 8 connected by a link 10 to the rocking-frames 4 on which the totalizer is mounted, and the spindle *n* is then rotated by a segment *t* secured to the main handle *u*, which segment engages at the correct time a mutilated pinion *v* and through the pinions v^1, *w* rotates the spindle *n*. The pinion *v* is rotated into the path of the segment *t* by its side tooth *x* which engages the side tooth *y* on the segment.

Transfer-mechanism. Each of the totalling-pinions 14, gearing with the racks through the intermediate pinions 15, has a single transfer tooth 16 adapted to engage one of the pairs of teeth 17 on the mutilated pinion 19 and thereby to bring another pair of teeth into the path of the helically-arranged teeth on the mutilated pinions 20, which are rotated on the return stroke of the handle *u* through the pinion 25 and segments 23 by the segment *t*. The segments *t*, 23 are brought into

© B O B Williams Printed22/11/2023 CalcPatents Ed. 1.doc

Schulze F A 18735/1905 Slide rule for powers & roots.

18,735. Schulze, F. A. Sept. 16.

FIG. 1.

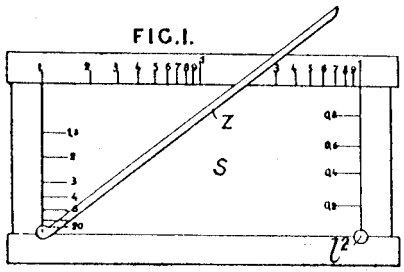

Slide-rules for powers and roots, graduated as shown, are provided wito a pointer Z which can be pivoted in a hole at either end of the main rule. The slide S carries transverse scales indicating the exponent, and the main rule a logarithmic scale, readings being taken against the pointer on both the slide and main rule as well as against the end of the slide on the main rule. The hole l^2 is

Schuster E 9797/1902 Adder

9797. Schuster, E. April 28.

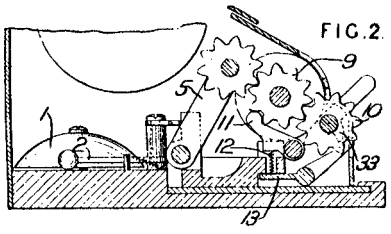

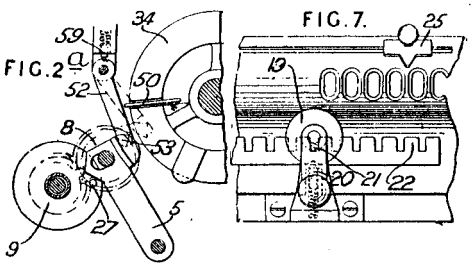

Calculating-apparatus.—Relates to improvements in apparatus such as are described in Specification No. 4724, A.D. 1878, wherein wheels 34, Fig. 2[a], bearing nine protrusile teeth, add or subtract items from counting-wheels 9 by driving them through pinions 8. The slots in the casing through which project the keys for setting the protrusile teeth are divided by lines for ten positions, but the zero and digits are only engraved at the ends of the lines. Ten is carried as follows :—A pin 27 on the units-wheels causes a lever 5 to put an arm 52 into the position shown in dotted lines, where, being held by a catch 59 as in the normal position, a doubly-bevelled lug 53 on it puts momentarily an arm 50 on the tens-wheel into gear with the pinion. A bell 1, Fig. 2, with hammer 2 to be operated by a lever 5, is placed so that it will be

sounded when ten should be carried one wheel further than the machine will do it automatically. Where the counting-wheels 9, Fig. 2, can be turned by fingering exposed wheels 10 in gear with them, the tension of springs 12 acting on pawls 11 can be changed by means of a hinged web 13 under a handled cam 33. Gearing with a crank handle is provided for turning the shaft of the counting-wheels to set them to zero. The sliding part of the machine, provided with a rack 22, Fig. 7, is shifted by turning a disc 19 having a crank-pin 21 in engagement with the rack. A click 20 engaging a notch in the disc rectifies the position. A sliding decimal point 25 is provided. If a second set of counting-wheels is provided for use when summing products made by the first set, arrangements are made for putting it into and out of gear at will.

© B O B Williams Printed22/11/2023 CalcPatents Ed. 1.doc

Schuster E 87/1908 Pin wheel

A.D. 1908.

87. Schuster, E. Jan. 11, 1907, [*date applied for under Section 91 of Patents &c. Act, 1907*].

Calculating - apparatus. — In calculating - apparatus of the pin-wheel and cam-disk type in which two counters in a line are employed, provision is made for zeroizing both simultaneously, or one independently, by means of a connecting-piece 5 engaging the shafts 2, 3 as shown, the cam 9 fitting the recess of the shaft 2. The projections 6, 7 of the piece 5 enter the ends of the shafts, the part 7 being so constructed that the shaft 3 turns when the shaft 2 is rotated, and a spring 8 keeps the piece 5 against the shaft 2. Each shaft is zeroized by means of the longitudinal movement against springs 11, caused by rotation of pins 13 on the shafts against the cam-rings 12. In this way, radial pins on the shafts engage longitudinal pins on the numeral - wheels and rotate them to position. When the shaft 2 rotates, it carries the piece 5 with it by means of the cam 9, thereby causing the shaft 3 to rotate and zeroize the wheels. The shaft 3 may, however, be rotated for zeroizing independently of the other.

FIG. 1.

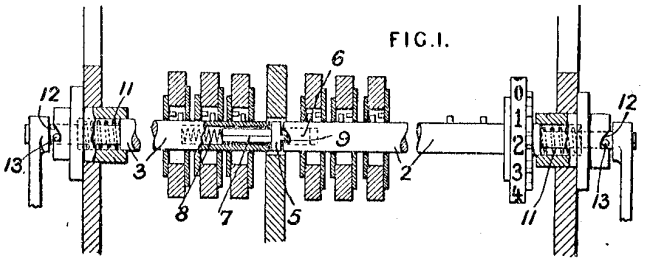

Schuster E 16729/1909 Pin wheel machine

16,729. Schuster, E. July 17.

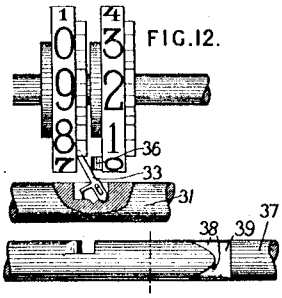

Multiplying-apparatus; varying function of m chine.—Machines of the pin-wheel and cam-d type, such as are described in Specifications 9797/ and 87/08, are provided with two totalizin counters which can be simultaneously operat through a common pinion, or one may be thro out of gear so that registration is effected only up the other ; the two may also be engaged direc by means of a common gear-wheel so that t total registered upon one may be subtracted fr that registered upon the other. Transfer mech ism of the independently-operated type is provid for one of the mechanisms, and an interlock to p vent both of the registers from being simultaneou zeroized is also provided. The operation of t usual pin-wheel 5 Fig. 3, rotates the registerin wheels 7 through the toothed wheel 6, and the registering-wheels 8 through the same wheel and the train 9, 10, 11. The shaft 15 of the wheels 10 is provided with a lever by means of which it can

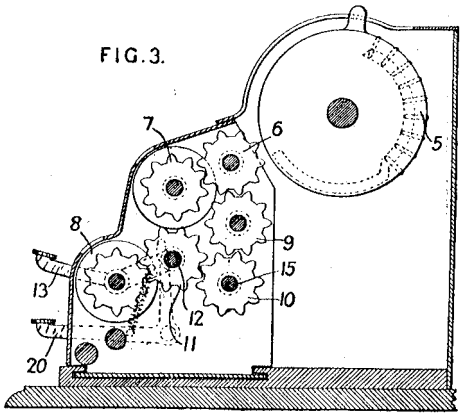

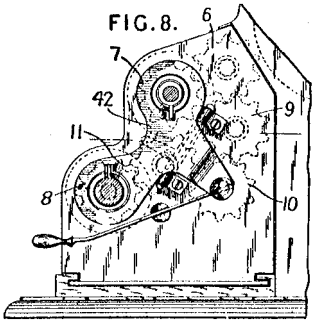

be longitudinally displaced, thus disconecting the wheels 8 from the operating-mechanism. The shaft 12 of the wheels 11 is mounted on a bent lever 13, by the depression of which it can be displaced parallel to itself, so as to connect the two sets of wheels 7, 8 by means of the toothed wheels 11. A spring-controlled lever 20 is provided to support the shaft when so displaced.

In a modification, shown in Fig. 14, the shaft of the wheels 11 is stationary, and subtraction is effected by making use of an additional set of figures placed in reverse order upon the wheels 8 ; an apertured slide 57 is provided to expose the required set. The wheels 8 can be adjusted by means of wheels 61, which project from the casing.

Zeroizing-mechanism.—The shaft 15 is connected through a pivoted spring-controlled plate 42, Fig. 8, with the longitudinally movable shafts of the registering-wheels, so that when one of these shafts is rotated in order to allow the corresponding set of wheels to be zeroized, the plate is rocked and the wheels 10 are automatically thrown out of gear, thus interrupting the connexion between the two sets.

Transfer mechanism.—Transfer in the case of the wheels 8 is effected by spring-controlled slotted pins 33, Figs. 12 and 13, which are rocked into engagement with the higher wheels by pins 36 upon the lower ; the operation of the higher wheels is,

Schuster E 14918/1911 Pinwheel

14,918. Schuster, E. July 7, 1910, [*Convention date*].

Multiplying and dividing apparatus.—The transfer arms 15, of multiplying and like machines such as those of the pin-wheel and cam-disk type, which are adapted, when transfer occurs, to displace laterally addition or subtraction transfer pins on the pin-wheels 1 so that these engage with the next higher counting-wheels, are shaped so as to perform a similar function in the case of machines provided with two or more separately-operated counting-mechanisms. The arms 15 having, as usual, projections 21 with curved cam surfaces 20 at one end co-operating with transfer-teeth 19 on the numeral-wheels of one counting-mechanism 4, are provided at the other end with similar projections and cam-surfaces 23, 22, and with a slot 17, similar to the slot 16, embracing the shaft 14. Transfer-teeth 29 on the numeral-wheels of the second counting-mechanism 9 co-operate with levers 30 to set the transfer parts 22, 23 into operative position. Either end of each arm 15 is maintained in operative position by spring-controlled bolts 25, 26 adapted to engage the shafts 14, 6, respectively.

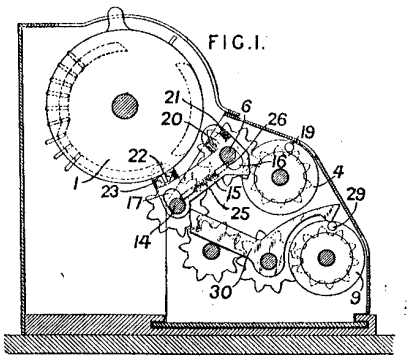

Schwarz G & R 22566/1899 Adding typewriter

22,566. Schwarz, G., and **Schwarz, R.** Nov. 11.

Calculating-apparatus; counting-apparatus.—Relates to an apparatus for typewriting columns of figures and obtaining their total, or the difference of two numbers, and for indicating at a distance the total or difference; for subtraction, the counting-discs are replaced by others reversely marked. The type-writer can be clamped on a hook by means of screws. The carriage *c* can be slid longitudinally for line-spacing on the guides *a*, a spring click c^1 taking into holes a^4. The spacing between individual digits in the same line is effected by turning the arm c^{10} against the tension of the spring c^{11}, bevelled stops c^{13} rising behind it and preventing its return; or the spacing may take place in the other direction, under the pull of the spring, on pressing keys c^{14} carrying the stops c^{13}. The end of the arm c^{10} carries a sector c^8 gearing with a pinion c^6 engaging a rack c^7 on the transversely-moving carriage c^3. The type-carrying rods d^5 are mounted in a revoluble carriage *d*, d^2, fitted with rollers d^6 running on a rail c^5 so that any rod can be brought over a recess in the rail and pressed down to print; rollers d^7 supply ink to the type before it reaches the recess. On the type-rods are projections d^8 of different lengths which give to a lever f^1 a movement proportionate to the number marked on the key, and so through the sector and pinion f^2, f^3 and slip pawl and ratchet f^4, *g* rotate a star-wheel f^5 a corresponding number of teeth, and in the return stroke, under the action of a spring, drive the gear of a controlling-fly. During the forward stroke, the teeth of the star-wheel f^5 wipe over the upper insulated surface of a contact-spring *h*, but on the return stroke they strike the under conducting-surface of the spring and complete circuit, for the distant totalizer, a number of times equal to the number marked on the key depressed. The counting-apparatus is situated at a distance, and consists of a series of independent numbering-wheels, each provided with a weight motor and controlled by an escapement lever forming the armature lever of an electromagnet. The electromagnets are situated in shunt circuits connected successively to the main line-wire by the position of the transversely-moving carriage. Thus, when the carriage is in position to print the "hundreds" figure of an item and the wheel f^5 is rotating, it closes the circuit of the "hundreds" numbering-wheel magnet as many times as the figure on the depressed key indicates. Should a numbering-wheel pass from 9 to 0 in the course of its movement, a projecting arm upon it closes circuit once for the numbering-wheel of next higher denomination, and "carries one" to this wheel.

FIG.1.

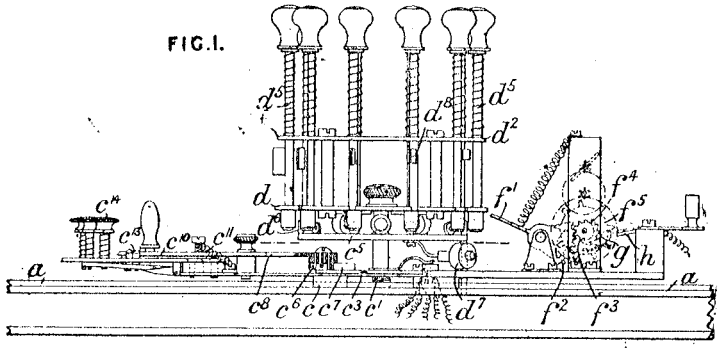

FIG.2.

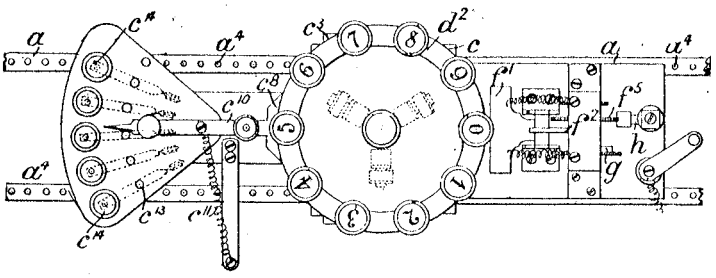

Scott J C 1038/1878 Machine to produce scales

1038. Scott, J. C. March 15.

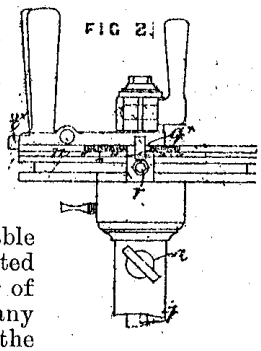

Rules.—Relates to apparatus to be used in conjunction with machines for punching, drilling, setting out work, or engraving graduations on rules. The shaft *b* through which the work table (or tool carrier) of a machine is to be actuated is arranged to turn in a suitable fixed bearing *a* and is operated by a handle. The number of whole revolutions plus any fraction of a revolution the shaft *b* requires to give the desired intermittent traverse to the work table (or tool carrier) having been determined, the handle is made loose on the shaft *b*, and turned until its spring trigger *t*× enters a zero notch in the face of a dividing-wheel *n*; a hinged stop *q*× adjustable in a circular slot in the periphery of the dividing-wheel is then adjusted to correspond with the fraction of a revolution and the handle is tightened on the shaft *b*. The spring trigger *t*× is then released from the zero notch by pressing its lever end inwards, and the handle is turned the desired number of complete revolutions, after which the hinged stop *q*× is turned down to operate and the handle is brought to rest at the required position. The invention is described as applied to engraving graduations on rules. The shaft *b* is formed with a screw for traversing the tool carrier.

Abridged also in Classes *Hand tools &c.*; *Metals, Cutting &c.*; *Printing, Letterpress &c.*

Scott & Britannia Works 17642/1892 Photo exposure

A.D. 1892.

17,642. Scott, J. A., and **Britannia Works Co.** Oct. 4. *Amended.*

Slide-rules.—Photographic exposures are determined by an instrument on the principle of the slide-rule, the particulars of the determining elements being given on concentric rings *b*, *c*, *d*, *e* on a plate *a*.

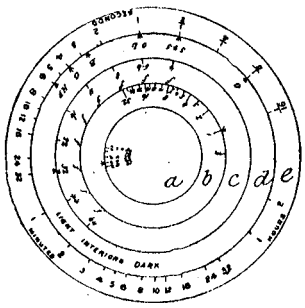

Scurfield G G 24553/1894 Circ slide rule

24,553. Scurfield, G. G. Dec. 18.

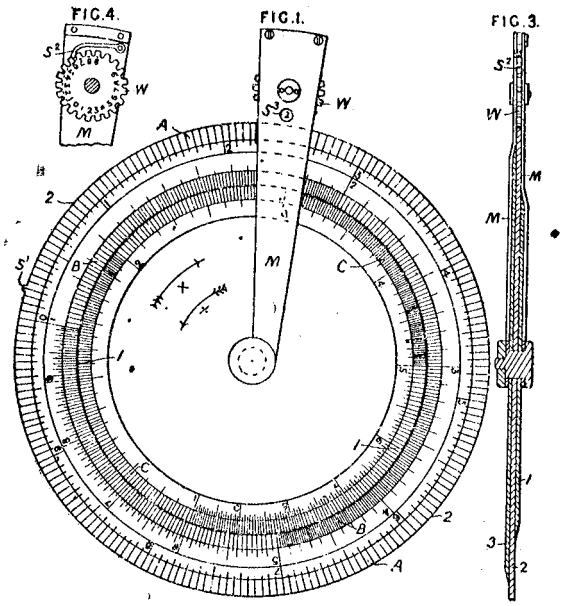

Slide rules.—The apparatus consists of a series of concentric discs 1, 2, 3 (three in the form shown) on the common pivot of which is hinged a bifurcated arm M, one edge of which forms a radial marker for reading the scales. In the end of the marker is journalled a wheel W, controlled by a spring S^2 and graduated 0 to 9 and 1 to 9 for exhibiting characteristics through an aperture F. The front of the rule on the disc 2 is marked with a uniform scale A for reading mantissæ, and a logarithmic scale B for numbers; on the disc 1 is also a logarithmic scale C. In performing the operation of multiplication or division, the wheel W is adjusted at first according to the characteristics of the logarithms of the numbers involved. Then, in the process of adding the logarithms by moving the marker to the right, or subtracting by moving to the left whenever the marker passes zero, the tooth S^1 engages the wheel W and makes the necessary alteration in the characteristic. The back of the rule is graduated for sines and tangents in a special manner and when the marker, which is also specially marked at the back to facilitate reading, has been set at any desired point, results are read on the face of the rule from the scale B.

Seaton– Snowdon F 21963/1902 Solve triangles

21,963. Snowdon, F. Seaton-. Oct. 9.

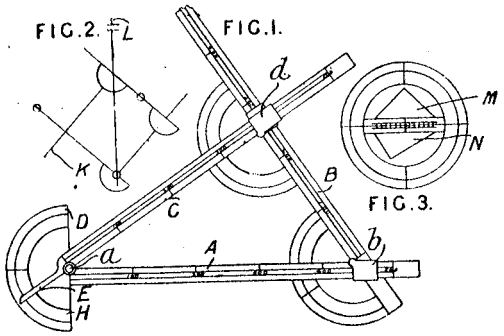

Calculating-apparatus.—Fig. 1 is a plan of an instrument for the mechanical solution of triangles. Two graduated arms A, C are hinged together at *a*; the end of the arm A is fitted with a protractor H, D, and the end of the arm C is fitted with a pointer E, by means of which the angle between the arms A, C can be read off. A third arm B is fitted with two double-socket pieces *b*, *d*, through which the arms A, C are free to slide and be adjusted. Each of these socket pieces is fitted with a protractor by means of which the included

41 0

Seger B 19515/1902 Adder on discs

19,515. Seger, B. Sept. 5.

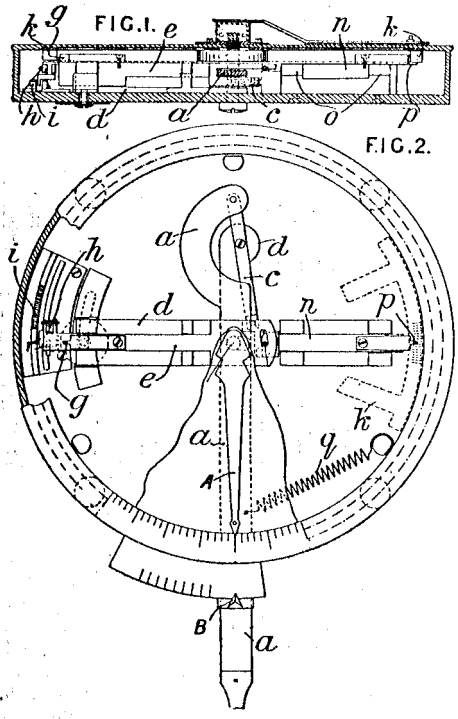

Calculating-apparatus.—Relates to adding-machines in which the movement and the immediate retaining or locking of the apparatus in a certain position are automatically performed with certainty by means of a single movement of a lever or key. When it is desired to add to a certain number another number comprising several figures, an indicator A, which is arranged upon the rotatable disc *k*, is adjusted to this number, and the lever *a* with its pointer B is moved from zero to the location of the number it is desired to add. The movement of the lever *a* causes the lever *c* to displace the coupled slides *e*, *n*. The locking-tooth *p* is thus disengaged from, and the tooth *g* is

229

moved into engagement with, the teeth on the underside of the rotatable disc *k*, which then turns with the angular piece *d*, and the pawl *h* is advanced a number of teeth on the ratchet *i* corresponding to the angular movement of the lever *a*. Upon the commencement of the return movement of this lever, the pull of the spring *q* moves the slides *e*, *n*, thereby disengaging the tooth *g* from, and re-engaging the tooth *p* with, the teeth on the underside of the disc *k*. The disengagement of the pawl *h* from the teeth of the ratchet *i* is simultaneously effected, and, as the slide *n* moves between fixed guides *o*, the disc *k* is locked in position. If keys be substituted for a hand-lever, the angular motion of the lever *a* is effected by a plate or similar motion-transmitting device, which is given a corresponding movement by means of wedges connected to the keys.

Seidel & Naumann 15972/1911 Thomas type

15,972. Behr, B., and **Akt.-Ges. vorm. Seidel & Naumann.** July 10.

Multiplying and dividing apparatus. — The figure-rules of Thomas calculating-machines, instead of being pivoted as usual to shafts adapted to slide in their bearings, are pivotally attached to slides *b*, Fig. 1, guided in dovetail grooves *c*. Accidental withdrawal of the figure-rule and slide is prevented by the co-operation of a spring-buffer *m* and stop *l*; the latter can, however, be detached, allowing the figure-rule and slide to be bodily removed.

FIG. 1.

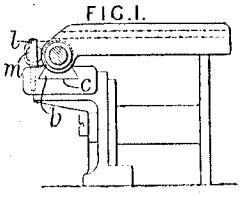

Seidel & Naumann 18737/1911 Stylus adder

18,737. Behr, B., and **Akt.-Ges. vorm. Seidel & Naumann.** Aug. 19.

Adding-apparatus. — In a stylus set and operated calculating-machine, a reciprocating-chain drive is provided having spring-operated pawls or a pivoted rack adapted to actuate the numeral wheels. The chain passes over two guiding-rollers *c*, and comprises links *m* which have the digits marked thereon, links *i* having pivoted pawls *r* to actuate the numeral wheels *b*, and links *d* with a spring *o* and a bar *p* to connect the ends of the other links. As shown in Fig. 4, the pawls *r* actuate the numeral wheels *b* in one direction only. In a modification, the links *i* are replaced by a spring-operated rack, which is mounted on parallel arms normally in an inclined position.

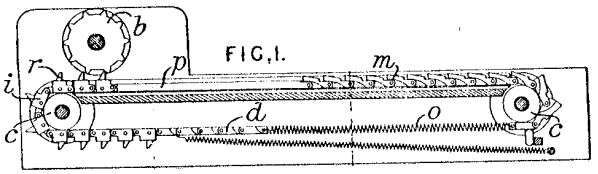

FIG. 1.

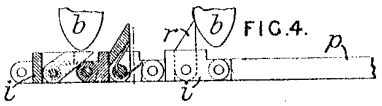

FIG. 4.

Seidel & Naumann 28850/1912 Alarm for Thomas machine

28,850. Akt.-Ges. vorm. Seidel und Naumann. Dec. 22, 1911, [*Convention date*].

FIG.3.

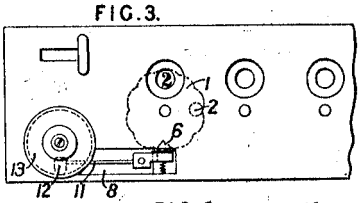

FIG.8.

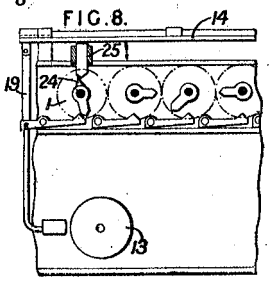

Multiplying and dividing apparatus.—Three arrangements are described of means for giving an alarm whenever the capacity of a Thomas machine is exceeded, no matter what may be the position of the figure-rule at the moment. In the machine shown in Fig. 3, in which transfer mechanism connects all the numeral-disks when the figure-rule is in its normal position, the alarm-apparatus is carried entirely by the figure-rule. As soon as the highest numeral-disk 1 completes a revolution, a pin 2 thereon engages the cam-shaped projection 6 of a spring-controlled lever 11 mounted in a groove 8 and carrying a hammer 12, and actuates the gong 13. In a second form, adapted for machines in which the transfer mechanism does not extend to all the numeral-disks situated at the left-hand of the rule when in normal position, the gong 13 is supplemented by a second stationary gong placed in proximity to the extreme left-hand transfer mechanism. In

© B O B Williams Printed22/11/2023 CalcPatents Ed. 1.doc

Seignon A 278/1883 Tab calc multiply

278. Boult, A. J., [*Seignon, A.*]. Jan. 17.

[*Provisional protection not allowed.*]

Calculating-apparatus consists of a number (not less than 9) of branches which at the top bear a numeral. Each branch is divided into 8 squares, each containing one of the first 8 multiples of the figure at the top. The units and tens of the multiples are divided by a diagonal line, and the branches may be arranged together in the form of a fan.

Sellers J 323/1870 Tabular calculator cylinder.

323. Sellers, J. Feb. 4. [*Provisional protection only.*]

Calculating-apparatus for reckoning the wages of workmen &c. A revolving cylinder is enclosed in a case having a longitudinal slit through which a portion of the cylinder is visible. "The numbers " for multiplicand or amount to be calculated from " are marked on the side or sides of the slit," and the multipliers are marked round the end of the cylinder. Upon the periphery of the cylinder the quotients are marked in longitudinal lines, so that, by turning the cylinder to bring the required number opposite the slit and looking at the number or amount marked on the case, the quotient will be found opposite to it on the cylinder.

Sellers & Hopkinson 2816/1871 Tabular calculator

2816. Sellers, J., and **Hopkinson, E.** Oct. 21. [*Letters Patent void for want of Final Specification.*]

Calculating-apparatus. — A cylinder having the multiplicand, or amounts to be calculated from, marked on one end, and the quotients along its length, is enclosed in a case provided with a longitudinal slit through which a portion of the cylinder is visible. The multipliers are marked on the side of the slit, so that by turning the cylinder so as to bring the required multiplicand opposite the slit, the quotient will be found on the cylinder opposite the number or amount of the multiplier marked on the side of the slit. The cylinder is divided according as it is required for weights, measures, wages, &c.

Selling E 8912/1886 Pantograph multiplier

8912. Selling, E. July 8.

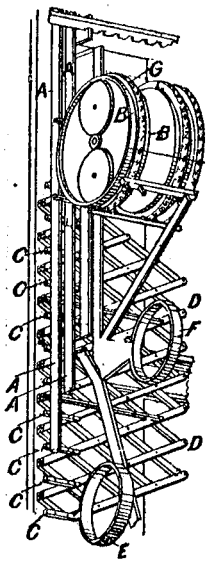

Calculating-apparatus for addition, multiplication, &c. The action of the machine will best be understood by explaining it with regard to multiplication. A series of racks A, A (say 12 in number) gear normally with 12 of a corresponding series of (say 15) toothed wheels B, B and may be fixed as required to cross-bars C, C connecting corresponding points of two equal pantographs D, D (one only being shown in the Figure). When the pantographs are moved, the relative play of the racks, and consequently the motion of the wheels B, B, will depend upon the bars to which they are temporarily attached, being greater the further such bars are from the fixed pivots of the pantographs. The bars are numbered, and a pointer attached to one of the pantographs moves over a graduated scale. Some of the working parts are capable of a rocking motion, to throw the racks out of gear with the wheels when required, and also of a transverse sliding motion to bring them into gear with new wheels; the handles E, F are provided for these purposes. The numbering-wheels G are placed alternately between the toothed wheels B, B, and are geared in such a way as to receive $\frac{9}{10}$ of the motion of the toothed wheel adjacent and $\frac{1}{10}$ of the preceding numbering-wheel; by this means the carrying of the tens is allowed for. The action is as follows:— The racks are attached in order to the bars numbered with the digits of the multiplicand, and, being in gear with the toothed wheels, the pointer of the pantograph is moved on the scale as far as the first number of the multiplier; the partial products are thus obtained on the numbering-wheels by the different play of the racks, and the carrying of the tens effected simultaneously by the peculiar intergearing. The racks are then thrown out of gear, slid to the right the space of one rack, and the operation repeated for the next figure of the multiplier. Various contrivances of a similar nature are employed for obtaining the sum of the multipliers &c. simultaneously, and a printing-cylinder is also provided for taking impressions of results from the numbering-wheels; there are also appliances for rapidly returning the wheels to zero and for setting the machine &c. For the sake of convenience the fixed pivots are in the middle of the pantographs, and the bars are numbered not 0 to 9,

13

but −5 to +5, the multiplicands being expressed in terms of these digits; thus 27 would be written 3Ɛ, the inverted figure signifying a negative quantity.

Selling E 23737/1903 Pantograph multiplier

23,737. Selling, E. Nov. 2.

FIG. 2.

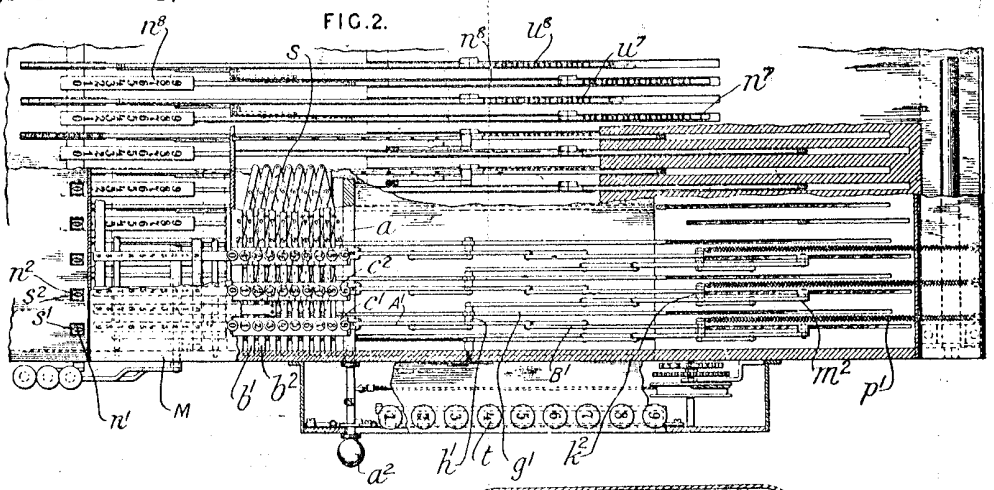

FIG. 3.

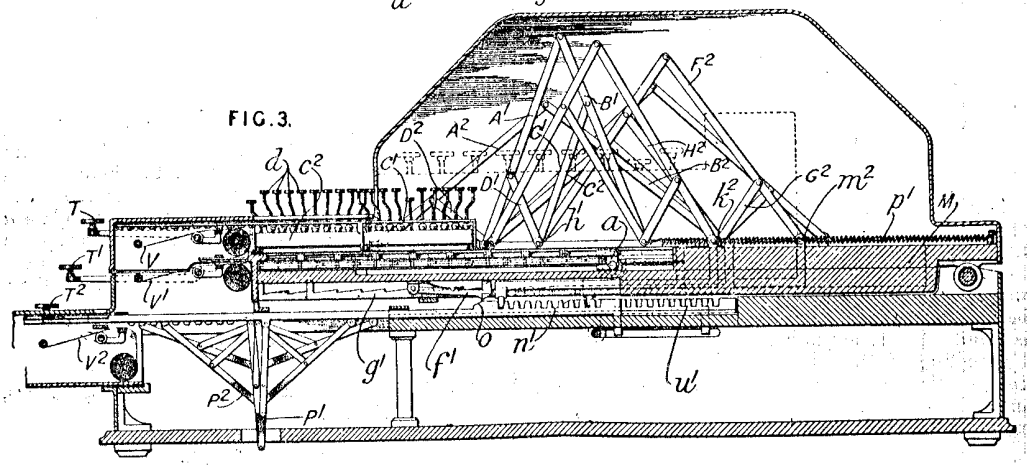

Calculating-apparatus for multiplication &c Machines in which the partial products are formed by lazy-tongs, as in the machine described in Specification No. 8912, A.D. 1886, or for addition or subtraction only, or in which units and tens of the partial products are introduced separately, are provided with mechanism for the carriage of tens, the main parts of which effect only rectilinear movements. Longitudinally-movable figure bars are used for the indicating-mechanism, and all the figures introduced and obtained are recorded or printed. The tens mechanism is so designed that as soon as one of the figure bars passes beyond the single digit limit, *i.e.*, 9 or 0, one-tenth of the excess is first transferred to the next figure bar on the left, whereupon it is moved to such an extent that the said excess is supplemented so as to obtain the next integer, the figure which has passed the 9 or the 0 being simultaneously moved to the tenfold extent of the supplement in the direction opposite to that of its previous movement. This movement of the figure bars is effected by a pair of pantographs in each place. In the machine shown in Figs. 2 and 3 the partial products are formed by means of the lazy-tongs S. The movement of the driving parts or casings c^1, c^2, &c., which is in proportion to a partial product, is transmitted to the figure bars n^1 &c., or u^1 &c., of each place by a pair of pantographs, the first of which with three rectilinearly-guided hinge-pins is connected to the second. The second pantograph, *e.g.*, F^2, G^2, H^2, of each place of figures is connected to the first pantograph of the same place A^2, B^2, C^2, D^2 and to the first pantograph of the next right-hand place A^1, B^1, C^1, D^1 in such manner that the movement to be transmitted from the pin m^2 to the figure bar n^2 is partly produced by the twofold movements of the pin h^1 connecting

Semle A 24750/1906 Tab calc

24,750. Semle, A. Nov. 7, 1905, [*date applied for under Patents Act, 1901*]. *Void.* [*Published under Patents Act, 1901.*]

Calculating-apparatus of the ready-reckoner type, in which the results for each factor are tabulated on separate cards, each provided with an aperture through which the product or other function of the corresponding factors is read when two cards are superposed. In order to economize space, the results for four factors may be tabulated on each card, as shown in Fig. 3. In this example, the tables being for multiplication, the products of the factors 27 and 74 are tabulated on the front of the card, the latter set being inverted, and the products of the factors 28 and 73 are arranged similarly on the back of the card. The aperture *s*, which may be fitted with a transparent material, exposes the required result on any supplementary card, and may have a coloured border so as easily to locate the result. In this contracted form, the products of factors appearing on any one card are read as in ordinary tables. The tongues *r* indicate the factors for which the card is drawn up. It is stated that the device is applicable for tables of multiplication and division, and for finding roots, areas of circles, interest, &c.

FIG. 3.

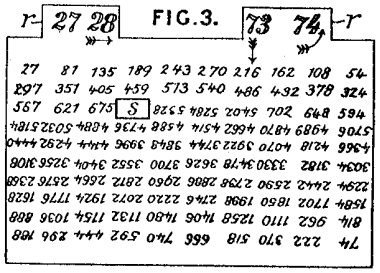

© B O B Williams Printed22/11/2023 CalcPatents Ed. 1.doc

Shakespeare J 12615/1894 Adder cash register

12,615. Shakespeare, J.

Receipts, checking and recording; calculating apparatus.—Relates to improvements in apparatus of the class described in Specifications No. 20,581, A.D. 1890, and No. 3882, A.D 1892, combined with the compound receipt strips described in the latter, a calendar, and index columns for recording

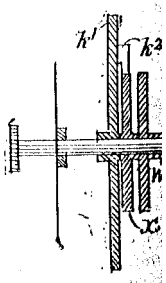

at
77.

nber of receipts issued. Fig. 1 shows an pparatus, the wheels A, B, C being carried dles with actuating knobs at the end and dex fingers moving over dials. A is for

FIG.1.

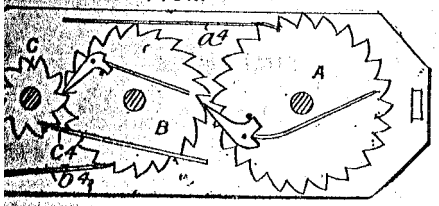

nce, B for shillings, and C for pounds, and vements are controlled by check pawls , carrying being effected by the spring pawls A modified form of this adding apparatus is ed. By employing idle wheels to carry the rring pawls, between the indicating wheels, reasing the number of the latter, the index may be made to move in one direction and ms may be dealt with. When it is required ract, the device shown in Fig. 7 is employed, echanisms being of course repeated for , shillings, and pence. The index finger V on the spindle b^1 carrying the disc k^1 with driving a ratchet x in one direction only. d on a sleeve w^3 to which is attached the nger W. If W be turned to indicate the d on one dial, and V be then turned in the e direction to indicate the subtrahend on concentric dial, carrying W with it, the will show the remainder. The apparatus adapted for multiplying and dividing. pplied to a check till each dial and mechan- uplicated, one set being worked when the ng fingers are operated and the other when re returned to zero. The former set is to a public register and to a secret record- aratus, which is provided with removable s fitted on only when an authorized person to read the record. The till lid operates ling pawls, so that the indicator can only be en the lid is open and returned to zero t is closed. A weighted catch is provided till lid for each dial of the indicator. These are released only when the indicators are in which position projecting fingers on the heels strike the catches and tilt them free of taining hooks. An alarm bell is sounded ver the till lid is operated.

Sharp A 18299/1892 Apptus for Fourier expansion

18,299. Sharp, A. Oct. 13.

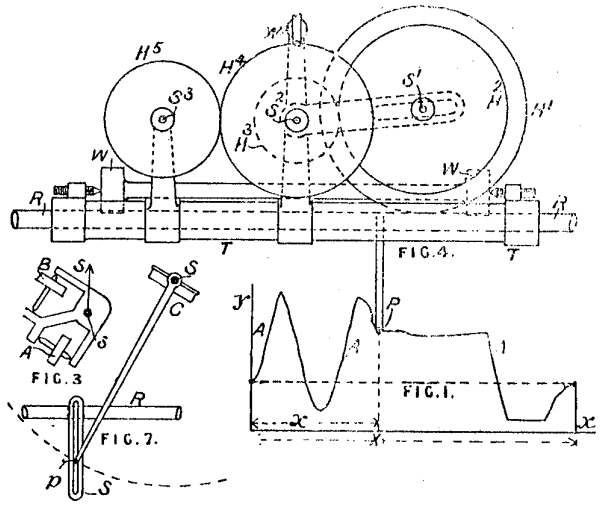

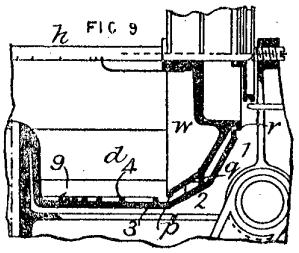

Calculating-apparatus.—The apparatus is for obtaining the coefficients of the Fourier expansion—

$$f(x) = a_0 + a_1 \sin x + a_2 \sin 2x + \ldots + b_1 \cos x + b_2 \cos 2x + \ldots .$$

where $y = f(x)$ is the equation of a periodic curve A A A, Fig. 1, and where $a_0 = \frac{1}{2\pi}\int_0^{2\pi} y\,dx$ and

$$a_n = \frac{1}{\pi}\int_0^{2\pi} y \sin n x\,dx = \frac{1}{n\pi}\int \cos n x\,dy$$

$$b_n = \frac{1}{\pi}\int_0^{2\pi} y \cos n x\,dx = \frac{1}{n\pi}\int \sin n x\,dy$$

the right-hand integrals being taken between corresponding limits to the left. For this purpose a carriage T, Fig. 4, is mounted on wheels W, W, *w* and runs parallel to the axis of *y* while a rack R slides parallel to the axis of *x*. In the apparatus shown in Fig. 4 three pairs of coefficients can be determined simultaneously. For a_1, a_2, a_3 the gear $H^1 \ldots H^5$ drives the spindles S^1, S^2, S^3 at velocity ratios 1 : 2 : 3, H^1 having the circumference of its pitch circle equal to the abscissa X of one complete period of the curve. Other suitable gear must be employed for other pairs of coefficients. On each spindle S^1, S^2, S^3 is mounted the arrangement shown in Fig. 3 with two wheels A, B having axes at right-angles and the planes of the wheels preferably passing through the axis *s*. Now if B make an angle *x* with the arrow S, and be moved in that direction a distance *dy*, the rotation of B will be *dy sin x* and that of A will be *dy cos x*. Hence, by setting the planes of all the wheels B parallel to the axis of *x* to begin with, and then moving the pointer P which is attached to the rack R over the curve A A A, the wheels A and B on the spindle S^1 will (since the circumference of the pitch circle of $H^1 = X$) respectively register $\int \cos x\,dy$ and $\int \sin x\,dy$, while the other corresponding wheels on S^2, S^3 will give $\int \cos 2x\,dy$, $\int \sin 2x\,dy$, and $\int \cos 3x\,dy$, $\int \sin 3x\,dy$. To determine $\int y\,dx$ so as to obtain a_0, the wheel C, Fig. 7, mounted similarly to B is used, the axis S being controlled by a lever, one end *p* of which works in a slotted arm projecting from the rack R. Where the abscissa of the period is not equal to the circumference of the pitch circle, a pantograph is employed with

Sharp A 16350/1893 Harmonic analyser

16,350. Sharp, A. Aug. 30.

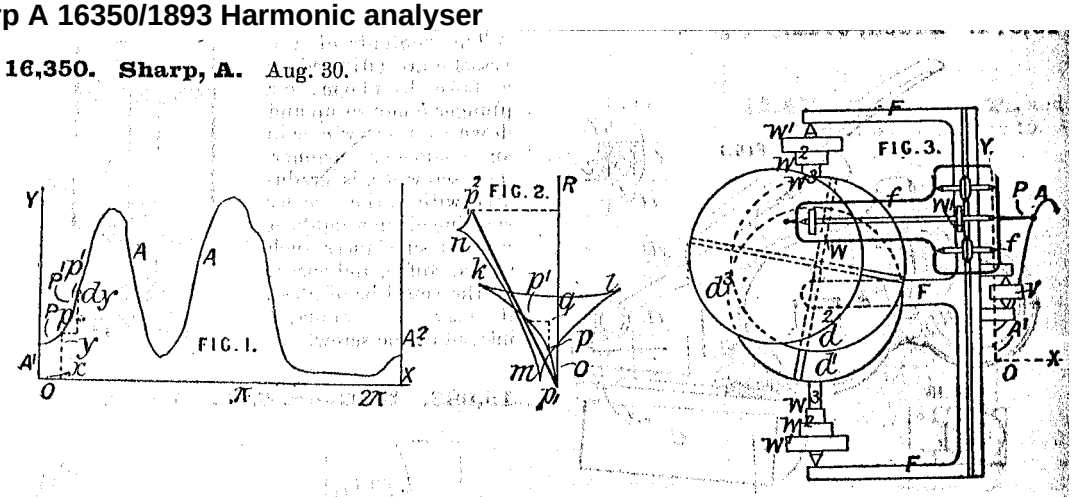

Calculating-apparatus.—Relates to a harmonic analyser. In Fourier's expansion—

$$y = a_0 + a_1 \sin x + a_2 \sin 2x + \ldots + b_1 \cos x + b_2 \cos 2x + \ldots$$

$$a_n = \frac{1}{\pi}\int_0^{2\pi} y \sin n x \, dx = \frac{1}{n\pi}\int \cos n x \, dy$$

$$b_n = \frac{1}{\pi}\int_0^{2\pi} y \cos n x \, dx = -\frac{1}{n\pi}\int \sin n x \, dy$$

} between corresponding limits.

If now we make $a_n = c_n \cos \alpha_n$ and $-b_n = c_n \sin \alpha_n$ for all values of n we have $c_n^2 = a_n^2 + b_n^2$ and $\tan \alpha_n = -\frac{b_n}{a_n}$ and the expansion becomes :—$y = a_0 + c_1 \sin (x - \alpha_1) + c_2 \sin (2x - \alpha_2) + \ldots$

The object of the present invention is to obtain the constants $c_1, c_2 \ldots$ and $\alpha_1, \alpha_2 \ldots$, and Fig. 1 shows a diagrammatic view of an apparatus for this purpose, the detail mechanisms being mostly omitted or shown in an elementary form. The tracer P is made to run over the periodic curve $A_1 A A' A_2$ ($A_1 A_2 = 2\pi$) and, if the integrating wheel W is so connected with it that its axis rotates in a horizontal plane proportionately to the movements parallel to O X while it turns on its axis proportionately to the movements parallel to O Y, the following results will follow :—If p, p', Fig. 2, be positions of the wheel corresponding to P, P' of the curve, $p p' = dy$, $p'q = \sin x \, dy$, $pq = \cos x \, dy$. Supposing the axis of W to make n revolutions while the tracer is completing the curve, the wheel will describe some curve $p_1 k l m n p_2$ and O R being the tangent at the starting point it can be shown that $p_1 p_2 = n\pi c_n$ and $p_2 p_1 R = \alpha_n$. In the apparatus shown, a carriage F runs parallel to O X on the wheel v, and on one pair of the wheels $w_1, w_2, w_3 \ldots$, rails being provided for the smaller pairs when used. The tracer P is fixed to a carriage f running on the carriage F parallel to O Y, and in f also is journalled the integrating wheel. Instead of making the axis of the integrating wheel rotate, the surface d^3 on which it presses turns about the point of contact with the wheel. This movement is effected as follows :—d_1 is a disc driven from the shaft carrying the pairs of wheels $w_1, w_2, w_3, \ldots$ so that it makes one, two, three . . . revolutions while the tracer describes the curve according to which pair of wheels is acting. With d_1 rotates the disc d_2 which, however, can slide on the former in one direction determined by a key and keyway. A similar connection is made, at right-angles to the first, between d^3 and d^3 so that the latter will rotate with d_1, but will be free to turn always about the point of contact of the wheel W. To ensure W always rotating, a wheel W' is fixed on the same spindle and runs on the carriage F. In practice there are several detailed mechanisms for reducing friction &c., and a form is described in which more than one pair of constants may be obtained simultaneously.

Sharp H S 108005 of 1916 Screw design

108,005. Sharp, H. S. July 14, 1916.

Computing-scales.—Apparatus for calculating the size of hole to be drilled, prior to tapping to receive a screw of a given diameter and pitch, comprises a stock A recessed at A^1 to receive an engineer's steel scale C, clamping means for which may be provided. Adapted to slide in an inclined grooved guide-piece *a* secured to the stock is a part B similarly inclined and provided with a scale arranged so that, when the zero mark is opposite the left hand side of a sight opening *d*, the top of

31

the scale is level with the top of the guide. The graduations on the scale correspond with the threads per inch and are so situated that their height above the zero point is equal to twice the depth of the screw-thread. In operation, the

FIG. II.

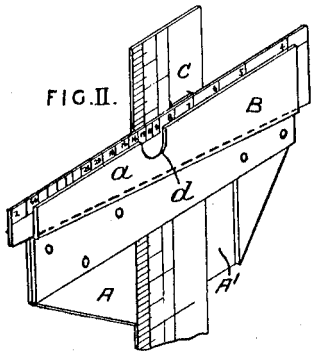

scale C is placed with the graduation representing the diameter of the screw level with the top of the guide-piece *a*. The part B is then pushed in until the required graduation is opposite the left hand side of the sight opening, whereupon the diameter of the hole to be drilled is read off on the scale.

Sharpe J 8762/1890 Adder

8762. Boult, A. J., [*Sharpe, J.*]. June 6.

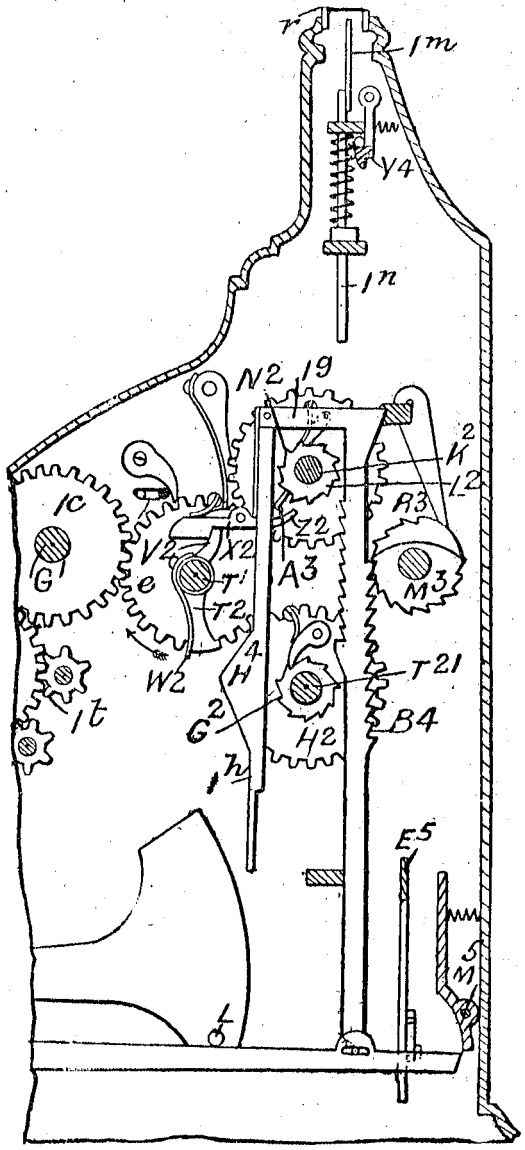

Calculating-apparatus.—Relates to an arithmometer. For adding units a bank of digit keys under a restoring weight yoke L turns a ten-toothed ratchet sleeve L^2 on a shaft K^2, and the rotation is transmitted to a numbering wheel or sleeve upon a parallel shaft G^1 through spur gear N^2, *e*, 1^c. For carrying tens, when the ratchet bar turns the sleeve past a complete rotation, a pin A^3

7 G

Shattuck W P 7172/1900 Keyboard adder printer

7172. Day, C. A., [*Shattuck, W. P.*]. April 18.

FIG. 1.

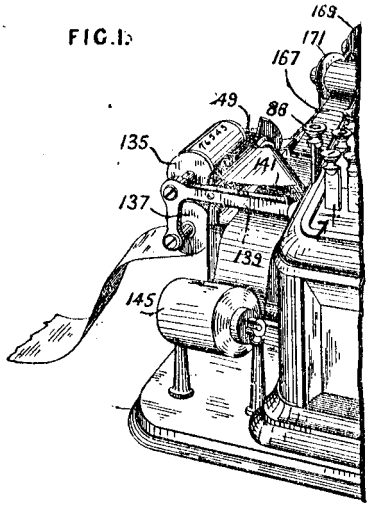

FIG. 21.

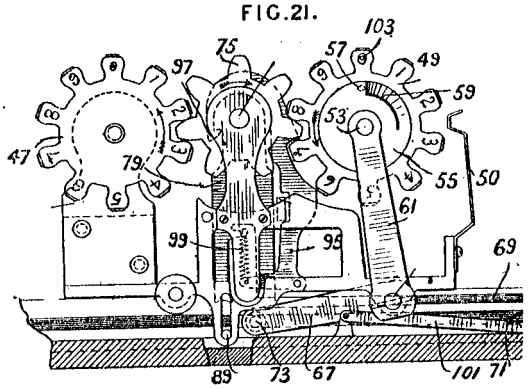

Calculating-apparatus; counting-apparatus.—Relates to keyboard apparatus for printing columns of 335

figures, such as the values of cheques, and their total. Corresponding to each row of keys 7, Fig. 3, is a screw shaft 23 mounted in a carriage 15, which, when any number has to be registered, is drawn forward to the front of the machine and pushed back again by means of the handle 19. The depressed key in each row engages the thread of the corresponding screw shaft 23, and rotates it through an angle proportionate to the number marked on the key button. Normally, the screw shafts are locked by a pivoted spring plate 31, which engages a pin 35, but is thrust aside by the depressed key just before the screw shaft reaches it. The keys are returned, on the back movement of the carriage, by the action of a slip pawl 14 on a bevelled lug 12, depending from a plate 6 which is raised by pins and slots 8 and forces up the projections 9 on the sides of the keys. When it is desired successively to repeat the same number, the pawl 14 is thrown out of action by depressing a key 233, and the keys then remain depressed after each actuation of the apparatus.

FIG.3.

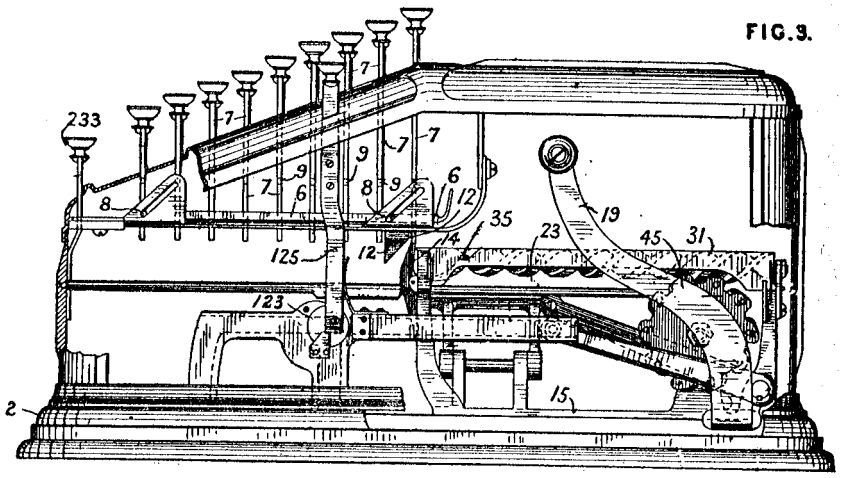

FIG.19.

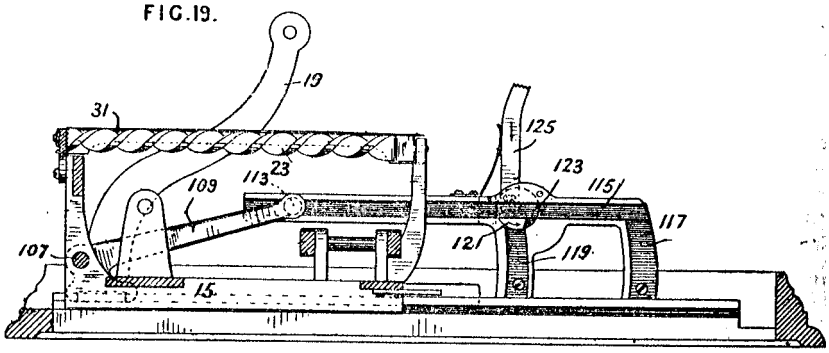

The movements of the screw shafts 23 are communicated to ten-toothed worm-wheels 45, which are connected by sleeves to separate item-printing type-wheels 47, Fig. 21. These type-wheels 47 return to zero on each backward movement of the carriage; the type-wheels 49, however, are for printing totals, and must therefore be continuously advanced. For this purpose, they are mounted loosely on the shaft 53 carried by rocking arms 61 having an extension arm 67. A pin 73 projects from this arm into one or other of the slots 71, 69 in the casing of the apparatus. During the forward movement of the carriage the pin travels in the slot 71, and the wheels 49 are held in engagement, as shown Fig. 21, with the idle transfer-wheels 75, so as to receive movement from the wheels 47. At the end of the forward movement the pin 73 is switched into the slot 69, and, in the back stroke, travels along it so that the wheels 49 are held out of gear with the wheels 75 but in gear with locking-detents 50. When the actuation has been completed, the pin is switched back again into the slot 71. "Carrying" on the type-wheels 49 is effected by mounting the transfer-wheels 75 in vertically-moving standards 79, normally held in their highest position by hooks 97 on levers 95 but having springs 99 which tend to depress them. Whenever in the forward movement of the carriage a wheel 49 moves from 9 to 0, a pin 103 trips the lever 95 of the wheel of the next higher denomination, the standard 79 is pulled down by its spring till it rests upon the cross-bar 89, and the wheel 75 gives a one-step movement to the next type-wheel 49. During the return movement of the carriage, when the wheels 49 are out of gear with the wheels 75, the cross-bar 89 runs over the pivoted inclines 101, under which it passed in the forward movement, and the standards are raised and re-engaged by their hooks. "Zeroizing" is effected by turning the shaft 53 in the direction of the arrow. Discs 55 fast to the shaft carry spring dogs 59, which pick up pins 57 on the type-wheels 49 and turn them forward to zero position. The rotation of the shaft 53 is effected, on the backward movement of the carriage, by a toothed wheel upon it engaging a fixed rack. Normally, the wheel is locked by a spring lever, and the rack, which is mounted on a rock shaft, is out of gear; but on depressing a special key 86, Fig. 1, marked "O," the lever is thrown back and the rack turned into position to engage the wheels. The record paper strip is wound on a

© B O B Williams Printed22/11/2023 CalcPatents Ed. 1.doc

Shattuck Mfg Co 28737/1902 Printing adder

28,737. Fairweather, W., [*Shattuck Manufacturing Co.*]. Dec. 30.

Calculating-apparatus.—In calculating - apparatus, which may be used in combination with, or independently of, a printing-apparatus, the recording and printing wheels 16, 17 are operated by inserting, opposite a number on the face-plate, Fig. 1, a stylus or tool through the slots 11 to engage with the helical groove in the corresponding roller 10. Upon pulling the stylus towards the front of the machine to perform an addition, the spring-pressed shaft 7 is first moved longitudinally to disengage its Geneva or other stop gearing 18, 19, 20, 21 from that of the shafts recording lower denominations, and is then rotated, while a

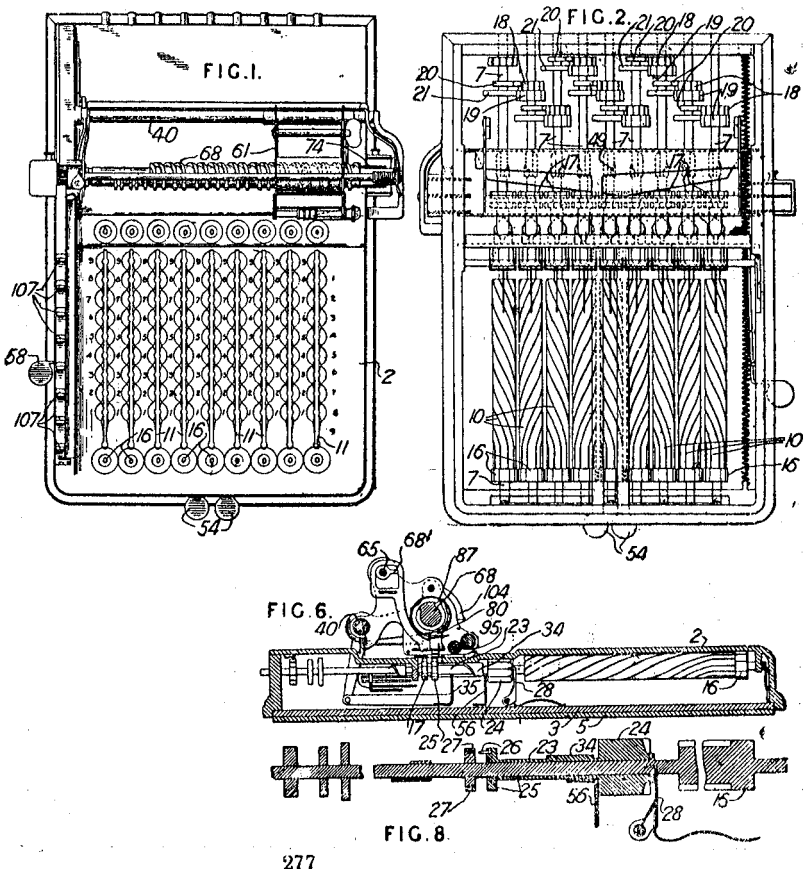

277

More omitted

Shattuck Mfg Co 28739/1902 Stylus adder

28,739. Fairweather, W., [*Shattuck Manufacturing Co.*]. Dec. 30.

Calculating-apparatus for solving problems in addition and subtraction, operated by the metal point 21 of a hand-tool 20, comprises a figured plate or face, which is divided into columns by slots 5, through which the operating-tool works upon the spirally-grooved rollers 6. The figure plates are inclined, and the figure spaces are separated by raised lugs 22, to facilitate the accurate introduction of the point 21 of the tool 20. The shafts of the rollers 6 carry, at the one end, the figure wheels 11, and, at the other, the intermittent gear, which preferably comprises a locking-disc 15 provided with a single tooth 16, and a ten-tooth gear 17 provided with concave surfaces which interlock with the locking-disc upon the shaft to the right. The gears 17 are sufficiently wide to allow, when making an addition, of the shafts 6 being drawn forwards against the action of the springs 14 by the insertion of the point 21 in the grooves of the rollers, and thus disconnecting the roller concerned from the locking-disc to the right. The movement of the point 21 then causes the roller to rotate and communicate movement to the shafts at the left, until the tool is withdrawn at the straight part 8 of the groove, whereupon the spring 14 forces the shaft back to the position in which it is interlocked with the gears to the right. In subtracting a number, the tool is forced backwards, the gearing being in this case disconnected by pushing the projecting end 25 of the shaft of the roller required. The number of grooves in each roller or the number of turns of the single spiral may be varied to suit the relative value of the article to be counted, and a longitudinally-movable rack or bar may be provided for returning the figure wheels 11 to zero. Additional gears may be employed as a further preventative against overthrowing.

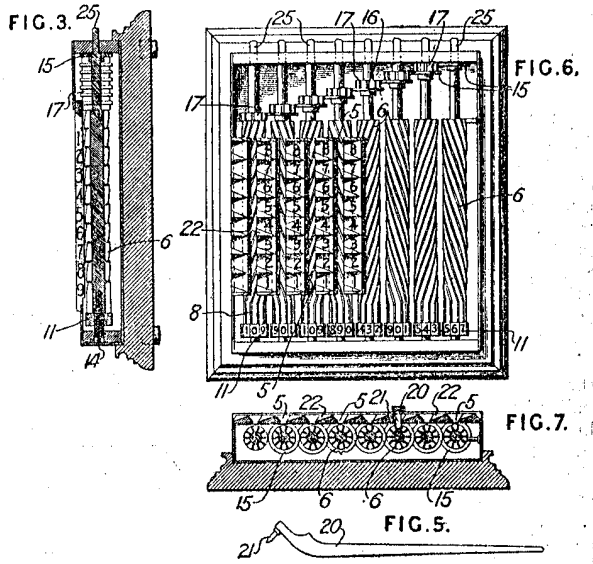

More omitted

Shaw H S H 6206/1884 Ratio of angular velocity

6206. Shaw, H. S. H. April 10.

FIG. 1.

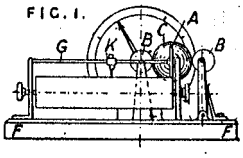

FIG. 2

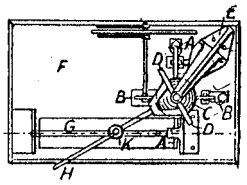

Speed indicators; calculating - apparatus — Relates to apparatus for determining the velocity ratio of rotating bodies. The apparatus consists of a sphere so supported between two sets of rollers, one in a movable and the other in a fixed frame, that it can transmit the rotation of one roller to another in any desired velocity ratio determined by the position of the movable frame. Figs. 1 and 2 are an elevation and plan of the apparatus; in the former, the movable frame and its supporting-bracket are removed. C is the sphere, in contact with the four rollers A, A, B, B which are mounted 90° from each other in the fixed frame F, and the points of contact of which lie in the horizontal diametral plane. D is the movable frame supported by the bracket E on pivots, so that it can turn about a vertical axis. It is provided with four rollers in contact with the sphere, the points of contact of which lie in the plane of the frame. Two of these rollers are at the ends of the vertical diameter of the sphere, and their rotation is at right angles to the plane of the frame; the other two, which are small, are at the extremities of the horizontal diameter, and act as centres about which the sphere revolves. It follows that the sphere will always rotate on the horizontal axis in the plane of the movable frame, while the rollers A, A, B, B will move over small circles on the sphere. The velocities of the rollers A, A and B, B will be proportional to the radii of these small circles, and consequently their velocity ratio equal to the tangent of the inclination of the frame D to the rollers. The sphere may also be rotated by giving motion to one of the rollers at the extremities of the vertical diameter, when the velocity-ratio is expressed by the sine of the same angle. The instrument may be used to compare velocities, or as a calculating-machine to integrate areas &c. To compare the velocities of two shafts for instance, their motion is imparted to the axes of A and B respectively. The axis of A is a screw G upon which A works as a loose nut. A bar H rigidly attached at right-angles to the movable frame passes through a swivel head on the slide K. If the screw G and roller A rotate at different speeds, the screw changes the position of the movable frame until the difference no longer exists; the position of the slide then shows the velocity ratio.

Shephard H 110851 of 1917 Adder for workmen's hours

110,851. Shephard, H. Jan. 29, 1917.

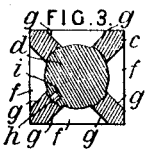

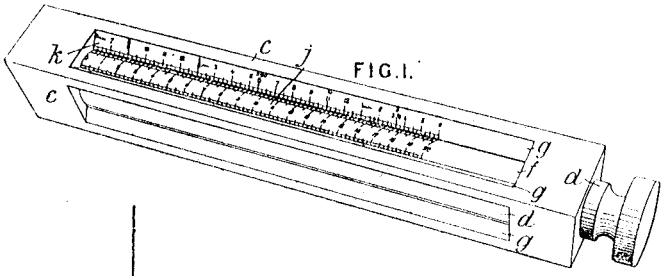

Adding and subtracting apparatus.—A calculator for periods of time worked by workmen comprises a fixed broken-time scale *k* which co-operates with a full-time scale *j* mounted upon an axially movable carrier *d*. A pin *h* projecting into a slot *i* in the carrier prevents its rotation. The scale *k* is mounted upon a square case *c* provided with one or more slots *f* and different broken-time scales may be provided upon the eight surfaces afforded by the bevelled edges *g* of the slots. In modifications the case is triangular or flat in section, thus affording different numbers of broken-time scales.

Sheppard F H 3059/1878 Slide rule

3059. Sheppard, F. H. Aug. 2.

FIG. 5

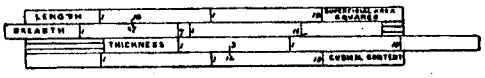

Slide-rules, divided either according to the decimal or duodecimal system, have two or more slides, reversible or not, contained in one, two, or more grooved carriers. The body of the rule is made with two fixed or standing parts between which is a concealed guide. Grooves are thus formed which contain two reversible slides marked on both faces. The face of the rule is marked for length, breadth, thickness, cubical content, superficial area, and squares, as shown, while square roots and numbers are marked on the reverse face of the slides. Fig. 5 shows a rule arranged to show the product of 18′ × 7′ × 3′, in yards, which is found to be 14 under the figure 3 on the line of thickness. This form of rule is also peculiarly adapted for computing at one operation the root of the sum or difference of two squares, as required in finding the third side of a right-angled triangle.

See [28]

Sheridan M J 14623/1896 Slide rule to dilute spirits

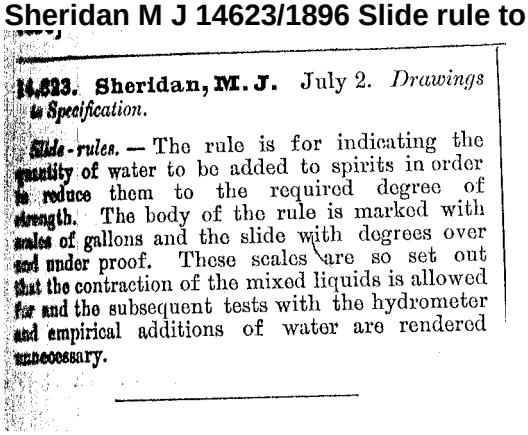

14,623. **Sheridan, M. J.** July 2. *Drawings to Specification.*

Slide-rules. — The rule is for indicating the quantity of water to be added to spirits in order to reduce them to the required degree of strength. The body of the rule is marked with scales of gallons and the slide with degrees over and under proof. These scales are so set out that the contraction of the mixed liquids is allowed for and the subsequent tests with the hydrometer and empirical additions of water are rendered unnecessary.

Shiek D W 8648/1904 Adder

8648. Shiek, D. W. April 15.

FIG. 1.

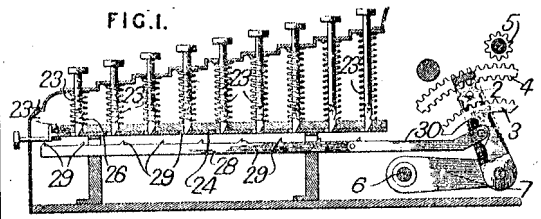

Calculating-apparatus.—In order to obtain a rotation of a spindle to a degree corresponding to the value of a given key of a keyboard, the key on being depressed serves to limit the movement of a bar, and this limited movement governs the motion of the spindle. The bar 28 has teeth 29 which, before the bar is moved, are at distances from the ends of the key-rods 23 corresponding with the values of the keys, and the bar is connected by the link 30 to the sector 3. The arm carrying the pinion 2 moves a fixed distance to the right, and the pinion moves the sector 3 until the end of the depressed key meets the nearest tooth 29, when the sector 3 stops and the rest of the movement of the pinion is communicated to the sector 4, and by it to the pinion 5. If required, the pinion 5 only gears with the sector during the forward movement described; the arm is carried by links 7 pivoted at 6, and the movement of a handle lifts the links 7 and then rotates the arm forward, while in the return movement it allows the arm to drop. A key when depressed is retained till required by the bar 24, pressed by a spring into a notch in the key-bar. The forms and positions of the sectors 3, 4 and the pinion 2 are interchangeable, and the sectors may be replaced by racks, the pinion 2 being allowed freedom of movement along the arm carrying it, or the pinion may be replaced by a double lever with grooves in which slide pins on bars 3, 4.

Siemens 20907/1913 Trig vectors

0,907. Siemens Bros. & Co., and **Jacob, F.** Sept. 16.

Plane-trigonometry calculators. — An apparatus for ascertaining the magnitude and direction of the resultant of two vector quantities comprises a circular arc D, Fig. 1, and a rotating-arm F carrying a protractor E. The centre of the arc P can be set at a known distance from a given point O along a fixed diameter, and when the arm is rotated about this point, the intersection of the arm with the arc determines the resultant of the vectors O P, P Q. In the construction shown in Fig. 2, the resultant is read off along the arm F pivoted at O, and its inclination to the fixed diameter is shown by the vernier M on the arcs E in degrees and circular measure.

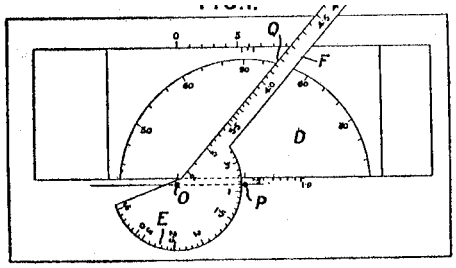

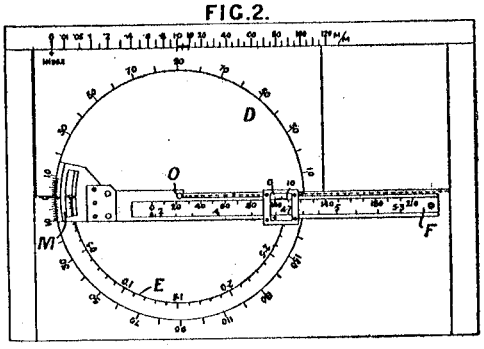

FIG.2.

Silversides, Dudding & Megson 10112/1884 Navigation device

10,112. Silversides, J., Dudding, W., and **Megson, H.** July 14.

Calculating-apparatus for use in navigation. The instrument consists of a rectangular plate on which is a quadrant A, B divided into degrees and also into points and quarter points of the compass. A radial arm C divided into degrees and sixths of a degree is pivoted at D, the centre of the quadrant being attached to the horizontal scale similarly divided. A movable perpendicular E, divided in a similar way, slides on the horizontal arm. The mercator scale F slides between bars and is diagonally divided. The different scales are provided with verniers. G is a scale showing the relation between time and longitude. H is a "course corrector," and consists of a compass card and index, turning independently; by means of it the true course can be corrected for variation with reference to steering, and the compass course for leeway and variation in order to correct reckoning.

(*For Drawing see next page.*)

33 C

10,112.

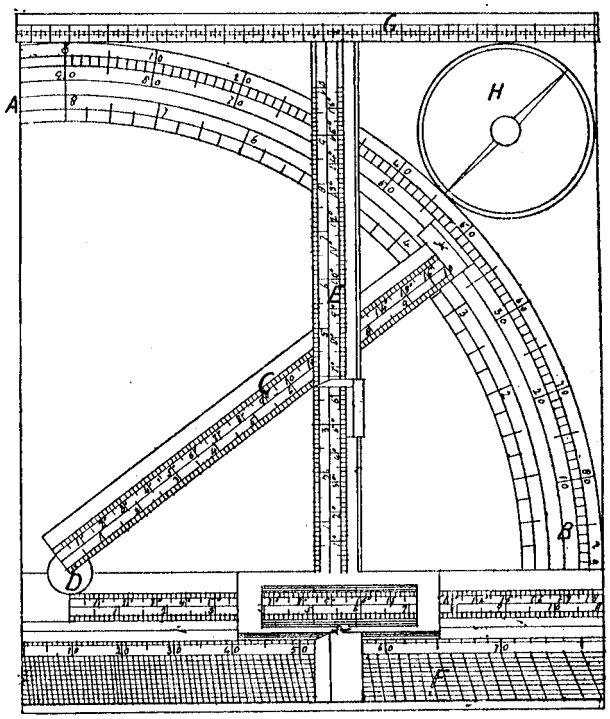

Simmons N 23733/1896 Scales on pressure temp dials

23,733. Simmons, N. Oct. 26.

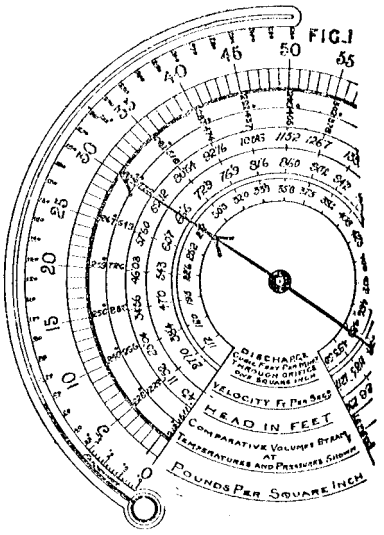

Pressure gauges and thermometers. The dial of the gauge is marked with concentric scales, giving information of various kinds. In the example shown the scales show corresponding scales of pressure, temperature, and volumes of steam, head of water, velocity, and cubical discharge through a square inch aperture of water under such head. The scales may be marked partly on a front dial and partly on the back, or separate dials and pointers actuated by or from the same Bourdon tube may be employed. A thermometer is combined with the gauge, and may have all the three common thermometric scales marked beside its tube.

Simone M G de 9738/1915 Analyse wages to coins

9738. Simone, M. G. de. July 3, 1914 [*Convention date*].

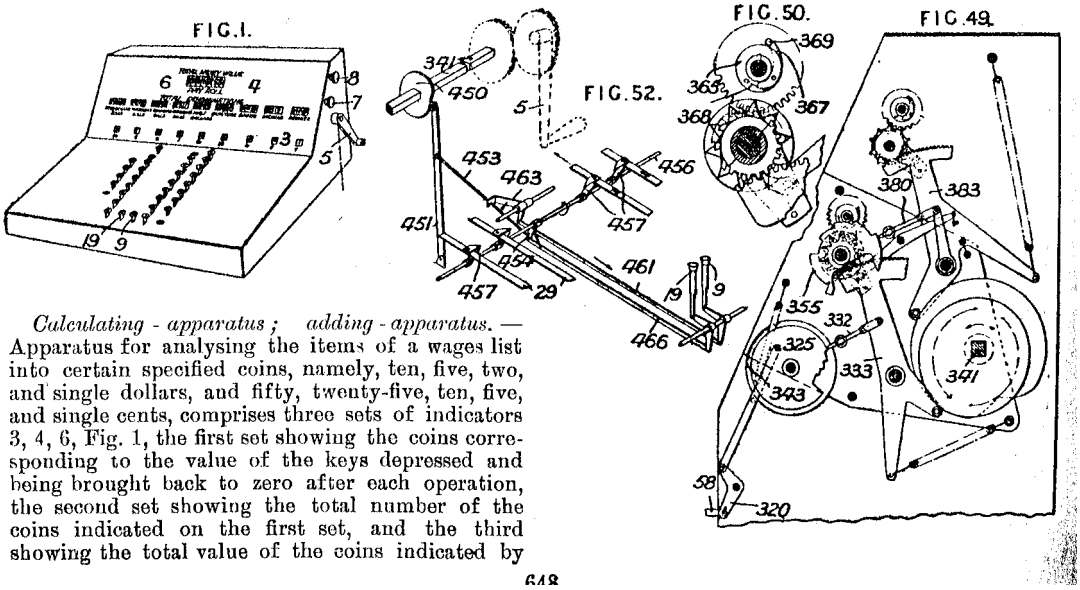

Calculating - apparatus; adding - apparatus. — Apparatus for analysing the items of a wages list into certain specified coins, namely, ten, five, two, and single dollars, and fifty, twenty-five, ten, five, and single cents, comprises three sets of indicators 3, 4, 6, Fig. 1, the first set showing the coins corresponding to the value of the keys depressed and being brought back to zero after each operation, the second set showing the total number of the coins indicated on the first set, and the third showing the total value of the coins indicated by

648

Simpson & Woods 28783/1911 Planimeter

28,783. Simpson, F., and **Woods, A. R. T.** Dec. 21.

FIG.1.

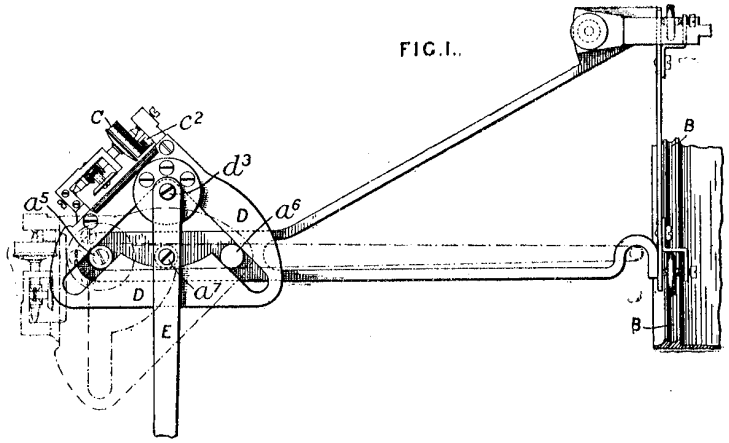

Planimeters.—Apparatus of the kind in which the integrating-wheel is mounted on a secondary frame geared to the tracing-arm is arranged to integrate $\sqrt{y}\,dx$ and so is adapted for use with the records of fluid-flow meters. The usual frame, counterbalanced and guided on a rail B, has a pivot a^7 for the tracing-arm E and a pair of guiding-studs a^5, a^6 working in a right-angled slot in a frame D carrying the integrating-counter C. The tracing-arm is also pivoted at d^3 to the frame D so that the frame moves with half the angular velocity of the tracing-arm. The integrating-wheel C is divided to read against a vernier c^2 and gives the higher digits on a worm-wheel. The counter may alternatively be mounted on a block a^8 on one of the studs and guided by one arm of the right-angled slot in the frame.

FIG.5.

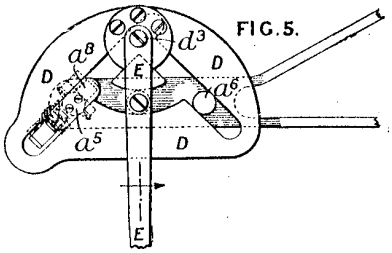

Simpson L 6298/ 1909

6298. Preston, W. R., [*Simpson, L.*]. March 16.

Logarithmic tabular calculators. — An instrument for the conversion of measurements, weights, &c., from one denomination to another comprises a suitably-shaped pivoted disk *a* with a logarithmic scale on its circumference moving over or in an opening in a masking-card *b* with openings *g*, through which the various designations of measures are exhibited. These words are suitably arranged on a sliding member moving in guides beneath the mask, and are spaced in different circles, so that, when the arrow *j* on the slider is opposite a given designation on the list in the top right-hand corner, the various units in which such quantities are expressed appear in the windows opposite the correct part of the scale. By turning the disk so as to set any number opposite to the indicating-mark for a quantity in one unit, the equivalent in other units is read at the indicating mark opposite to the window at which that unit appears. The slider is held in its various positions by a spring pawl engaging notches therein. The slider may be replaced by a travelling band sheet or ribbon.

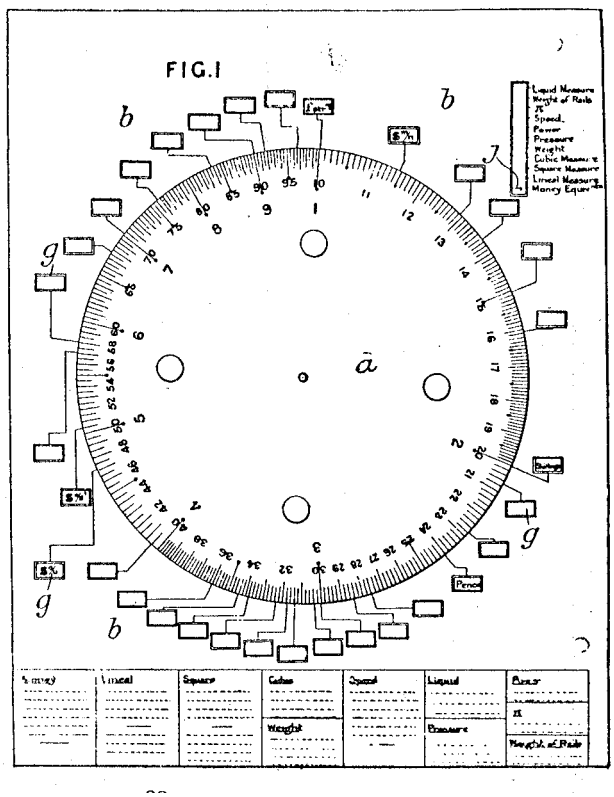

Simtion P 25345/1912 Tab calc

25,345. Simtion, P. Nov. 5.

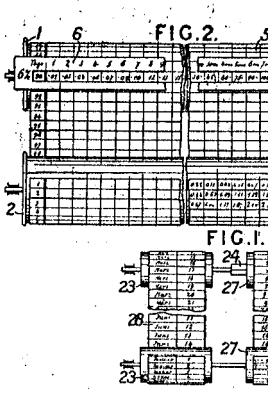

Tabular calculators. — Appa puting the number of days betv and the interest on sums of periods at given rates per cent a flexible-strip or a disk form o apparatus together with int means consisting of flexible st pairs of rollers. In the for shown in Figs. 1 and 2, a ca is printed on each side of the flexible strip 28 and columns of intervals in reverse order on the strip 29, one side being for a 360-day year and the other for a 365-day year. The numerals on the front of the strip 29 run from 0 to 180 and are repeated twice. By setting one date on the strip 28 against the zero in the centre of the strip 29, the interval between the given date and a preceeding or succeeding date can be determined. The rollers 27 upon which the strip 29 is mounted are provided with squared sleeves 24 capable of sliding laterally without moving the rollers so that the pairs of buttons 25, 26, and 21, 22 of the rollers 27, 23 respectively can be turned independently, or so that the outer roughened surface of the buttons 25, 26 may engage with the corresponding inner surfaces of the buttons 21, 22 and both pairs be turned together. The interest-computing portion of the apparatus comprises a flexible sheet 5 mounted on rollers 1, 2 and having a column of intervals expressed in days along each edge of the sheet: the interest on the sums of money marked along the upper edge of one or more apertures 6 in the casing at the rate shown thereon for the period shown (in this case 90 days) appears in the said apertures. One side of the sheet shows the interest at one rate and the other side in a different rate per cent. In a second form of apparatus (not shown) the setting of the two dates by means of disks and pointers moves a toothed segment which, in turn, through a train of pinions sets interest-computing tables for the required interval. The number of rollers and bands employed may be varied, and the intervals may be printed transversely on the band, the band 29 in this case resembling the band 5 shown in Fig. 2.

Skipworth G P 884/1888 Computing scale

884. Skipworth, G. P. Jan. 20.

Price and value, indicating. — In a spring machine the movement of the centre rod, and in a steelyard machine the movement of the sliding weight, is imparted to a drum marked with values of the weights at various rates. The Figure shows the construction of a steelyard machine. The steelyard is formed by a rectangular frame C and a graduated bar F. It is pivoted on knife-edges at the centre of the sides

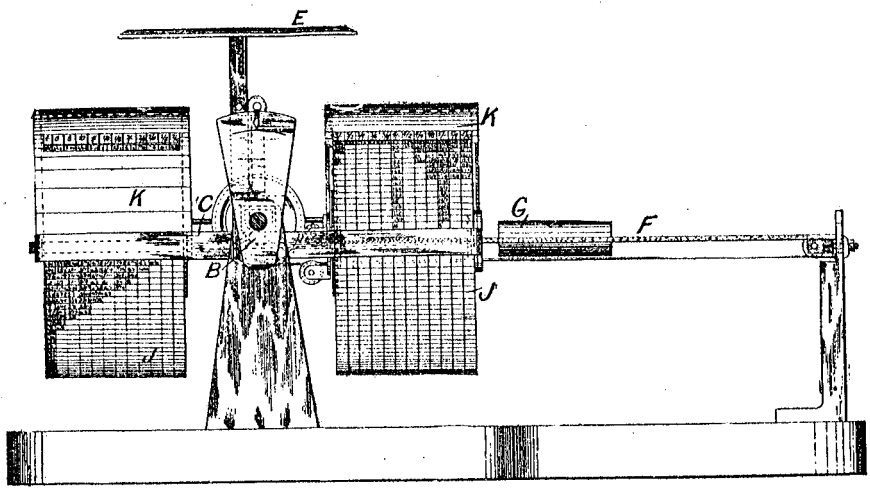

Sloan R H 22306/1911 Tab calc for wages

22,306. Mills, C. K., [*Sloan, R. H.*]. Oct. 10.

FIG.4.

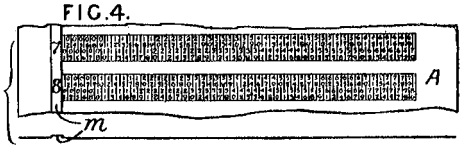

FIG.5.

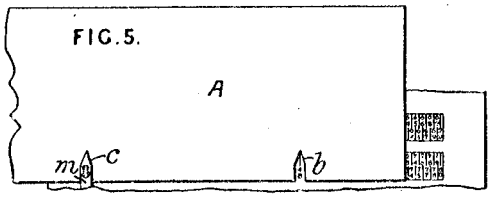

Computing - scales. — A device in connexion with workmen's time-recorders, for the determination of elapsed time and the monetary value corresponding thereto, comprises a card A in the body or edge of which are punched, by the apparatus described in Specification 22,305/11, [*Class* 106(iv), Indicating &c.], slots or the like *b*, *c*, the distance apart

28(

of which is proportional to the time between the two operations. For use in conjunction with the ticket is a scale bearing a series of monetary values calculated for every tenth part of an hour, each set being placed opposite the corresponding rate per hour. To decrease the length of the scale, the values are alternated across the width of each separate rate scale, the notches in the card being made sufficiently deep to cover them. The rates per hour are arranged vertically on the scale and may be mounted on projections *m* corresponding in shape to the notches, so that the card is easily placed in position, or the end of the card is pressed against a flange *m*, or the notch is merely placed over the monetary rate.

Sloan R H 28662/1913 Tab calc

28,662. Sloan, R. H. Dec. 11. [*Addition to* 9502/13.] *No Patent granted (Sealing fee not paid).*

FIG. 1.

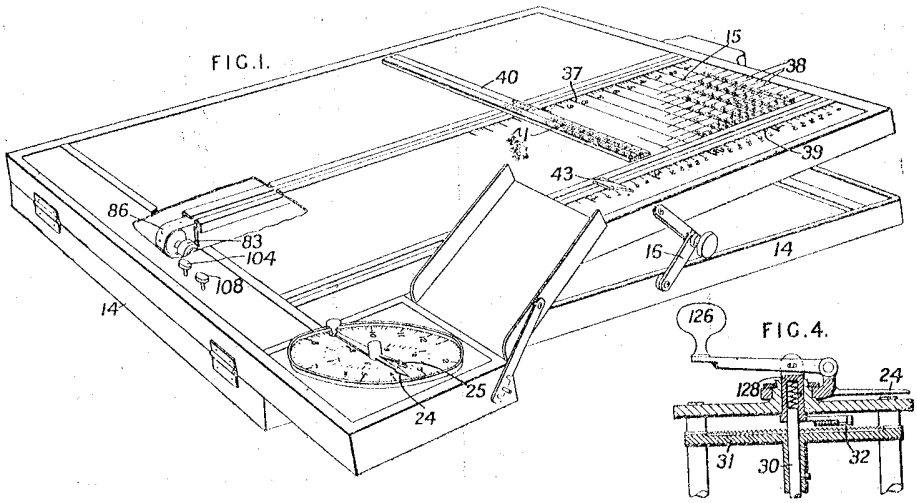

FIG. 4.

Tabular calculators.—In the apparatus described in the parent Specification for computing the hours worked from the times of commencing and finishing work, summing the hours worked daily into weekly totals, and indicating the wages due at various rates of payment, (1) the part carrying the wage scale 15, Fig. 1, and the elapsed-time scales 37, 39 is hinged to the base 14, and can be supported at any angle by links 16; (2) the method of clutching the setting-pointer or pointers to a co-axial spindle is modified; (3) the elapsed-time and wages indicator, adapted to sum weekly totals of hours worked and wages earned, and the elapsed time indicator for computing the period worked each day are separately mounted on carriages and driven independently at different speeds from the pointer which is set to the hours of starting and finishing work respectively; (4) clutches are provided connecting the two indicators to the shaft actuated by the pointer, and (5) means are provided for automatically returning the indicators to normal position after the elapsed time and wages for a given period or the day's working period have been computed. The pointers 24, 25, Fig. 2, are fixed together, and either the former is set to the hour of commencing work as shown on the outer scale 22, or, in the case of overtime, the latter is set to the inner scale 23, each division of which is of double value. These settings are effected by means of the handle 126, Fig. 4, in its undepressed position. (2) The handle is then depressed so as to clutch the pointers 24, 25 to the spindle 30, and the pointers moved so that one of them points to the hour of finishing work on the appropriate normal or overtime scales, the allowance of the half-hour for luncheon being made, as before, between 12 and 1 p.m. on the former scale. The depression of the handle 126 lowers a spring-controlled sleeve 128 carrying a clutch-arm 32 so as to cause the arm

FIG. 2.

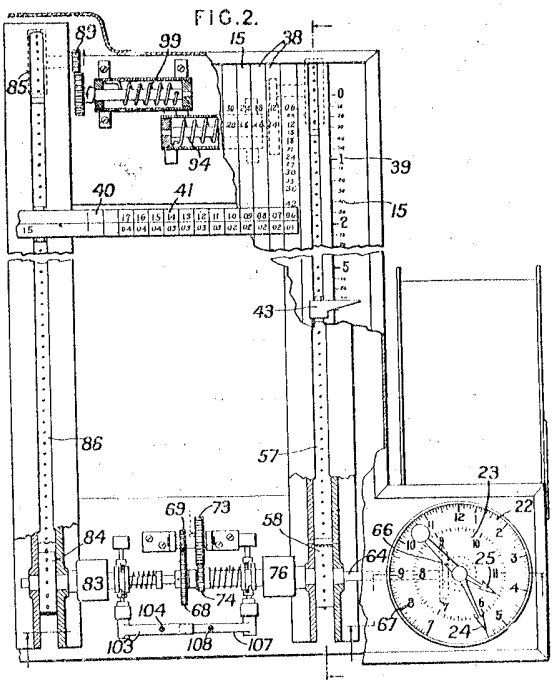

to engage the corrugated disk 31. (3) The movement of the spindle 30 is communicated to a shaft 64 through a pair of bevel-wheels 67, 66, Fig. 2. The shaft carries a pair of disk-clutches 76, 83, described below, adapted to transmit motion to the pulleys 58, 84 which co-operate with pulleys 89, 85, respectively, in supporting endless travelling bands 57, 86. Gearing 68, 69, 73, 74 is arranged on the shaft 64 so as to cause

the pulley 58 and band 57 to move four times as fast as the shaft and the pulley 84 and band 86. The band 57 controls the elapsed-time indicator 43 which co-operates with a time scale 39; the band 86 drives the transverse elapsed-time and wages indicator 40, having a scale 41 of wage-rates per hour in cents, and a quarter-hour scale beneath. The scale 39 indicates the period worked in any day and shows ten-minute intervals, the linear value of a unit on this scale being four times that of a unit on the scale 37, Fig. 1, which indicates the weekly totals of hours worked; the scale 41 on the indicator 40 co-operates as before with the columns 38 of the wages-table 15 so as to enable the wages for the computed period to be read. The indicators 43, 40 are mounted on carriages guided by rollers. (4) The clutches 76, 83 comprise groups of disks normally forced into engagement with each other by means of springs. By the depression of the key 104 the two clutch collars are moved against the pressure of their springs through overlying levers 103, 107, and the disk simultaneously disengaged; or the disks of the clutch 76 can be separately disengaged and maintained, if desired, in this position, by the actuation of the key 108, which can be locked by a pin and bayonet-slot. (5) As soon as either or both of the clutches 76, 83 are so disengaged, the corresponding travelling band 57, 86 together with the indicators 43, 40, are respectively returned to zero by springs 94, 99, which were wound up when the indicators were moved to show the elapsed times and wages. Thus, as soon as a computation is finished, the depression of the key 104 causes both indicators to return to zero: for the computation of each day's work the indicator 43 can be separately zeroized, or may be kept inactive by the temporary or permanent-depression of the key 108.

Smith A 10160/1897 Tab calc for pricing length

10,160. Smith, A. April 23.

Calculating - apparatus; measures of length.—Relates to apparatus for showing the cost of lengths of material as it is measured out. Adjacent to the measure n^4, Fig. 4, fixed to the counter b^2, are tappets m, m^1, m^2, m^3, one of which is pressed down as the material is measured and operates an escapement mechanism controlling the rotation of the cost indicating-drum a, Fig. 2, which shows through a slot in the counter adjacent to a price-indicating scale t. The drum is driven by a spring c and returned to normal position by pulling a cord u. When a tappet m &c. is pressed it acts through a bell-crank lever on the corresponding slide p, p^1, p^2, or p^3, moving it to the right, and by the pin r rocking the escapement lever s, h. The drum is then free to turn until a lever k strikes the projecting end of the slide, the stroke being greater or less according to the tappet pressed. For example, if $3\frac{1}{4}$ yards at $5d$. are required, the tappet m^3 is pressed three times as the yards are measured, and then the tappet m once for the quarter. The length scale at the left of the drum will now show $3\frac{1}{4}$, and under 5 on the price scale will be found the cost $1s.$ $4\frac{1}{4}d.$

FIG.2.

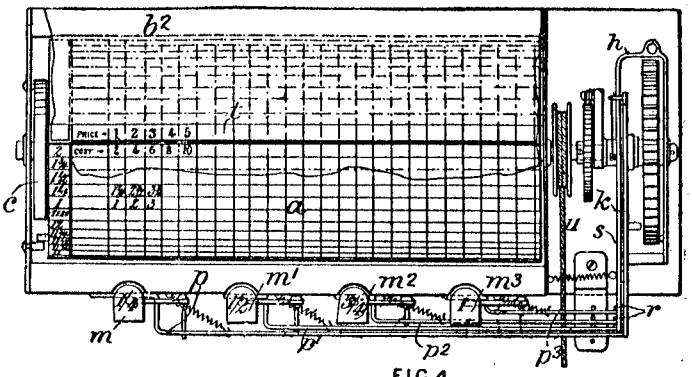

FIG.4.



Smith A E 13514/1905 Circ disc bridge scorer

13,514. Smith, A. E. July 1.

Calculating-apparatus.—In a device for scoring games and showing the difference between the scores of the opposing players, three disks having graduated rings *n*, *p*, *o* are employed. The middle ring *p* is fixed, while the rings *n*, *o* are revoluble.

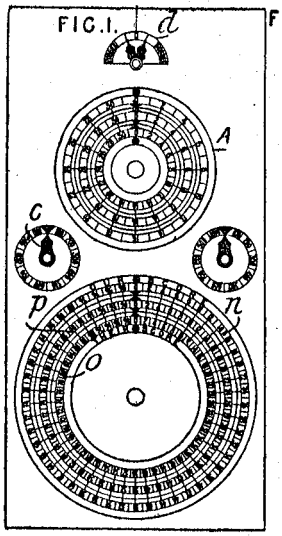



Each score is worked by moving the zero of the corresponding movable ring to the number on the fixed ring *p* representing it. The difference between the scores is indicated on the ring having the lower score opposite the number on the fixed ring representing the higher score. In a modification, the moving rings are replaced by straight slides which move in contact with a fixed scale placed between them.

Smith A E 21879/1913 Tab calc cylinder

21,879. Smith, A. E. Sept. 29.

FIG. 1.

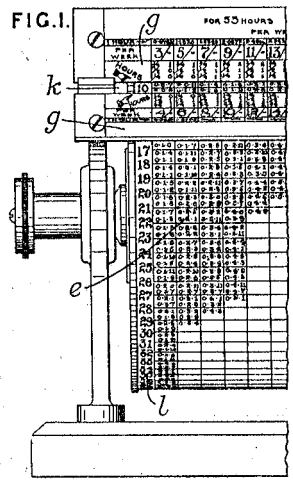

Tabular calculators of the cylinder and graduated reading-slot type. The quantities tabulated are the amount of wages for various numbers of hours according to the various rates. The numbers of hours are arranged around the ends *l* of the cylinder *c*, and corresponding to each hour are two rows of quantities upon the cylinder, placed sufficiently close to be visible at the same time through the reading-slot *k* provided in a board *g* carrying the wage-rates in two rows, one above and the other below the slot, so as to correspond with the two rows of quantities. The rates are expressed in the sum to be paid for a week of 53 hours, and amounts corresponding to fractions of an hour are given upon the boards bearing the wage-rate arguments.

Smith C J & Kleeberg P 3611/1912 Tab calc

3611. Smith, C. J., and **Kleeberg, P.** Feb. 13.

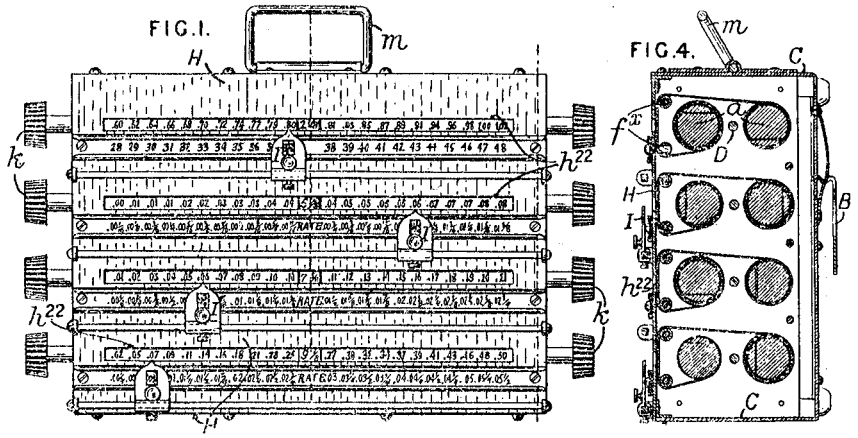

Tabular calculators. — Series of tables are mounted on pairs of rollers *a*, *a*, Fig. 4, which are operated by gearing from central shafts D as shown in Fig. 5, the opposite ends of the shafts D bearing milled heads *k*. Among the features described are (1) various details of construction of the framework which, as shown in Fig. 6, has inner and outer portions F, F and E, E respectively, an apertured face-plate H, and a bent plate C forming three sides of

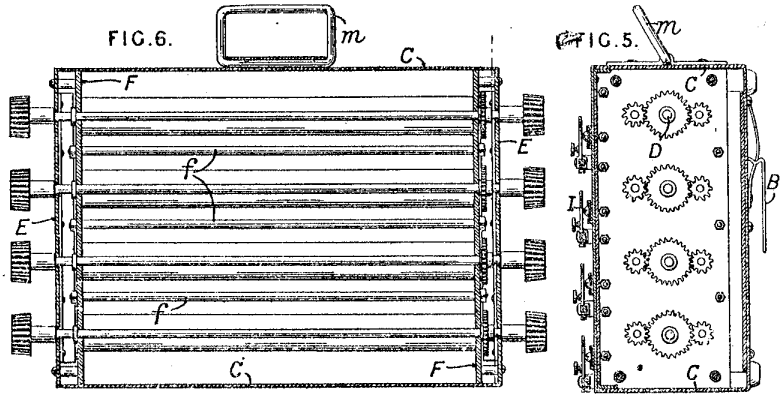

the structure; (2) the provision of sliding indicators I, a foot or support B, and a ring *m* by means of which the apparatus can be carried; (3) the tubes f^x, Fig. 4, which support the computing-tables so as to present portions thereof at the apertures h^{22}.

Smith E W136090 of 1919 slide rule reading aid

136,090. Smith, E. W. May 7, 1919.

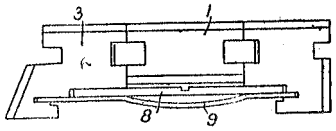

Slide-rules.—Friction between the slide 1 and the side members 3 of slide-rules is produced by means of a spring back 9 connecting the separate side members 3, the back being slightly bowed at its centre. Between the parts 3 and the spring plate is clamped, by screws or nails which pass through both members into the part 3, a celluloid scale plate 8 slighty grooved at the centre to facilitate bending and formed with plain edges.

which is marked along one of its edges with index lines *h*, *i*, *j* preferably stepped and arranged transverse to the length of the scale in alinement with the ends of the subdivision lines and marked with numerical values which give an indication of the value of the subdivision when the edge of the

FIG.1.

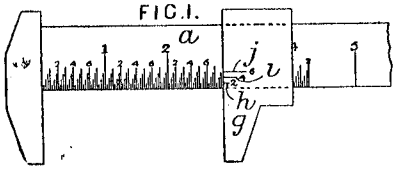

member *g* has been set. In a modification the even and odd graduations of the scale *a* are marked on the base line and upper-edge respectively and the index lines of the sliding member *g* are arranged accordingly.

Watkins J C 12189/1866 Timber slide rule

12,189. Watkins, J. C. Sept. 25.

Cubing timber.—The invention consists in marking a measuring-tape on one side with inches and parts thereof, Fig. 1, and on the other with corresponding divisions, Fig. 2, graduated to show the cubical contents of one linear foot of a log having a "quarter girt" of the size shown by the linear measure.

FIG. 1.

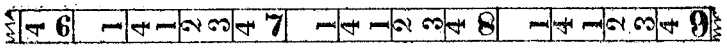

FIG. 2.

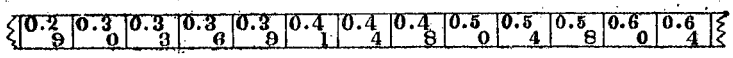

Smith H A 3991/1902 Hand Adder

3991. Smith, H. A. Feb. 17.

Calculating - apparatus. —A hand instrument is provided, for adding up the tens in casting up a column of figures. From a rectangular tube 1 which is held as a pencil, a ratchet bar 7 having numbered teeth is extruded one tooth for each ten to be added, by a pawl 12 attached to a stylus 13 and backed by a spring 19. A slot 22 in the tube engaging a stud 21 on the pawl limits the action, as required, to a single tooth at a time.

FIG. 3.

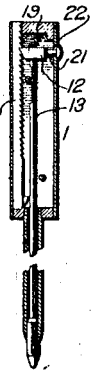

Smith J W & Davis H 2610/1905 Divide wages

2610. Smith, J. W., and **Davis, H.** Feb. 9.

Calculating-apparatus.—An appliance for facilitating the division of a sum of money in definite proportions consists of two similar but relatively movable logarithmic scales graduated in terms of money. Thus, when a sum of money in excess of the total time wage is to be divided between a number of persons, in proportion to their individual time wages, either the balance or the total sum on one scale is set against the total time wage on the other, and the excess or wage or total wage, respectively, for each person is read off against their time wage. One of the scales may be marked in terms of time, or the monetary divisions for pence and shillings may be taken as equivalent to five-minute periods and hours, respectively. In the form shown, the scales are marked on the edges of two wheels 1, 2, mounted independently, but with a certain amount of friction between them, in a frame 3, on which a small desk 4 may be provided. The scales may be spiral or helical, and cursors may be used. A single scale may be used in conjunction with two movable indexes.

FIG. II.

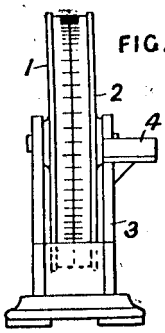

SMITH-DAVIS PREMIUM CALCULATOR

Patent No. 2610.

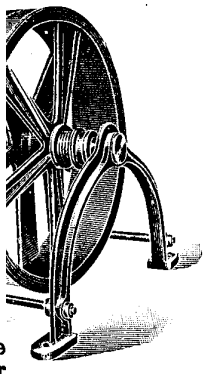

Object of the Instrument.

This Premium Calculator is a time and labour-saving device to be used for quickly finding, without performing the usual sum in proportion, the time allowance that has to be added to the actual time occupied, when the latter is less than the agreed contract time.

Description of Instrument.

The instrument, as illustrated, is provided with two similar scales, approximately 1 metre long, divided and figured to give premium time readings from zero up to 100 hours.

There are three sets of divisions, inner, middle, and outer, lying side by side on each of the two scales.

scales, which are engine divided on strips of celluloid to ensure
are affixed to the rims of two similar metal wheels about 12½ inches
er, and so arranged that the divided edges come together. The
e mounted on a spindle which is carried at each end in bearings
a supporting stand.
wheels are pressed together by a spring which is sufficiently strong to
to revolve in unison when either is rotated. The amount of friction
e wheels can be adjusted to suit the operator by a simple adjustment.
nstrument is arranged to be entirely operated by the left hand, thus
e right hand free to jot down results. This is accomplished by a
ch automatically prevents the right hand wheel from turning when
nd wheel is rotated. The operator having placed the "time saved"
he scales on the right hand wheel before him, the wheel becomes
d the left hand wheel can then be rotated independently, until the
ontract time" value on the scales of the left hand wheel is adjusted to the "time saved" value on the right hand scales. This being done, both wheels can again be rotated as one. Send for full description.

ADVANTAGES.

- Immense time saver.
- Absolutely correct results.
- Dispenses with all reference tables.
- Obviates all calculations.
- Reduces chances of error to a minimum.
- Dreary drudgery annihilated.
- Divisions of scales made fine enough to suit all practical requirements.
- Result of sums in proportion obtained by a single setting.
- Automatic friction locking.
- Gives percentages if required.

Price of Smith-Davis Premium Calculator, **£10.** Cable Word, "SMAVIS."

REFERENCES.

"Our chief premium calculating clerk reports that your Premium Calculator is a great benefit, owing to it being more easily read than the circular slide rule previously used, and the eye strain is much less.

MAVOR & COULSON, Ld., Electrical Engineers, Glasgow."

"The Smith-Davis Premium Calculator supplied to us some time ago is working to our satisfaction, and for your information we would say that the machine is quick and accurate.

WALKER BROS. (Wigan), Ltd."

11

Smith J 12101/1891 Slide rule for navigation

12,101. Smith, J. July 16.

Slide-rules for navigation calculations. There are fixed scales A of logarithmic cosecants, height in feet, and angular altitudes, and there is a slide B graduated in distances in miles.

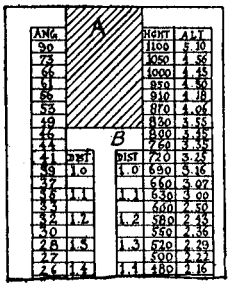

Smith M V 8793/1900 Days between dates

8793. Smith, M. V. May 12.

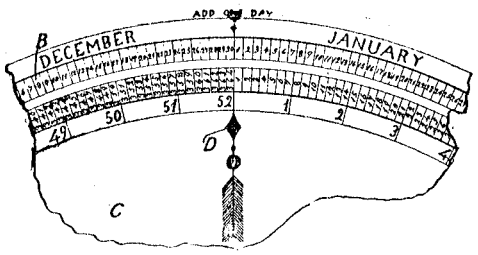

Calendars; calculating-apparatus.—The apparatus is for calculating dates or the number of days between dates, and consists of a ring C revolving in a fixed portion B and having an index D. The fixed portion B is divided into months and subdivided into days, December, however, being reckoned as having 30 days. This allows the ring C to be divided into 52 weeks exactly, and subdivided into 364 days. In all calculations extending from one year to the next one day is added; also a day is added for leap years when the 29th Feb. is included in the period considered.

Smith R C 24078/1897 same as US 592067 Slide Rule

24,078. Smith, R. C. Oct. 19.

Slide-rules.—The slides *e*, *e* and body *c* of the rule are protected by flexible transparent plates *b*, *d* and held together by clamps *a*, *a*, which can slide on the transparent plates and may be used also as an index. Auxiliary scales may be added, and two rules may be hinged together by a rod passing

79

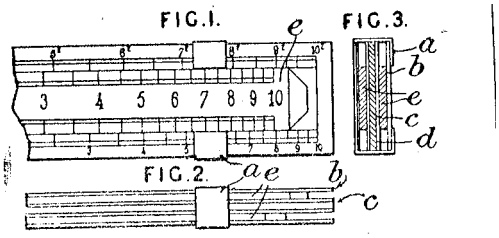

Smith R C US592067

(No Model.)

R. C. SMITH.

CALCULATING SCALE.

No. 592,067. Patented Oct. 19, 1897.

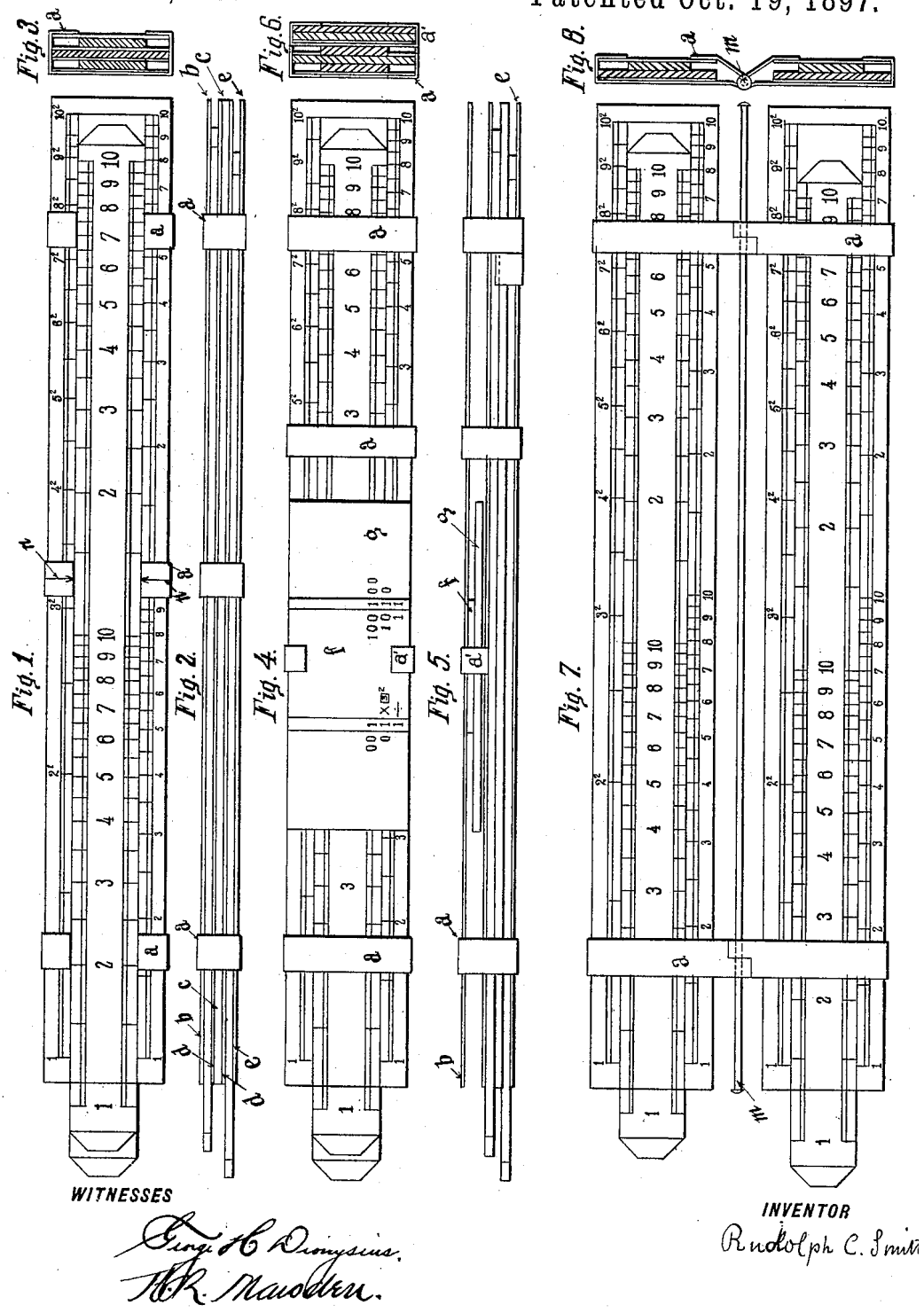

WITNESSES

Geo. H. Dionysius.
H. K. Maulden.

INVENTOR

Rudolph C. Smith

Smith R C & Cruickshank 7379/1900 see 24078/1897

7379. Smith, R. C., and **Cruickshank,**
April 24.

Slide-rules.—Relates to improvements on the in vention described in Specification No. 24,078, A 1897. A cardboard calculating-scale or slide-ru is provided with means for indicating the order tens in the result of a calculation. The scale of the stationary body 16 has exponents affixed its numbers, and the slide S¹, S² is divided into scales, and is guided by clamps 10 passing throu perforations in the body of the scale and bent o the flexible transparent plates of the main bod At the middle of the slide is a dividing-line 11

222

central line 12 on the transparent cover. On the slide S¹, S² and on the auxiliary slide 14 are engraved or printed columns of figures or conventional signs. Each sliding clamp 13 carries a flexible transparent plate, preferably of celluloid. A flexible transparent cover 18, attached to the back of the auxiliary scale by a clamp 15, may be placed between the flexible covers on the main rule. The auxiliary scale and slide are preferably of cardboard, enveloped in celluloid, held together by flexible plates, and having guiding-clamps 27. A sliding clamp 17 is provided to facilitate calculations. The slide 14 and its scale are graduated as shown. If the result of a calculation falls between the lines 11 and 12, the correspondingly-marked column on the slide 14 is used, while at other times the normal column is used. The figures on the left-hand half of the slide-rule are marked so as to show that their values are one-tenth of those marked on the right-hand half.

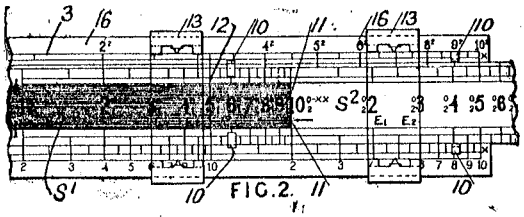

FIG. 2.

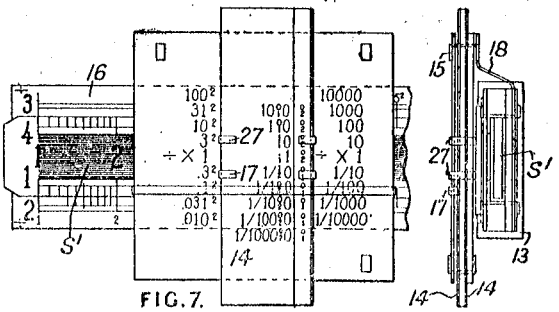

FIG. 7. FIG. 8

Smith R C 17499/1904 Slide rule for decimal point

17,499. Smith, R. C. Sept. 12, A.D. 1903, [*date applied for under Patents Act, A.D. 1901*].

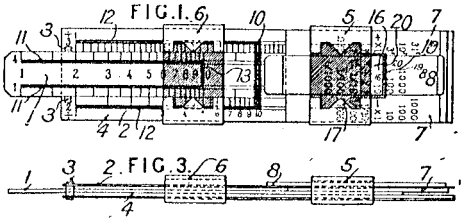

Slide rules.—A logarithmic slide rule has a small rule attached for determining decimal places of results. The main slide 1 moves on the stock 4 below a flexible transparent covering-plate 2 kept in place by the rivets 3, an ordinary cursor 6 being provided. At the right end of the rule is a complete small rule consisting of fixed scales 7, a movable scale 8, and a cursor 5 having three reading-edges ; the movable scale and one limb of the fixed scale are divided uniformly according to the powers of 10, while the other limb is divided according to the nearest corresponding square numbers to agree with the upper fixed limb of the main stock, which is a scale of square roots. With this auxiliary slide rule, the operations of the main rule are imitated, the numbers set and read off being in each case the highest power of 10 which will give a quotient not less than unity when divided into the corresponding main scale quantity. In setting on the auxiliary rule, the figures on the left and right halves of the main rule are thus distinguished. The figures on the left half are framed off by a red band 12, 10 on the fixed scales and a similar band 11, 13 on the slide. The right half is in white as usual. The cursor 5 is coloured red between the reading-edge 17 and the opening 16, and the colours of the factors in any calculation determine on which edge of the cursor 5 readings are to be taken.

Smith R C 7731/1909 Slide rule, cursor for decimal point

7731. Smith, R. C. March 31.

FIG.2.

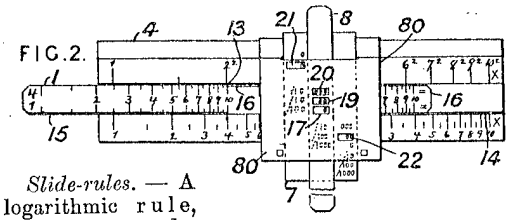

FIG.5.

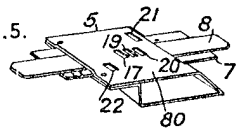

Slide-rules. — A logarithmic rule, of the type described in Specifications 7579/00 and 17,499/04, is provided with an auxiliary slide-rule to be used in conjunction with directive lines on the slide and stock, for mechanically determining the order of tens in the result of a calculation. The slide 1 and stock 4 are provided with the necessary scales, and have directive lines 15, 16 and 13, 14 respectively for indicating at which opening in the cursor 5 the proper number of ciphers will appear. The cursor 5 is arranged transversely on the main slide-rule, and comprises a stock 7 and a slide 8 of non-transparent material, and a cover 80 of celluloid. The upper portion of the cover 80 is provided with three index openings 17, 19, 20 coinciding with the equal spacing of the ciphers on the slide 8, and has two other index openings 21, 22 in line with the figures on the main scale the ciphers of which are to be indicated. The stock 7 and slide 8 have three rows of figures for the ciphers of the figures set on the corresponding scales on the rule. This arrangement gives the number of ciphers mechanically, by the following rule of operation : Repeat every move of the cursor 5 and slide 1 with that of the cursor and slide 8, using the numbers on the main scale and the ciphers of their first figures on the auxiliary scale. Read all decimals in line with the middle index of the cursor 5 except for figures that have the two lines 15, 16 or 13, 14 pointing to the upper or lower openings, the ciphers being read in these openings respectively.

Smith R H 17357/1999 Helical slide rule

17,357. Smith, R. H. Aug. 28.

FIG.1.

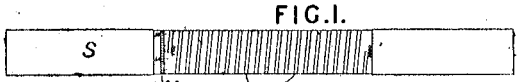

FIG.2.

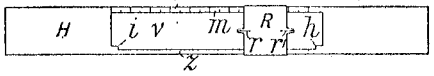

Slide-rules.—A logarithmic scale x is marked spirally round a cylinder S, on a slightly-recessed portion, at the end of which is a circular scale y divided into 50 equal parts. Over this slides and turns a slotted holder H, the two slots v being wider than the intermediate bars z, so that the readings never need be concealed. At the corners of one slot, one bar carries four index horns h, i, while the other bar has a straight scale m divided into twenty equal parts. On the holder H an index ring R can slide, and readings are taken from the pointers r, r^1. The zeros of the scales are displaced according to the circumferential and longitudinal dimensions of the horns, the distance between which is equal to that between the marks 100 and 1000 on the spiral scale. The parts are made of the same material, preferably metal, so as to be equally affected by changes of temperature.

Snell & Bathurst 3679/1888 Tab calc

3679. Snell, C. S., and **Bathurst, F.** March 9.

Ready-reckoners combined with other articles. Consists in mounting ready-reckoning tables in the form of rollers, endless bands passing over rollers, or flaps (which may be hinged or pulled out like a drawer), upon various articles such as paper racks, money drawers and tills, spring balances, shop counters, &c., where they will be

27

handy for use. Fig. 11 shows drawer-like flaps B carrying the tables mounted over a pen tray with

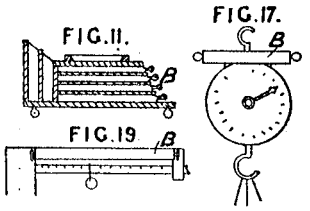

paper rack behind; and Fig. 17 the tables on a roller B mounted on a spring balance.

Soennecken F 10495/1889 Add, subtract

10,495. Soennecken, F. June 28.

FIG. 1.

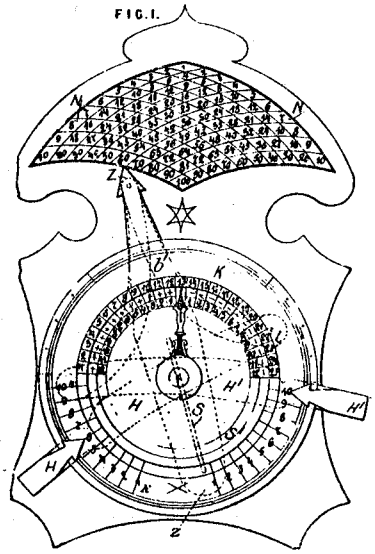

Calculating - apparatus.—Addition and subtraction are performed by means of fixed and rotary circles of numbers K and S^1 with a pointer. In multiplication, two radial index levers H, H^1 point to the factors K and a sliding rotary pointer Z, connected by links b^1 to the levers, shows the product N. Division is performed with the same apparatus.

Soncini G 18367/1908 Multiply Napier's bones

18,367. Soncini, G. Sept. 1.

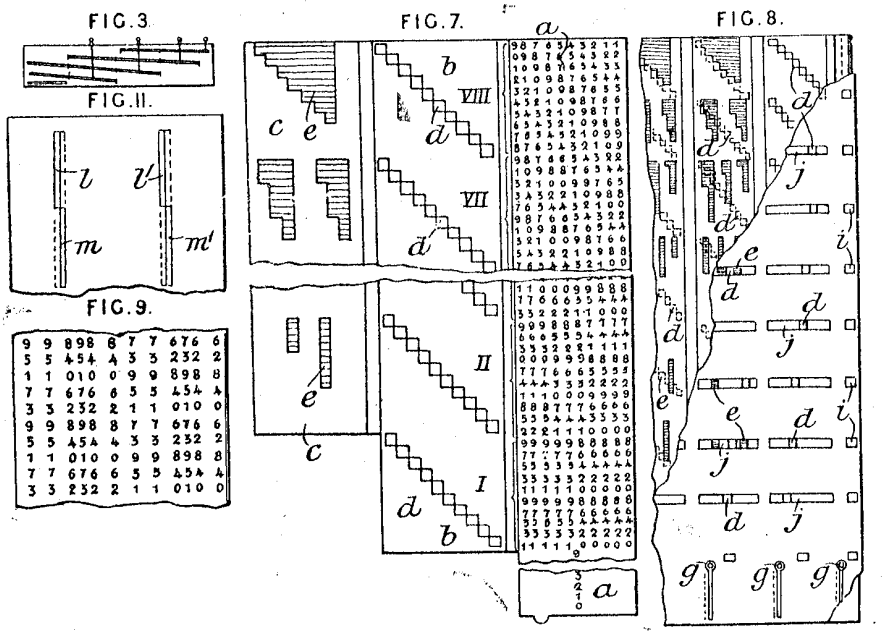

Calculating-apparatus.—A multiplying-machine consists of a number of sliding members mounted between plates, of which one is perforated so as to exhibit the products and setting-digits. Each sliding member consists of three parts. The first part *a*, Fig. 7, has digits set out in zones I . . . VIII to represent the product of the setting-digits, which are in single column at the bottom of the strip, by the multiplier inscribed under the corresponding aperture *i* in the cover for the unit figure of the product. A setting-pin *g* attached to the slide works in a slot in the cover. The middle

84

portion *b* of the slide has apertures *d* in echelon, to display the digit on the next slide to the left which it overlaps, while the third and transparent strip *c* of the slide carries coloured patches *e* to indicate that the number shown is to be increased by a unit in reading off the product. The outer casing has slots *j* in rows, one for each zone. The extreme slides to the left lack the second and third strips as required, the right-hand slide has a single column of digits, and the whole is assembled as shown in Fig. 3. Instead of coloured screens, double apertures may be employed in the third part of the slide as shown at *l*, *m*, *l*¹, *m*¹, Fig. 11, so as to exhibit the augmented or lower digit as required, both being printed on the slide as shown in Fig. 9.

Soncini G 17041/1909 Multiply partial products

17,041. Soncini, G. July 21.

FIG. 3.

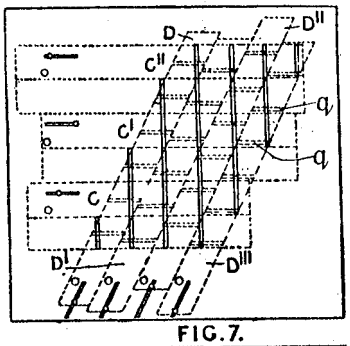

FIG. 7.

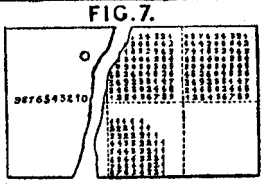

Multiplying - apparatus.—Consists in means for displaying the partial products, in a multiplying-apparatus, so as to make the addition along vertical lines. Between a solid back plate and a slotted front plate are arranged slides C, C^{I}, C^{II} having the Pythagorean products set out as shown in Fig. 7, the unit figures in a series of upper squares and the tens in a lower series displaced to the left. These slides are set transversely for the multiplier, and four oblique slides D, D^{I}, D^{II}, D^{III} having transparent bands *q* are set obliquely for the multiplicand. The slots in the cover are vertical, the numbers to be added appearing at the intersection of these and the transparent bands in the oblique strips.

58

Sonnet & Boissier 661/1879 Adder

661. Sonnet, E. E., and **Boissier, P.** Feb. 19.

[*Provisional protection only.*]

Calculating-apparatus.—Two or more dials are employed, upon one of which the number named appears and upon another the total with the added number. The dials are rotated by several rows of levers (a row for each figure of the total) arranged in the shape of a fan and marked from 1 to 9. Each lever can be turned separately. For adding a number, the lever so marked is moved in proportion to the number, this movement imparting motion to toothed wheels connected with another series of dials. When the lever is turned back the addition dials retain their position, while the indicating-dials are turned again to zero by a spiral spring. In place of several levers for each row a single lever or sector may be used, which is moved through a distance proportional to the number to be added.

Sonnet & Boissier 3339/1879 Adder

3339. Haddan, H. J., [*Sonnet, E. E.,* and *Boissier, P.*]. Aug. 19.

[*Provisional protection only.*]

Calculating-apparatus.—Two or more dials are employed, on one of which the number named appears and upon another the total with the added number. The dials are turned by several rows of levers (a row for each figure of the total) arranged in the shape of a fan and marked from 1 to 9. Each lever can be turned separately. For adding a number, the lever so marked is moved in proportion to the number, this movement imparting motion to toothed wheels connected with another series of dials. When the lever is turned back the addition dials retain their position, while the indicating-dials are turned again to zero by a spiral spring. In place of several levers for each row a single lever or sector may be used, which is moved in proportion to the number to be added. This apparatus may be adapted to other than the pure decimal system, in which case the dial would be numbered accordingly.

26,296. Spitz, L. Nov. 20.

Calculating-apparatus.—Multiplying-machines of the Thomas type are modified to sum the products of a number of separate multiplications by the addition of a second totalizing-counter placed upon a second laterally-movable and hinged

40(

Sperry Gyroscope Co 11665/1915 Spiral slide rule

11,665. Gillmor, R. E., [*Sperry Gyroscope Co.*]. Aug. 12.

Slide-rules.—A mechanical computing-device is provided in conjunction with an indicator in a long home base range-finder. The indicator is provided with dials which show the value of $A-B$ and $\frac{A+B}{2}$, and the range is computed by the equation $R_0=\frac{d}{A-B}\sin\frac{A+B}{2}$ which is proved in the Specification, R_0 being an approximation to the true range, d the length of the base, and A and B the angles made by the lines of sight with the base. The computing-device comprises a fixed annular logarithmic scale of ranges 40, in which the graduations are arranged in spiral form, and an annulus 41 rotatable by a handle 46, or mechanically from the dial 20 which shows, in conjunction with a dial 12, the value of $\frac{A+B}{2}$. The annulus 41 carries a scale 42 graduated according to log $\sin\frac{A+B}{2}$, and a scale 43 graduated according to log $A-B$ which, as shown, is arranged in spiral form. An index 53 reads on the scales 40, 43 and is rotatable by a handle 55.

FIG. 1.

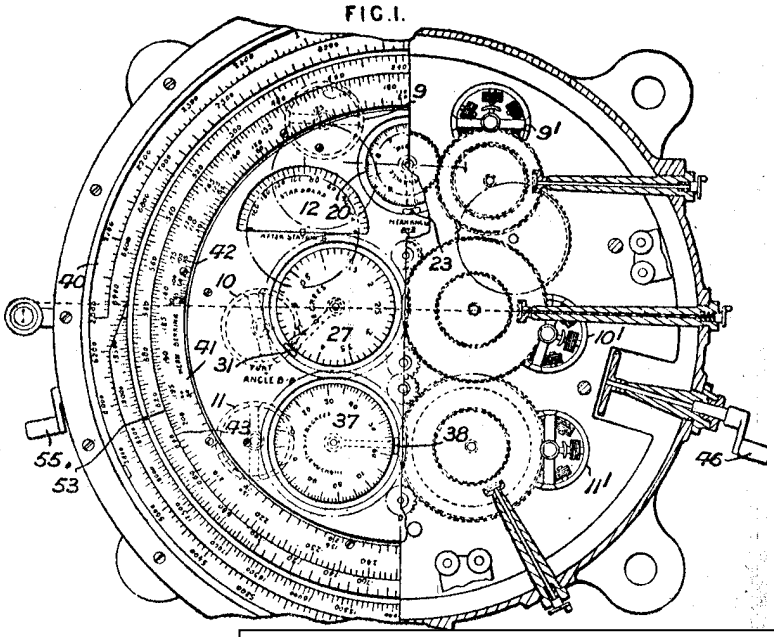

Sperry E A 22359/1904 SR Watch type

22,359. Sperry, E. A. Oct. 17.

Calculating-apparatus. — An apparatus to replace a slide-rule is shaped like a keyless watch and has two dials 1, 2, carrying logarithmic scales. Each dial has a concave mirror 8 at its centre, and is mounted on a disc 3, the edge of which forms a crown wheel. A hand 9 moves over each dial, and is mounted on a smaller disc 19, the edge of which forms a second crown wheel. The dial-discs 3 and hand-discs 19 are mounted on opposite sides of a fixed disc 14 which is cut away at the top to allow the dial-disc 3 to gear with one of a train of wheels driven by a central spindle 29. This spindle is in two parts, one of which can slide within the other, 38, for a short distance and carries a clutch member 30. This clutch member may connect its spindle 29 either with the trains which actuate the dials, or with the other part of the spindle 38. This last part actuates trains which drive the hand-discs. The scale on one dial is carried round several concentric circles, and that on the other dial round one circle only, and the driving-trains are constructed so that the ratio of the angular velocities of either the dials or the hands equals the ratio of the angular lengths of their scales. The unicircular scale may have a second multicircular scale concentrically arranged. The clutch member 30 on the driving-spindle 29 is kept is position by a spring 35 which presses in one of two grooves 33, 34, and the driving-trains are steadied by springs 70 or other corresponding device. A fixed pointer 10 projects over each dial, which is covered by a rotatable glass 57 having a radial scratch on it. The covering-glass 57 also has a small lens 61 fixed in it.

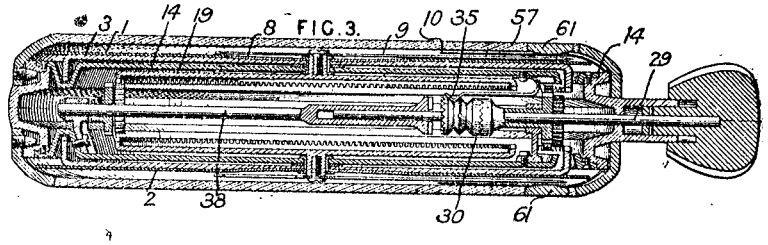

FIG.3.

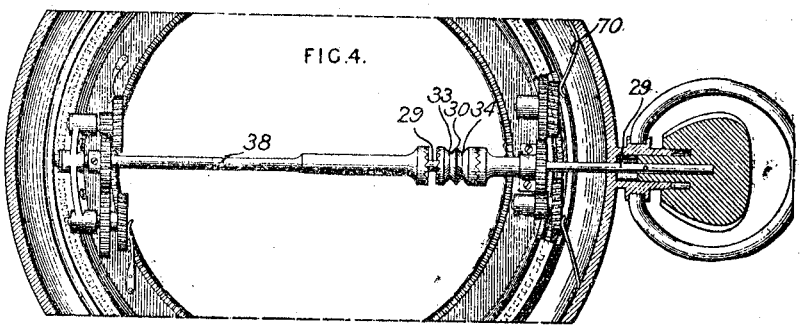

FIG.4.

See article by Bob Otnes in JOS V6.2 Fall 1997

SPITZ L 26926/1906 Summing multiplier

Spicknall M O 2857/1915 slide rule/pencil

2857. Spicknall, M. O. Feb. 22.

Slide-rules of circular, oval, or square cross-section are combined with a fountain pen and preferably a pencil. A slide 1 fits round a hollow barrel 2 in which is fixed a pencil 4 and a pen 5 having a cap 6, the whole being embraced by a cursor 3. In an alternative form, the slide 1 is transparent and encircles the slide, which can be coupled to or uncoupled from the ordinary slide. Behind the ordinary slide 16, which is provided with an indicating set of wheels for the second multiplier, is the additional slide 15, each counter wheel of which receives motion from the third wheel 25 of a bevel clutch driven by the sleeve 5 having a ratchet connexion with the internal shaft 2, which turns with the adjustable pinion 29 and passes continuously under both slides ; simple engaging parts 23, 24 allow for transmission of the motion. Reversal is effected by the transverse bars 13, which engage all the movable clutch parts and are operated through link-work by the reversing-handle. Both slides are hinged to the transverse bolts 17, and may be coupled by link-work provided with a handle which also serves to raise one or both slides about their hinges ; the link 50, Fig. 5, bearing the handle is pivoted at 58 to the ordinary slide, and has a spring hook 51 at its other end adapted to engage a pin 53 upon the additional slide, whenever the link is turned down into the position shown and the hook lifted against its controlling-spring by means of the thumb-piece 54. A projecting lug 61 on the handle engages a slot in the slide to keep the link rigid ; provision is made for turning the link and associated parts through a right-angle and engaging them with a special pin and slot upon the ordinary slide, in which position the additional slide is uncoupled. In order that transfers may occur independently in the two totalizing-counters, each numeral wheel, together with its transfer pinion, detent-wheel, and sleeve 5, is driven from the shaft 2 through a ratchet-clutch. The small multiplier setting-slides 31 are provided with the usual pointers working over fixed scales, but have in addition endless metal numeral-bearing bands, whereby the multiplier set can be read through alined windows across the machine ; there are also friction balls 32 and detents in the form of rollers 34 carried by spring plates and engaging with notched plates 35.

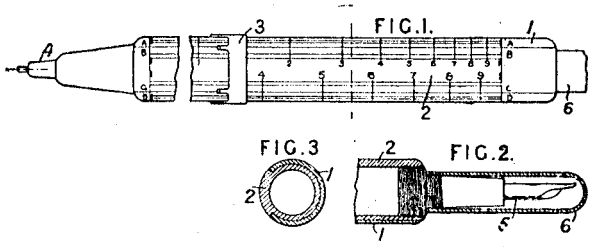

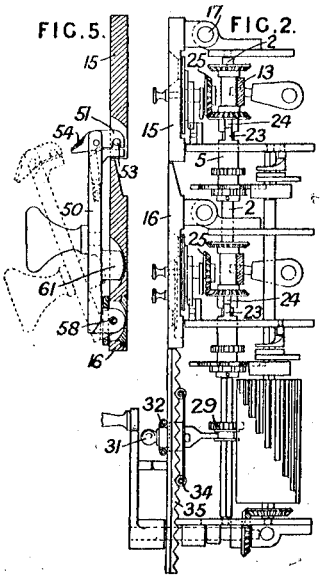

Spicknall M O 17440/1915 Hollow slide rule

17,440. Spicknall, M. O. Dec. 13.

Slide-rules, of a cylindrical form and circular, oval, or square in cross-section, are made hollow to contain a pair of folding compasses. The barrel 2, into which the compasses 5 are screwed, is partly surrounded by a slide 1, the scales being marked on the adjacent edges of the barrel and slide. A pencil 4 may be fitted in the opposite end, and the slide may be formed with an external longitudinal rib and corresponding internal depression. In an alternative form, the slide completely surrounds the barrel and is transparent.

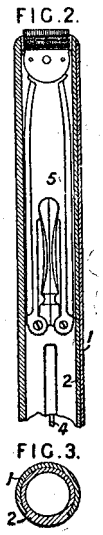

671

© B O B Williams Printed22/11/2023 CalcPatents E

Spitz & Co 5283/1911 Direct multiplier

5283. Spitz & Co., L., and **Rein, R.** March 2.

Multiplying and dividing apparatus.—A machine in which the product of two digits is obtained directly, and not by successive additions, is provided with levers having, each, a number of fulcra any one of which is adapted to be temporarily fixed according to the particular key depressed in the corresponding bank, so that the movement of the end of the lever may be proportional to the product of the numeral of the key depressed and the numeral corresponding to the amount of rotation imparted to the multiplying-lever. Each key-lever 1, arranged below the keys 15 of its bank, is

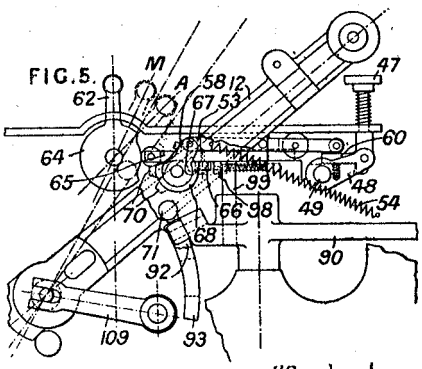

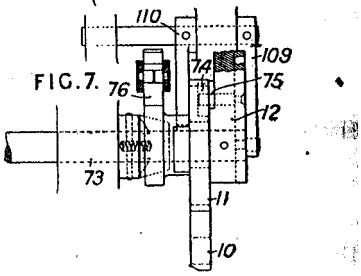

forked at its rear end to engage a pin on a rack 5, and at its front end is pivoted to a rack 9 actuated through gearing 10, 11 from the multiplying-lever 12. Each key-lever is provided with a sliding block 14 which is movable in a slot 13 and carries the fulcra I–IX. The depression of a key, through a projection 22, Fig. 2[a], on the key-stem 21, forces a pin 18 into an aperture 20 on the sliding block, thereby fixing the fulcrum corresponding to the key depressed. The pins 18 are slidably arranged in a bar 10, Fig. 2[a], and are normally prevented from engaging the apertures 20 by means of springs. The racks 5 transmit their movements to the totalizing-counter 28 by means of gearing 24, 25, 26 or 29, 30, when the machine is performing respectively, multiplication and addition, or subtraction and division. A second counter or printing-mechanism 31 is also adapted to be brought into engagement with the pinion 30.

Keyboards; keyboard interlocks.—The keys 15 are locked in their depressed positions by means of pins 34 on a bar 36, Fig. 2, engaging a lug on the key stems. The bar 36 is kept locked until the multiplying-lever returns to its normal or zero position so that a key can only be depressed in this position of the lever. For this purpose, a locking rod 41 is provided, which is moved vertically by means of a rod 44 engaging a cam-slot 46 in the pinion 10. In the normal position, the rod 41 is opposite a notch 43 in the bar 36, but in the lower position, the rod 41 lies in front of the end 42 of the bar 36 and

More text and drawings omitted.

© B O B Williams Printed22/11/2023 CalcPatents Ed. 1.doc

Spitz L 4925/1907 Reverse for Thomas type

4925. Spitz, L. Feb. 28.

FIG. 1.

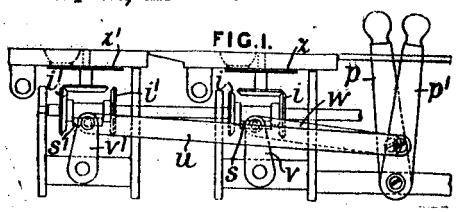

Calculating-apparatus.—In a calculating-machine of the Thomas type, independently-operated reversing-gear is provided for each of the two product counters; in a modification, the reversing-levers may be simultaneously operated. The reversing-rods *s*, *s*¹, Fig. 1, fitted between the hubs of the axially-movable pairs of gear-wheels *i*, *i*¹ which operate the product-counters *x*, *x*¹, are coupled either directly, or through their levers *v*, *v*¹, with connecting-rods *w*, *u*, respectively, attached in turn to the operating-levers *p*, *p*¹. In the modification, the reversing-rod *s*, Figs. 3 and 4, is connected as before with the lever *p*, but the connecting-rod *u* is attached by means of a pin *f* to one end of the lever *m m*¹, which rotates about a pin *j* fixed to the lever *p*¹. The other end of the lever *m m*¹ is provided with a forked end in which engages the pin *n* fastened to the lever *p*. The upper part of the lever *p*¹ is formed from a spring, the end *r* of which can be made to engage behind the projection *q* of the lever *p*, in which case the two levers can be operated as one. When the lever *p*¹ is freed from the lever *p*, by its end *r* being pushed from behind the projection *q* and held in a central notch of the slot *o*, the operation of the lever *p* in either direction is accompanied by the simultaneous reversal of the product-counters in opposite directions owing to the movement of the lever *m m*¹.

FIG. 3.

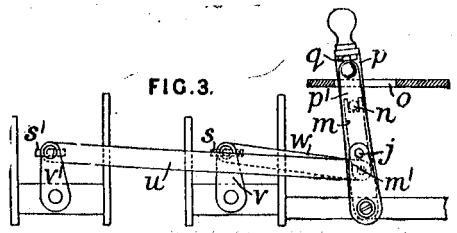

FIG. 4.

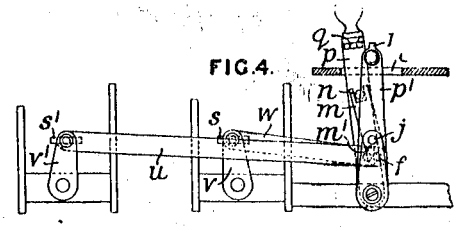

Spitz & Rein 5283/1911 Direct multiplier

5283. Spitz & Co., L., and **Rein, R.** March 2.

Multiplying and dividing apparatus.—A machine in which the product of two digits is obtained directly, and not by successive additions, is provided with levers having, each, a number of fulcra any one of which is adapted to be temporarily fixed according to the particular key depressed in the corresponding bank, so that the movement of the end of the lever

may be proportional to the product o numeral of the key depressed and the nu corresponding to the amount of rotatio parted to the multiplying-lever. Each key 1, arranged below the keys 15 of its ba

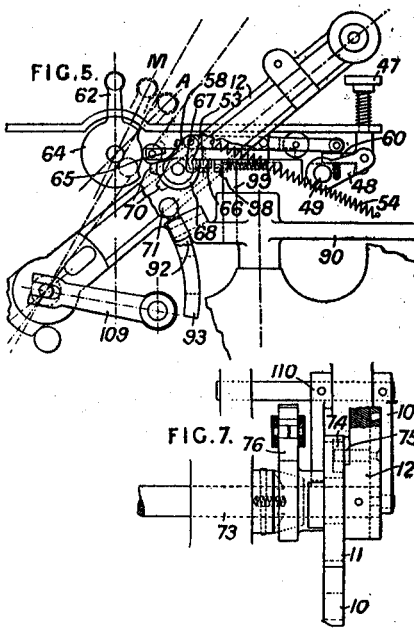

forked at its rear end to engage a pin on a 5, and at its front end is pivoted to a 9 actuated through gearing 10, 11 fro multiplying-lever 12. Each key-lever is vided with a sliding block 14 which is m in a slot 13 and carries the fulcra I–IX. depression of a key, through a projectio Fig. 2a, on the key-stem 21, forces a p into an aperture 20 on the sliding block, th fixing the fulcrum corresponding to th depressed. The pins 18 are slidably arran a bar 10, Fig. 2a, and are normally prev from engaging the apertures 20 by mea springs. The racks 5 transmit their move to the totalizing-counter 28 by means of ge 24, 25, 26 or 29, 30, when the machi performing respectively, multiplication addition, or subtraction and division. A s counter or printing - mechanism 31 is adapted to be brought into engagement wit pinion 30.

Keyboards; keyboard interlocks.—The ke are locked in their depressed positions by n of pins 34 on a bar 36, Fig. 2, engaging on the key stems. The bar 36 is kept l until the multiplying-lever returns to its n or zero position so that a key can onl depressed in this position of the lever. Fo purpose, a locking rod 41 is provided, whi moved vertically by means of a rod 44 eng a cam-slot 46 in the pinion 10. In the n position, the rod 41 is opposite a notch the bar 36, but in the lower position, the r lies in front of the end 42 of the bar 36

8

Spurgeon J 12823/1915 Multiply by partial products

12,823. Spurgeon, J. Sept. 7.

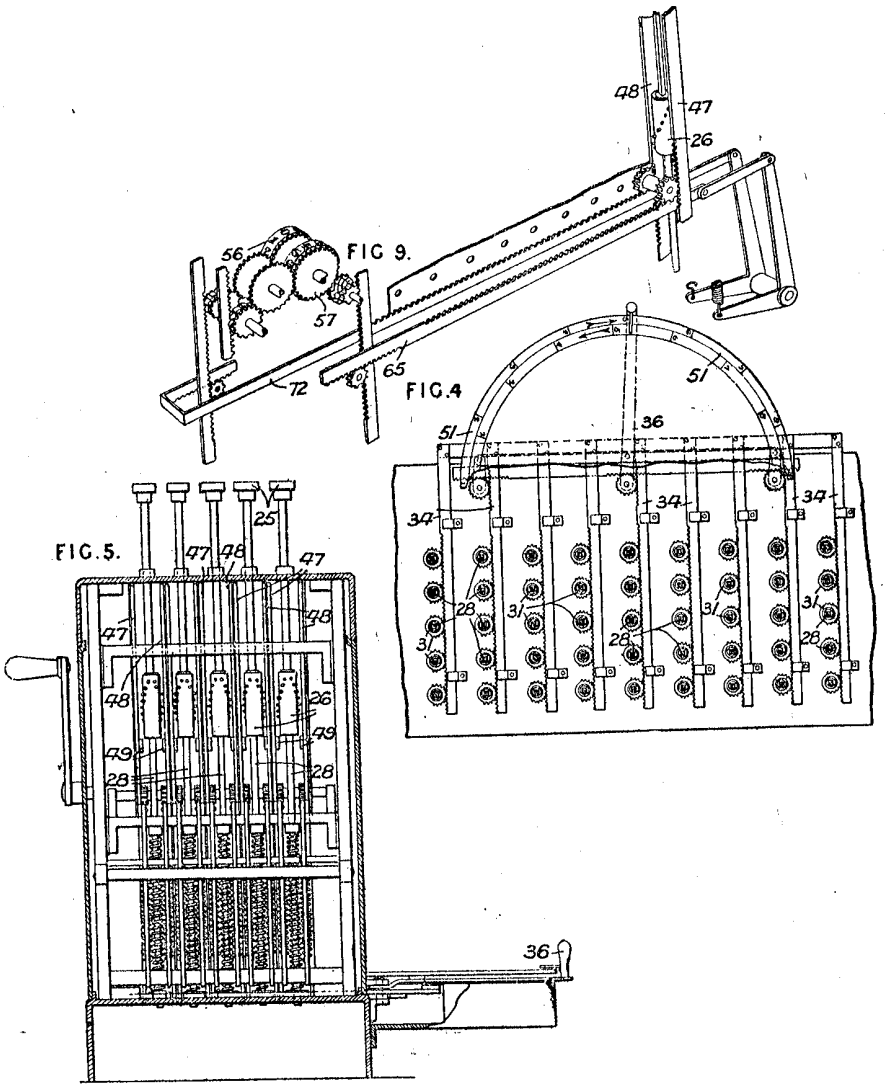

Multiplying-apparatus.—In a machine employing representations of partial products, the key stems are square and carry cylinders with projecting pins arranged in accordance with the partial products, the cylinders being given a part rotation to bring the requisite multiplier into operation. In one modification, a hollow barrel has notches cut in it in place of pins, and in a further modification, the key stem carries a cross-bar which is selectively rotated to engage notched segment plates carried by the differential racks. The key stems 28 carry pinions 31 engaged by racks 34, which are moved simultaneously through rack-and-pinion gearing from a handle 36 moving over an arcuate scale 51, the graduations on which for forward and return movement are staggered to allow for back-lash. On depression of the keys 25, Fig. 5, which do not rotate with the cylinders 26, the selected projecting pins on each side of the cylinder, one for units and one for tens, engage projections 49 upon differential racks 47, 48, which, through racks 65, 72, Fig. 9, transmit the differential movement to the totalizer-wheels 56, 57 through ratchet clutches adapted to operate one denomination on the downward stroke of the key and the other on the upward stroke, which is effected by springs, thus facilitating transfer.

Stamper J 124119 of 1919 Tab calc for tax

124,119. Stamper, J. June 10, 1918.

Tabular calculators for determining deductions of income tax on dividends &c. comprises a series of tables, Fig. 1, in book form and having index tabs as shown, on which are arranged, in vertical groups, the gross amount, the tax, and the nett amount of each value from £1 to £100, £101 to £200, &c. In conjunction with these tables is used a stick of polygonal section, on the sides of which are arranged series of figures, Fig. 2, in similar form to the main tables, for the fractional parts of a £. By placing the figures for the desired fractional part in juxtaposition to those for the £'s on the tables, the required deduction and nett amount can be obtained by addition. In lieu of a rigid stick, a number of cardboard strips connected together flexibly may be employed.

FIG. 1.

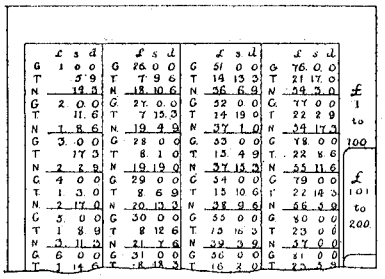

FIG. 2.

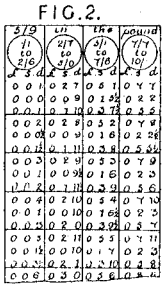

Stanley J W 646/1886 Adder

646. Stanley, J. W. Jan. 15. *Drawings to Specification.*

Calculating-apparatus.—Consists of an adding-wheel marked with the two hundred and forty consecutive amounts of pence and shillings from a penny to a pound and also of farthings, pence, and shillings from one farthing to five shillings. It is turned beneath a plate having a circular slot marked and numbered round its edge with twenty equal divisions each subdivided into twelve. The complete revolutions of the wheel are added up on a toothed wheel counter. The disc is also marked with numbers from 1 to 100.

See [Blight, 2003 #102]

Stanley & Amsler 13567/1894 Planimeter

13,567. Stanley, W. F., and **Amsler, A.** July 13. *Drawings to Specification.*

***Calculating** apparatus.*—Relates to a planimeter for measuring the area of shrunk or stretched plans. If a square whose side is a shrinks so that the sides become $a-p$ and $a-q$ where p and q are small the new area is approximately $a^2\left\{1-\frac{p+q}{a}\right\}$. But on the ordinary planimeter $a^2=ry$ where r is the length of the tracer arm and y the reading on the roller. Thus with the shrunk plan the area would appear to be $ry\left\{1-\frac{p+q}{a}\right\}$. The invention consists in providing the instrument with extra scales on the arm and reading verniers so that the arm can be set to the value $r\left\{1-\frac{p+q}{a}\right\}$, thereby obtaining from the measurement of the shrunk area the proper reading y on the roller.

Steiger A W 3842/1900 Calc calendar

3842. Evans, W. E., [*Steiger, A. W.*]. Feb. 27.

Calendars; calculating-apparatus.—The calendar or date calculator is built up of four discs or cylinders. The disc *a* is divided radially in 35 parts, marked 1–31 and leaving four blanks; the next ring *h* is marked with the

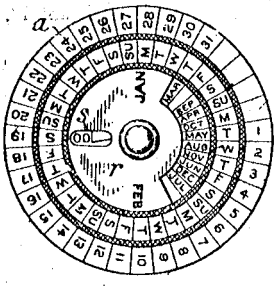

FIG. 1.

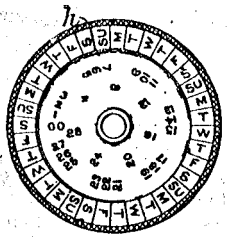

FIG. 4.

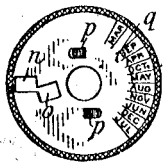

FIG. 5.

days of the week repeated five times and with years 00–28 (or other consecutive years), the leap years being placed in a circle nearer the centre and a blank space left after each. Then follows the disc *q* with the months, except Jan. and Feb., marked as indicated and with a peculiarly-shaped slot *n*, *o*; the tongues *p* are to cause friction and prevent accidental displacement. On the top of the disc *q* is a plate *r* with a radial slot *s* and a cut-way portion to expose the months; it is marked, as shown, with the months Jan. and Feb. For any ordinary year, if that year shows through the slots *s*, *n* the name of each month will be opposite the first weekday of that month, and by bringing the number 1 on the disc *a* opposite any one of the similar days on the disc *h* the calendar for the month will be set up. For leap years, the

Steiger O 20968/1893 ASMD, not the millionaire

20,968. Thompson, W. P., [*Steiger, O.*]. Nov. 4.

Calculating - apparatus.— The apparatus, which is for addition, subtraction, multiplication, and division, assumes several modified forms, and the various movements necessary are given by a complex system of cams, gearing, &c. The following description of the machine when used for multiplication gives, however, a general idea of the main features. A series of pairs of discs *a*, *b* are employed to govern the movements of the multiplying-mechanism. The pair shown in Fig. 1 is for multiplication

FIG. 1.

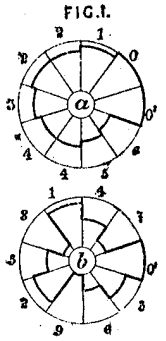

by seven, the cams on their faces acting as stops for travelling racks, 1 to 9, but there is another pair of discs for each of the other digits. It will be seen that the numbers against the various sectors on the "tens" disc *a*, read in conjunction with the same on the "units" disc *b*, and which numbers correspond to the depth of the steps in the cam, give all the products of 7 by 0, 1, 2, 3, . . . 9. A series of pinions are mounted to slide upon, but turn with, a set of spindles placed over the racks. If, for example, it be required to multiply 514 by 7, the first three pinions are brought respectively over the racks 5, 1, 4, and the key 7 of a series of keys 1, 2 . . . 9, 0 is pressed. A handle is then turned which sets all the discs *a*, *b* into position to stop the racks as is required for the multiplication by 7. The racks, which are also moved by the handle, first encounter the "tens" discs *a*, and the corresponding pinions

78

are rotated respectively through the number of units required for the multiplication for the "tens," viz.: 3, 0, 2; a lateral displacement then takes place bringing the racks in front of the "units" discs *a*, and when they are stopped by the cams they have turned their pinions through 5, 7, 8. During the movements of the spindles which are effective for the multiplications, they are coupled up with a recording-mechanism consisting of a counter. Between the multiplication for the "tens" and of that for the "units," however, the counter uncouples, moves, and couples again in a different position, so as to add the two results in the required manner, viz.:—

302
578
———
3598

A checking-mechanism is also actuated which shows the multiplier after the operation is completed, so that any error made by the operator can be detected. The apparatus can be used for multiplying by numbers consisting of more than one digit, the operation being repeated for each. The counter which is used to register the results is of special character, the carrying, zeroizing, &c., mechanisms being so arranged as not to interfere with the action of the machine.

Stelfox S H 13852/1910 Folded sliderule

13,852. Stelfox, S. H. June 8.

Slide-rules. — In order to render slide-rules more portable, the stock or slide or both are hinged or formed in two parts so as to be folded when not in use. Dowels may be employed to connect the two parts as shown in Fig. I, or the stock may be only of half length as shown in Fig. II. with the continuation of the scale repeated as shown, and the slide also in two parts butting together simply, or attached by spring pieces engaging shoulders as shown in Figs. III. and IV. The invention is shown applied to "Mannheim rule" in which the scale on half of the slide is shown twice on the ot half, the fixed scales corresponding.

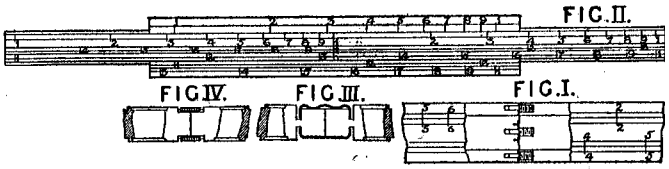

Stewart C E 22240/1895 Tab calc wages

22,240. Stewart, C. E. Nov. 21.

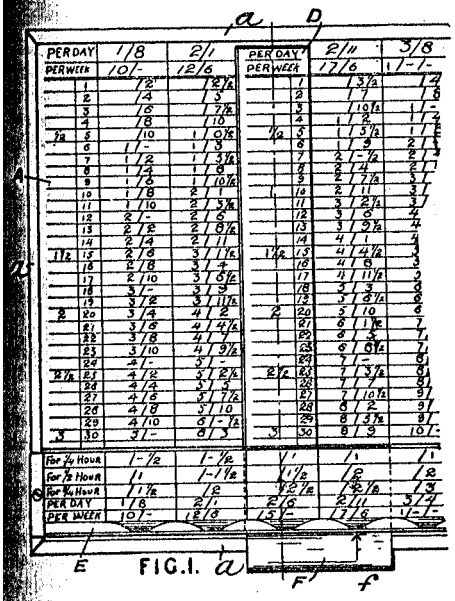

Computing-scales.—Relates to tables for finding rates, such, for example, as workmen's wages for certain periods when the rate per day or per week is known. For this purpose a board A with end flanges *a*, *a* is employed, graduated on both sides so as to obtain more space. This is marked in columns of rates as indicated, and a bar D marked similarly to the first column can slide over it, plates F curling round the bottom flanges and fixed plates E acting as guides. A pointer *f* indicates the particular rate determined and the amount for any periods is read off opposite that period marked on D.

Drawing from full patent: Stewart

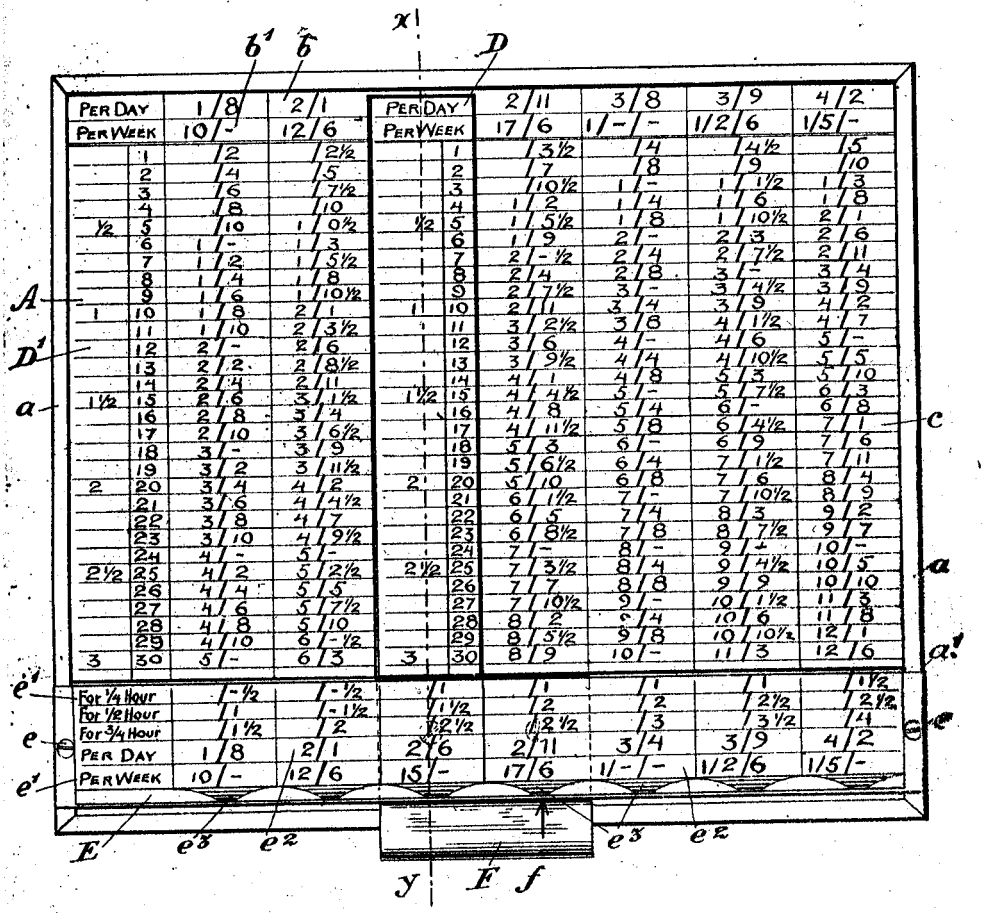

Fig.1.

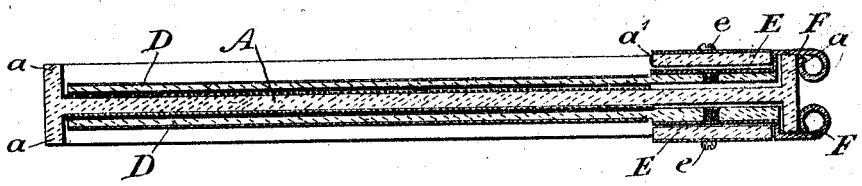

Fig.2.

St Louis Computing Co 23826/1903 AM Print

23,826. Justice, P. M., [*St. Louis Computing Co.*]. Nov. 3.

Calculating-apparatus.—Adding machines with mechanism for indicating and printing the items set and the total when required, also for clearing the totalizing-apparatus at will, and provided with a repeating device for multiplication, are described. Fig. 3 is a longitudinal sectional view, Fig. 7 a side elevation of the rear portion of the machine as seen in Fig. 3, Fig. 8 a similar view showing the opposite side of the machine, and Fig. 9 part of a vertical section transversely across the machine through the keyboard. The keys set stops to limit the stroke of control bars driven by the item trains, which set the printing and indicating

FIG. 3.

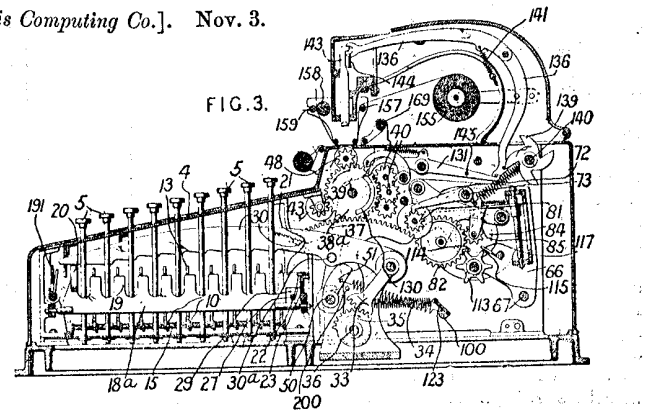

431

STOKES G D C 108172 of 1916 Gunnery rule

Stimpson W F 5013/1900 Computing scale

5013. Weighing-apparatus. STIMPSON, W. F., 419, Second Avenue, Detroit, Michigan, U.S.A. March 16

Value-indicating apparatus.—The beam H, pivoted at J, is connected by a rod M to the platform and by a link K to the lever E, which is pivoted to a support D and which carries a chart or scale F on which can be adjusted a sliding poise G. Computations of value at different prices per lb. are marked on the chart, and corresponding prices per lb. are marked on the sliding poise, which is available up to 10 lbs. The central part of the beam H is formed of two separate bars, as indicated in cross-section in Fig. 4, on which a poise P can ride. The poise carries indicating-fingers b^1, e, which engage with notches on the beam and indicate the corresponding graduations on a scale formed on a covering cap or shelf C and reading up to 40 lbs.

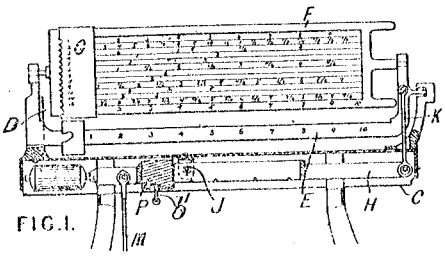

FIG. 1.

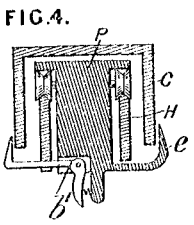

FIG. 4.

Picture Courtesy Avery Historical Museum

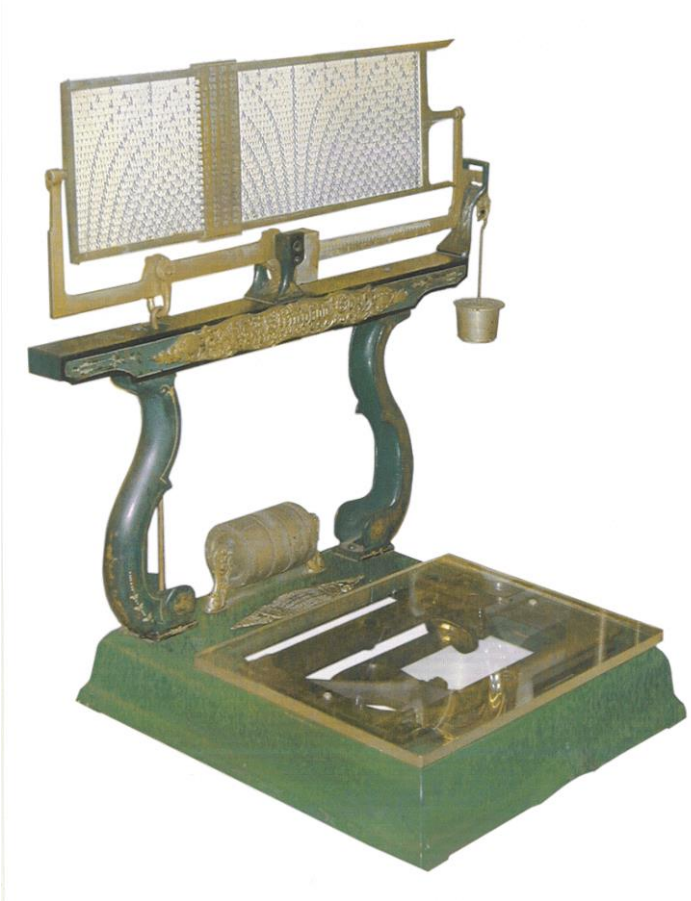

Stokes G D C 108172 of 1916 Slide rule for gunnery

108,172. Stokes, G. D. C. July 17, 1916.

FIG.1.

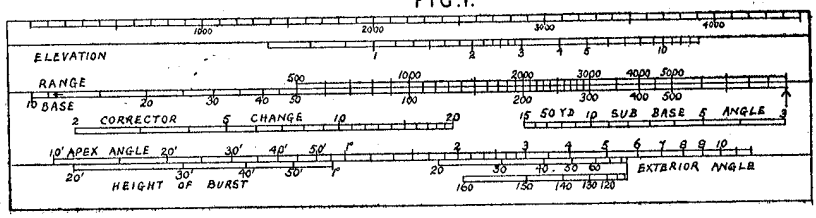



Slide-rules for use in field gunnery are provided with logarithmic scales for calculating range corrections for temperature, headwind, and barometer, and for computing ranges and angles from the formula $\tan C = \frac{c}{b} \times \frac{\text{Sin E}}{1 + \frac{1}{10}\text{Cos E}}$, where E is the exterior angle at the apex A in the triangle A B C, A being the observer's post, B the battery position, and C the target. Formulæ are given for the scales for corrector change and range corrections for wind, barometer &c. The centre of the rule is flexible to improve the movement of the slides, and the top edge of the rule is provided with a map scale.

Stone F G 9333/1890 Device for gunnery

9333. Stone, F. G. June 17.

Calculating-apparatus.—The object is to enable the commander of a group of [forts to ascertain from one observing-station the range and bearing of an object in relation to a group or groups of batteries, search-lights, &c., and hence what guns or lights can be brought to bear on the object. Charts are prepared showing the position and range of the guns. In Fig. 1, which shows a chart with the indicating-apparatus attached, C, C, C represent guns and D the arcs of fire. E represents a central observing-station. An arm F is pivoted at E, and is graduated to show distances &c. A traveller G is arranged to slide on the arm F to the position of the object, and the arm H indicates the range &c. from the batteries. The chart is preferably so arranged that the arm E is transferable.

9333.

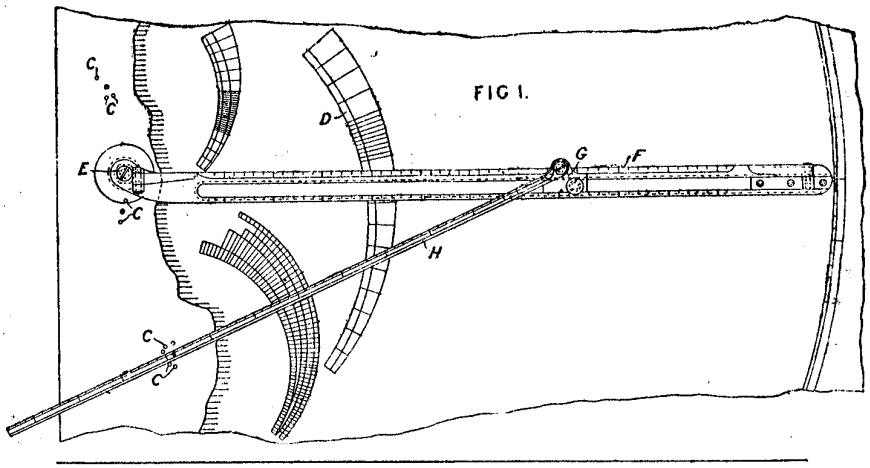

Stone F G 19824/1890 Artillery ranging

19,824. Stone, F. G. Dec. 4.

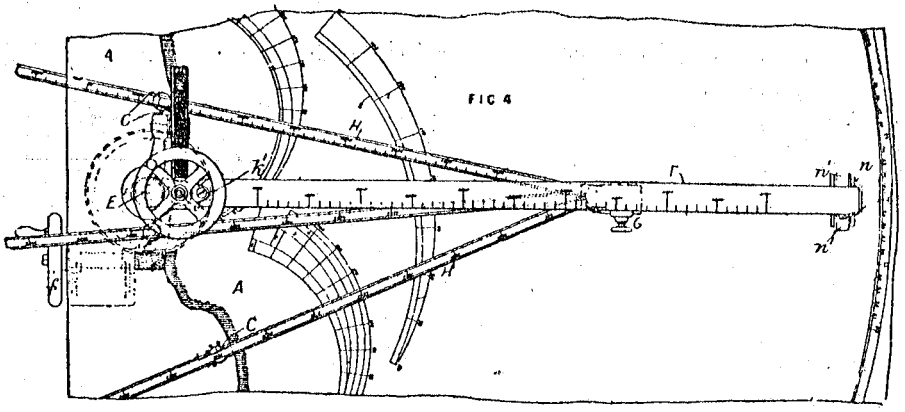

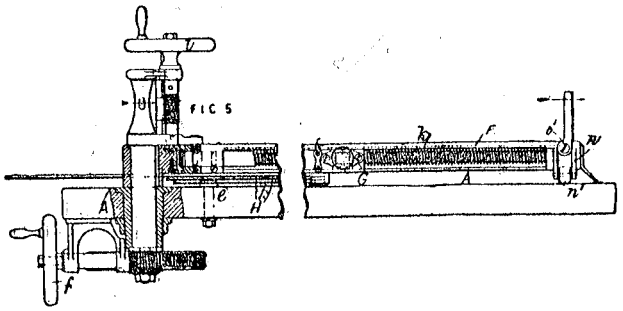

Calculating-apparatus. — Relates to improvements upon the invention described in Specification No. 9333, A.D. 1890, in which means are described by which an observer at a central station is able to ascertain the range and bearing of an object in relation to all the batteries of which the station is the centre, so that ordnance or search lights may be trained upon it. The present invention consists of means by which the range and bearing of the object can be ascertained (at the central station) from all the batteries simultaneously, and by which also the moving object can be accurately followed. Fig. 4 shows a plan of one arrangement, in which A is the chart, showing the central station E and the batteries of guns C. The scale or pointer F is pivoted at E, and can be turned from the rear by the hand-wheel *f* to give the bearing of the object. Within F is a screw *k* carrying the traveller or nut G. This screw is turned by the hand-wheel *i*. Hence by turning the wheels the object can be accurately followed. From the traveller a number of rods or scales H are

Stone F G 15978/1890 Range finder

15,978. Stone, F. G. Oct. 8.

Calculating-apparatus.—Relates to an instrument which in determining the position (range and bearing) of a given object simultaneously sets the objective indicator on the surface of a chart. The indicator is preferably of the class described in Specification No. 9333, A.D. 1890, while the range-finder determines the distance of the object by means of its angular distance from the horizon. F is the indicator arm of the objective indicator, having an index G actuated by the screw *p* travelling over the chart board A^1. The spindle F^1 of the indicator is turned by a worm d^1 and worm-wheel *d* on rotating the hand-wheel *f*, and the range-finding telescope *a*, being mounted on this spindle, moves with it to sight the object. To alter the elevation of the telescope, the hand-wheel *h* is turned, and by means of a worm g^2, worm-wheel *g*,

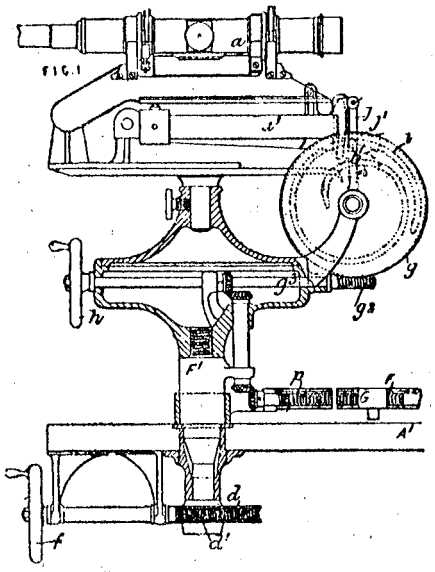

and cam-groove *i*, raises or lowers the elevating-lever a^1; this is effected by a pin j^1 on a link *j* passing through a slotted guide b^1 into the cam-groove *i*. The spindle g^3 carrying the worm g^2 is bevel-geared with the traversing-screw *p* of the index G, and the spiral of the groove *i* is calculated so that equal movements of G are caused by equal change of range. The details of construction of the instruments may be varied.

Stowe L 4474/1879 Adder

4474. Stowe, L. Nov. 3.

Calculating - apparatus. — Consists of several revoluble cylinders, each having its circumference equal to its length and fitted with a handle F. A tooth at one end of each cylinder moves an index wheel one tooth for each revolution. The surfaces of the cylinders are divided into squares, each cylinder containing a different number according to the purpose for which it is intended.

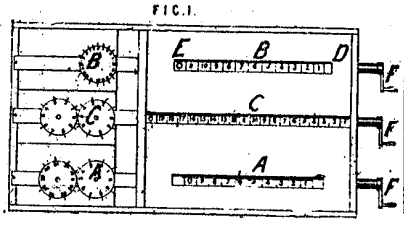

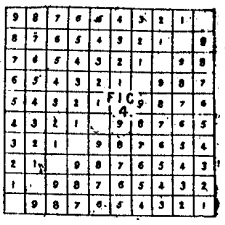

The digits cylinder A has 10 squares in each row, the pence cylinder B 12, and the shillings cylinder C 20. The numbers on the squares are arranged beginning at the left-hand side with zero, and are marked in regular sequence to the top of the column, the zero being placed a square higher for each row, as shown in Fig. 4. The cylinders are mounted so that only one row of figures is visible. In practice each cylinder is placed with zero at the end E of the slot E, D, and then revolved until the numbers to be added successively take the place of zero and the result is shown on the index. This apparatus is applicable to all scales, weights, and measures.

Sutton S H 14891/1886 Small tab calc

14,891. Sutton, S. H. Nov. 17.

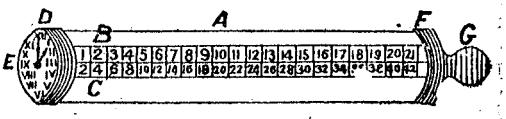

Calculating - apparatus combined with other articles. A hollow cylinder A, slotted at C along its whole length and having a cap D at its end on which is a clock dial E and loose hands for teaching children the time, contains a second cylinder which can be turned round by the knob G passing through a cap F which closes this end of the cylinder. Along the edge of the slot C is marked a series of consecutive numbers B, while the inner cylinder is marked with rows of numbers, one of which rows shows through the slot and gives the products of numbers on the external row by the number on the extreme left of the internal row. Other calculations, such as interest, discount, &c., may be provided for in a similar manner. The hollow cylinders may be used as a case for pencils or pens, or the internal cylinder itself may be a pencil or pen. The outer cylinder can be used as a ruler.

Suxspeach J 676/1753 Slide rule, Chrono and abr

SUXSPEACH. 19th Feb. 1753.

676. A grant unto JOHN SUXSPEACH, of the parish of St Dunstan, Stepney, in the county of Middx, schoolmaster, of his new invented instrument, called the catholick organon or universal sliding foot rule; to hold to him, his execrs, admrs, & assignes, within England, Wales, & town of Berwick-upon-Tweed for the term of 14 years pursuant to the statute; and a clause is inserted to inroll the same within 3 kalendar months from the date hereof. Witness His Matie at Westmr, the 19th day of February, in the year above. By writ, &c.

A.D. 1753, February 19.—N° 676.

SUXSPEACH, JOHN.—An instrument called the "catholic-" organon or universal sliding foot rule," consisting of a stock containing "an octagonal slide or telescope and two thin slides, " each slide containing a brass tongue, that form a quadrant."

The instrument is said to be "of great use in the practice of " arithmetick, geometry, mensuration, gauging, trigonometry, " navigation, dialing, astronomy, and all the branches of the " mathematics."

A stock contains "an octagonal slide, in the inside of which is " a brass drawer containing part of a telescope, so contrived that " when the instrument is in the case, which case is to keep the " same clean, the end of the case having an object glass, the " same forms a compleat telescope," "and the end of the drawer " contains a plumet used in time of observation. On each side " of the instrument is a thin slide, each containing a brass tongue " that form a quadrant, in the use of which no regard is had to " the horizon, but the sun only. At one end of the octagonal " slide is a brass head containing two small slides or slips of " brass; in the midst of each is a piece of dark glass to be used " in taking an observation by the sun."

"The said instrument contains eighty-six lines, exclusive of " those on the quadrant and perpetual almanack." The said lines relate to:—Equal parts, circles, polygons, squares, cubes, the five platonic bodies, versed sines, tangents, sines, chords, surfaces, solid contents, spheres, cones, cylinders, parabolas, ellipses, spheroids, decimal divisions, the sun, the moon, the stars, longitude, "canons in astronomy." mensuration, weights, mechanical powers, algebra, trigonometry, chronological cycles, and the principles of dialling.

[Printed, 4d. No Drawings. See Rolls Chapel Reports, 6th Report, p. 127.]

See article

[Catholic Organon, or Universal Sliding Foot Rule, or the first Slide rule patent.Hopp, 2001 #93]

Swan D L C 10896/1892 Proportional keys

10,896. Swan, D. L. C. June 9.

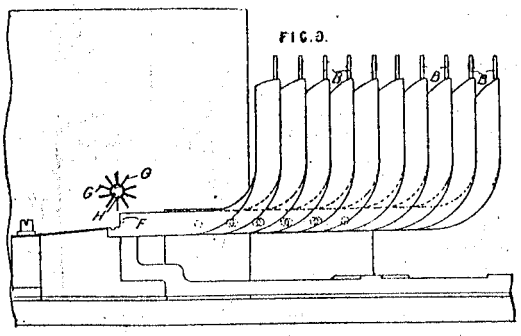

Calculating-apparatus.—The ten key levers B act at arithmetically-proportioned leverages on a frame (not shown) which is pivoted on the right and provided on the left with a toothed segment in gear with a pinion on a shaft H the angular movement of which in one direction actuates a counter through a ratchet connection. Each key lever also operates one of a series of bent levers F which act as stops to pallets G set spirally round the shaft H to determine its correct rotation.

Sykes & Abbott 102/1882 Educational abacus

102. Ezra Sykes and Otho Giles Abbott, of Huddersfield, in the county of York, Educational Apparatus Manufacturers, for an invention of "Improvements in the method of and apparatus for teaching reading and the simple and compound rules of arithmetic and other educational matter." — Dated 7th January, 1882.

Szenhak S 7004/1898 Tab calc, educ multiplier

7004. Szenhak, S. March 22.

Calculating-apparatus.—Relates to a toy for teaching multiplication which may serve also as a pen or pencil case, as a kaleidoscope case, &c. The cylindrical case *a* has the numbers 1 to 10 marked upon its collar a^1; its body below the collar is divided up into a hundred squares upon which the multiplication table is marked. Fitting over the case is a sleeve *b* marked along its upper edge to agree with the collar and having a number of openings *c* arranged along a helical line, so that, when any number on the sleeve is brought under a number on the collar, their product is seen through the opening below. In a modification, the retaining-disc *d* is replaced by a collar on the case, and the numbers are marked on the cover *g* instead of on the collar; the cover is then formed with a feather to fit a groove in the case.

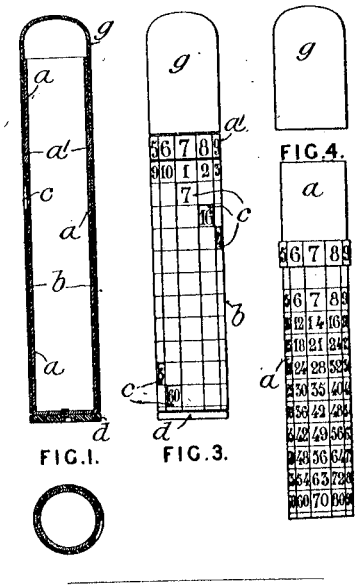

Picture BOBW collection



Tanaka S 8723/1897 9-key adder

8723. Tanaka, S. April 6.

Calculating-apparatus for adding. The keys 1–9 are pivoted upon an axis S, S, S, and bear by points g^1–g^9 upon a flat lever M pivoted on an oblique axis *a*, *b* so that the requisite "play" is given for equal movements of the keys. The movements of the lever are transmitted to a compound pawl-carrying lever P, Q, Fig. 3, by a fork G and pin *q*. The pawl *k* is so pivoted to P and Q that movements to the right bring it into the teeth of the wheel R, and those to the left disengage it. The arm P carries a finger *p* which, at the end of the travel, strikes the one of the pins z^1–z^9 on the end of the key lever which has been thrown up into its path, whereupon the movement is arrested and the wheel P locked against over-driving. The numbering-disc, showing through a slot K, is attached to the wheel R.

FIG. 1.

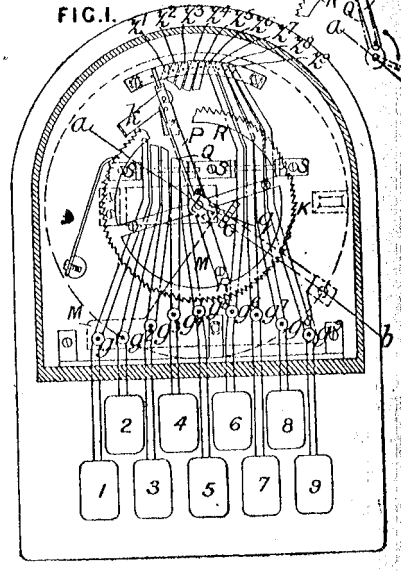

FIG. 3.

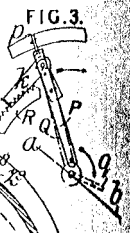

Tate S 1392/1881 ASMD

1392. Tate, S. March 29.

[*Provisional protection only.*]

Calculating-apparatus. — Improvements in the apparatus described in Specification No. 13504, A.D. 1851, are described consisting (1) in the use of a double incline formed on a spring (fixed on the middle plate of the machine) and an inclined fork, these acting together to move the number from 0 to 9, and 9 to 0 ; (2) in guiding the bars, which throw the indicator back by lips fixed on the top plate of the machine ; and (3) in the use of a bar and cams in place of the rack and pinion employed to bring the figures to 0.

Tate S 65/1884 Arithmometer

65. Tate, S. Jan. 1.

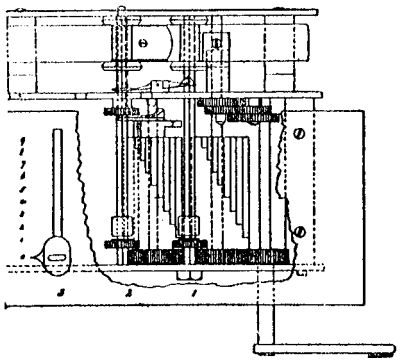

Calculating-apparatus or arithmometers. Consists in improvements on the invention described in Specification No. 13,504, A.D. 1851. (1) A lever with a double inclined head is worked by a clutch and spring, for carrying from units to tens and upwards. (2) A combination of levers, connecting-piece, and bar moves the double bevel-wheels used to reverse the operations. (3) An arrangement of spur-wheels drives the cylinders. The Figure shows a plan view of the machine with the top plate broken away.

Ref TATE'S PATENT ARITHMOMETER by C. & E. LAYTON Gemmary April 2001

English, late 1880s, signed 'TATE'S PATENT ARITHMOMETER, C. & E. LAYTON, LONDON" and also "C. A. BAYNON, AGENT, NEW YORK." This type of calculating machine was originally designed and introduced in 1820 by Chevalier Chas X Thomas de Colmar. It was the first multiplication machine to be made commercially for general sale. In 1883, S. Tate was the first in England to manufacture Thomas de Colmar-type arithmometers. His patents were taken over by C. & E. Layton, who incorporated further patented improvements. Tate's machines are generally considered to be the heaviest duty and best made of all of the late 19th century arithmometers. They were primarily manufactured for use by the insurance industry. The 15 1/2" x 3 5/8" top plate is made of 1/8" thick brass plate and the 21 7/8 x 2 1/2" slide is made of 5/16" thick brass plate. It is mounted in a 23 3/4" x 7 5/8" x 6 3/8" very thick hand dovetailed mahogany case, with brass corner banding for additional reinforcement. The machine is in very good overall condition, with most of its original lacquer finish on the face; however, 3 of the original 24 small knobs on the slide are missing (replacement knobs could easily be made by lost wax casting). It is fully functional, with a capacity of 8 x 9 x 16 figures, and still works quite smoothly. The exterior of the case is worn and darkened, but the case is so heavy that it is still completely tight and rigid. Tate's Patent Arithmometers are quite uncommon in collections today as not a large number of these fine machines were ever made, and very few have survived in working condition. The last recorded auction sale was in 1991 at the Breker Auction in Germany. See pages 102-104 in E.M. Horsburg's "Handbook of the Napier Tercentenary Celebration or Modern Instruments and Methods of Calculation" for an extensive discussion of Layton's patented improvements to Tate's original arithmometer.

Tate S 27364/1903 Update Thomas type

27,364. Tate, S. Dec. 14.

FIG. 1.

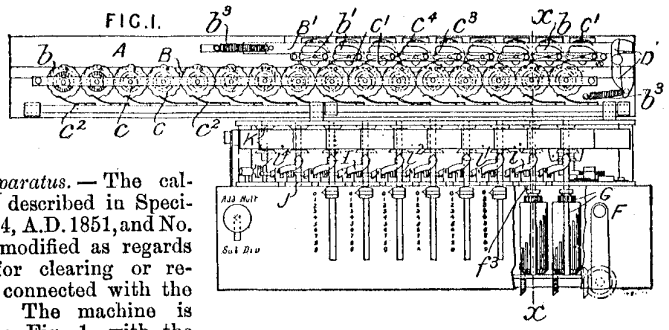

FIG. 3.

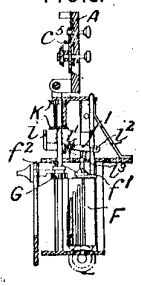

Calculating - apparatus. — The calculating machine described in Specifications No. 13,504, A.D. 1851, and No. 65, A.D. 1884, is modified as regards the mechanism for clearing or resetting, and that connected with the stepped barrels. The machine is shown in plan in Fig. 1 with the shifting long top-plate A thrown back, and Fig. 3 is a section on the line x–x of Fig. 1. The plates B, B^1 slide in grooves on the underside of the plate A instead of through strap bearings, and each plate is provided with a series of slotted openings b, b^1, to engage the cams c, c^1, for setting the index-wheels to zero. The plates are moved against the action of springs b^3 by means of the double-armed lever D. The stepped barrels F are arranged to slide on their squared spindles f^1, and each is provided with ten instead of nine teeth and carries on its upper end a grooved collar and a tooth or cam f^2. To effect the carrying from units to tens and upwards, the usual levers I, fulcrumed at i^1, and provided with double inclined heads i adapted to be struck by the pins c^5 of the index-wheels c, are formed at their other ends i^2 as clutch forks. Each fork i^2 engages a groove in a clutch rod l^3 which terminates in a fork engaging the grooved collar of the barrel; thus when the end i of the lever I is depressed, the barrel is raised so as to bring the extra tooth on the barrel into mesh with the pinion G, moving it and the double bevel-wheels K one tooth forward. The ends of the clutch forks i^2 engage with a spring-controlled retaining-device i^4, keeping the barrel in either of its extreme positions on its spindle. To return the latter to its lower normal position, a pin f^3 fixed on the plate J engages with the tooth f^2 on the barrel. The index-wheels C are retained in any given positions by means of the leaf springs c^2 and undulations on the edges of the wheels, and the index-wheels c^1 by means of spring fingers c^3, each fixed at one end to a bar or bridge c^4 and having a pin on its free end passing through a hole in the bar and engaging the teeth of the index wheels. Other parts of the machine are unaltered.

Tattersall H P & Pickard G A 18631/1901 Slide rule photo exposure.

18,631. Tattersall, H. P., and **Pickard, G. A.** Sept. 18.

Calculating-apparatus.—Relates to a slide-rule apparatus for calculating exposures, particularly applicable to focal-plane shutters with variable slits. The discs T, U are rigidly connected together, the ring S between the two being revoluble. The numbers 1, 2, &c. on T are the speed or tension figures of the shutter, the letters A, B, &c. denote the width of the aperture or slit of the shutter, and the numbers on the disc U are the times of exposure in fractions of a second arranged logarithmically. To calculate an exposure, the given letter on S is set to the given figure on T, then the time of exposure is read off on U at the arrow P.

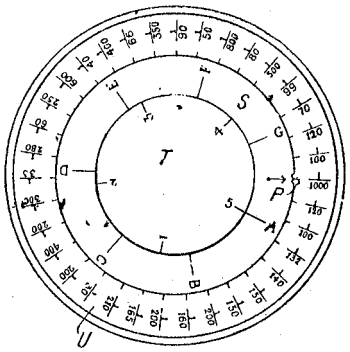

Taylor J W 8187/1906 Subtract fractions

8187. Taylor, J. W. April 5.

Calculating - apparatus. —Fractions of a unit may be subtracted by means of a base-plate B bearing a semicircular scale of two units' length graduated in sixty-fourths, above which is pivoted an overlapping quadrant A similarly divided for a distance of one unit. The base-plate may also bear tables of the areas of circles according to diameter, dimensions of standard bolts and nuts, decimal equivalents of fractions, or other information, and its edges may be marked with lines *f* representing angles, for use as a protractor.

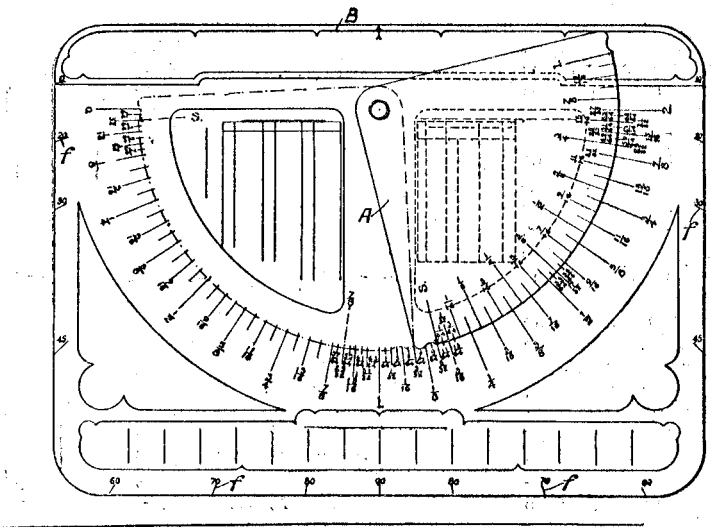

Templeton W G 24199/1901 Cheese cutting and pricing machine

24,199. Templeton, W. G. Nov. 28.

Angle gauges; computing-scales.—In connection with a cheese-cutting machine a gauge is used for determining the size of the sector to be cut, and for computing both weight and price. The gauge comprises quadrant bars 32, 38 on which are coiled springs 34, 39 coloured at equidistant points or otherwise provided with designating marks. The total weight of the cheese being known, the collar 36 is adjusted on the bar 32 so that the divisions on the spring 34 represent units of weight. The divisions of the spring 39

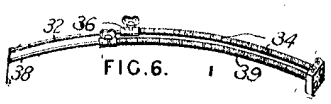

FIG. 6.

represent prices, and the spring is adjusted until the desired price per unit of weight is shown. The gauge is then ready for adjusting the cutting-knife, weighing of the cut sectors being unnecessary.

Teetzmann & Co 23816/1913 Pinwheel

23,816. Teetzmann & Co. May 10, [*Convention date*].

Multiplying &c. apparatus.—In machines of the pin-wheel and cam-disk type, wherein setting-slides are adapted to effect the setting movements of the cam-disks resulting in the extrusion of variable numbers of pins or teeth from the pin-wheels, the operating-handles of the machines are locked from idle movement when the setting-slides are in engagement with the cam-disks; the handles can, however, be released by the withdrawal of a spring-controlled pin placed centrally in the handle, whereupon the setting-slides are at once disengaged from the cam-disks. The setting is effected by means of handles *a* attached to sliding members *b* which move, in turn, the slides *c*, *d*. The slides are carried by a fixed rod *g* and by a rod *h* mounted in spring-controlled links or arms *i* so that it can move in an arc of a circle round the rod *g*. The slides *c*, *d* are capable of an upper position as shown, and a lower position shown in dotted lines, in the former of which notches *d* in the slides engage with lateral pins *e* on the cam-disks *f*, while the operating-handle is locked by a projection *k* in co-operation with a notch on the disk *f*. The movement into the upper position is caused by the rotation of a shaft *m* by means of a key *o*, Fig. 2, the movement causing the rotation of a crank or eccentric *l* which raises the links *i* and consequently the slides. In this position of the shaft *m* a spring-controlled pin *r*, which, in the normal position of the operating-handle, engages an aperture in the frame-work of the machine, engages the halved end of the shaft *m* and locks it, so that the setting-slides are secured in the upper position, the pin *r* being prevented from rotating by a stud *s* and a groove in the pin. As soon as the handle and pin *r* are withdrawn at the beginning of the operating-movement, the links *i* and the slides fall owing to the action of the spring *u* attached to the links.

FIG. 1.

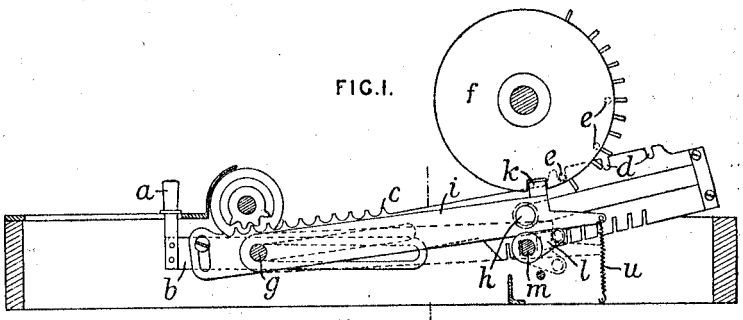

FIG. 2.

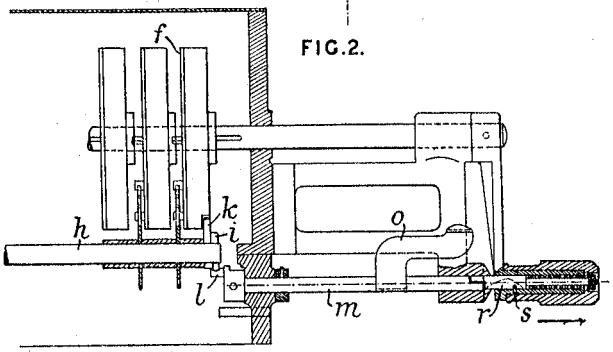

© B O B Williams Printed22/11/2023 CalcPatents Ed. 1.doc

Thomas J 3276/1900 Tab calc

3276. Thomas, J. Feb. 19.

Calculating-apparatus.—The drum A has rows of values marked upon it, corresponding to the rates marked at the end, the rows and rates showing through apertures E, D respectively. A pointer C

17

slides on a bar B graduated for weights or quantities.

FIG. I.

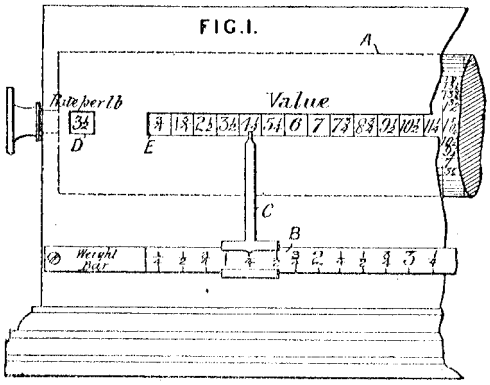

Thomas de Colmar 13504/1851 Arithmometer full

To all to whom these presents shall come, I, Charles Xavier Thomas (de Colmar), Chevalier de la Legion d'Honneur, of Paris, France, send greeting.
Whereas Her present most Excellent Majesty Queen Victoria, by Her Royal Letters Patent under the Great Seal of the United Kingdom of Great Britain and Ireland, bearing date at Westminster, the Tenth day of February (One thousand eight hundred and fifty-one), in the fourteenth year of Her reign, did, for Herself, Her heirs and successors, give and grant unto me, the said Charles Xavier Thomas (de Colmar), my e ors, ad ors, and assigns, Her especial license, full power, sole privilege and authority, that I, the said Charles Xavier Thomas (de Colmar), my e ors, ad ors and assigns, or such others as I,
the said Charles Xavier Thomas (de Colmar), my e ors, ad ors, or assigns, should at any time agree with and no others, from time to time and at all times during the term of years therein expressed, should and lawfully might make, use, exercise, and vend, within England, Wales, and the Town of Berwick-upon-Tweed, and in the Islands of Jersey, Guernsey, Alderney, Sark and Man, and also in all Her said Majesty's Colonies and Plantations abroad, my Invention of "An Improved Calculating Machine, which I call Arithmometer;" in which said Letters Patent is contained a proviso, that I, the said Charles Xavier Thomas (de Colmar), shall cause a particular description of the nature of my said Invention, and in what manner the same is to be performed, by an instrument in writing under my hand and seal, to be inrolled in Her said Majesty's High Court of Chancery within six calendar months next and immediately after the date of the said in part recited Letters Patent, as in and by the same, reference being thereunto had, will more fully and at large appear.
Now know ye, that in compliance with the said proviso, I, the said Charles Xavier Thomas (de Colmar), do hereby declare the nature of the said Invention, and the manner in which the same is to be performed, to be particularly described and ascertained in and by the following statement thereof, reference being made to the Drawings hereunto annexed, in which the same letters of reference marked thereon represent in the several Figures parts which are similar in each Drawing, that is to say:

My Invention consists in constructing an improved machine for performing all the operations of arithmetic; namely, addition, subtraction, multiplication, and division; for extracting the square and cube roots; for calculating decimals, and all other arithmetical operations.

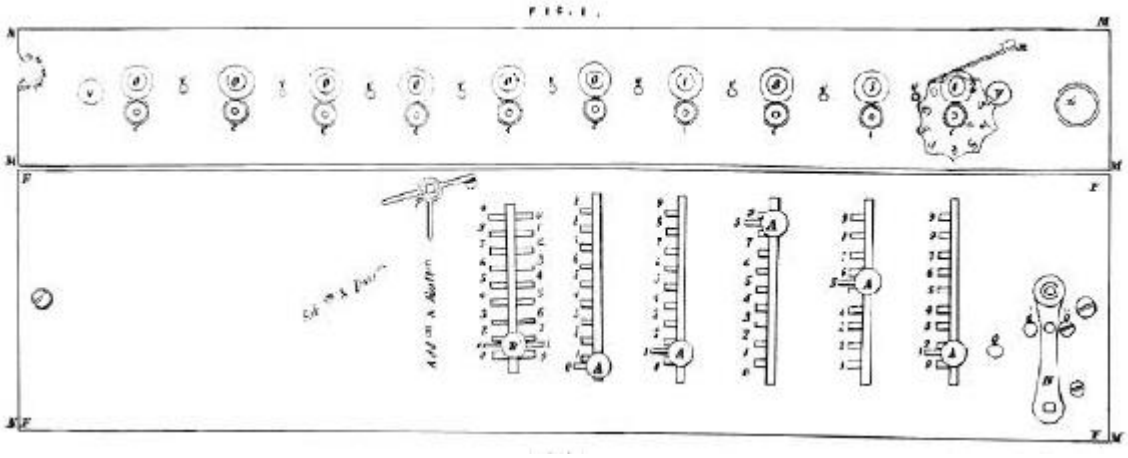

In Drawing I., Figure 1 is a plan or bird's-eye view of the machine when the lid is raised, showing the plates M, M, M, M, and F, F, F, F.

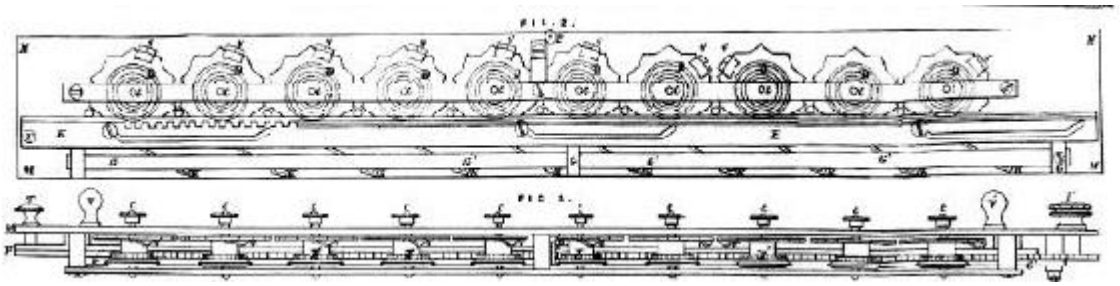

Figure 2 of the same Drawing is an underneath view of the plate M, M, M, M.
Figure 3 is a side elevation of the same plate M, M, M, M.

Figure 4 is a section of the plan of the cylinder, the plate F, F, F, F, being taken off to exhibit the working of the several organs composing the mechanism of the cylinders Y, Y, Y, Y, Y 1 , and H.

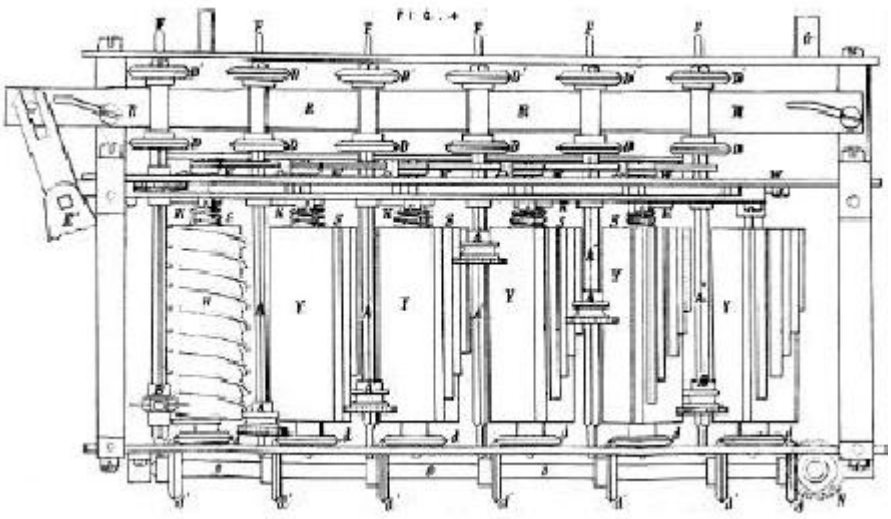

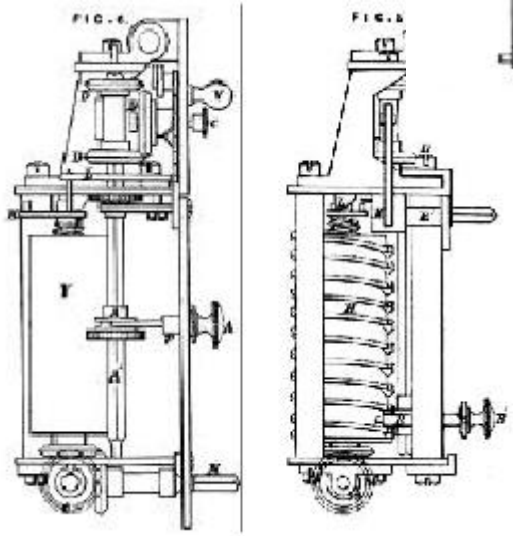

Figure 5 is a side elevation of the

cylinder H.

Figure 6 is a side section of the cylinders Y, Y, Y, Y.

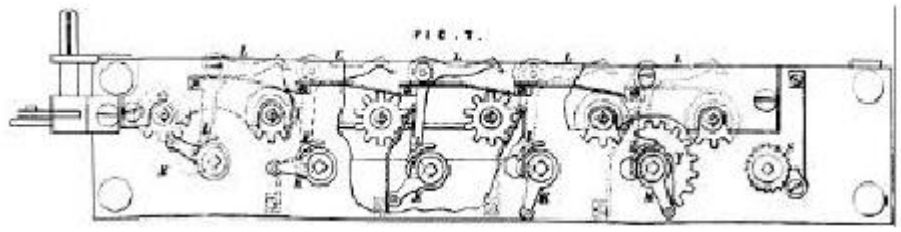

Figure 7 is an horizontal elevation through the plate R, R.

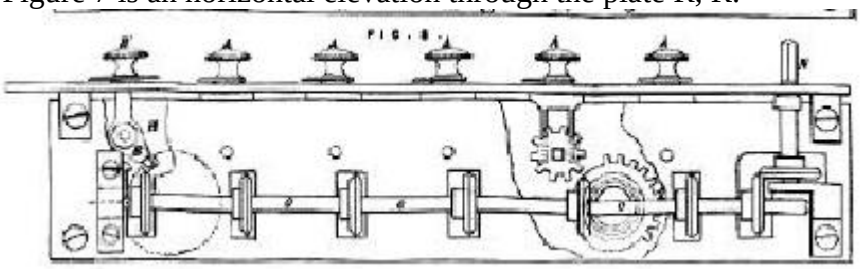

Figure 8 is a front plate, showing the rod o, o, o, and bevil wheels d_1, d_1, d_1, d_1, d_1.

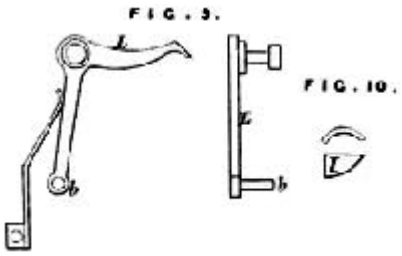

Figure 9 is a front and side view of the levers L, L, L, L. Figure 10 is a front and side view of the stops for the small levers k_1, k_1, k_1, k_1.

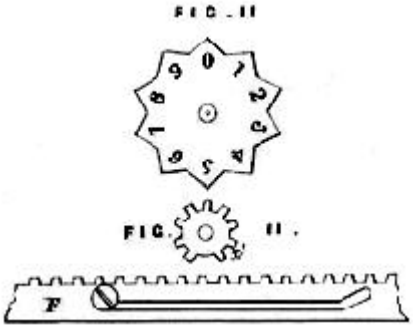

Figure 11 is a front view of the rack E, wheel X_1, and indicator plate.







Figure 12 is a front view and plan of the cylinder Y, and of the spring S.

In Drawing II., Figure 1 represents a plan of the double dial for quotient and multiplier.

FIG. 1

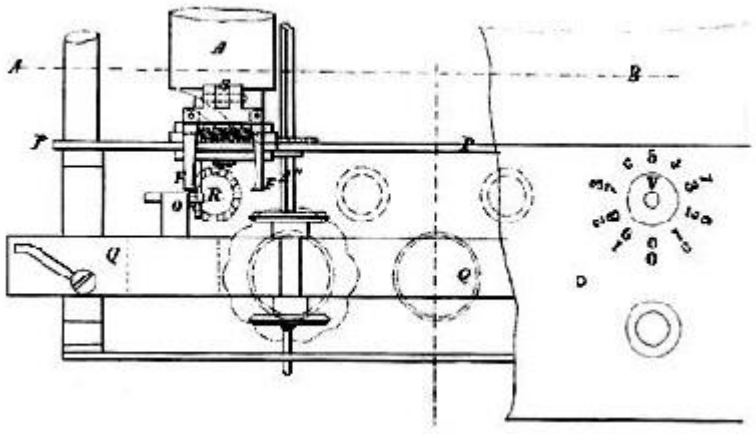

FIG. 2.

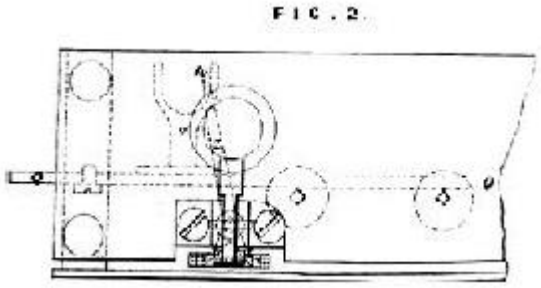

Figure 2 is a sectional elevation through A, B, of Figure 1;

Figure 3 is a side elevation of cylinder and gear to obtain the quotient and multiplier;

FIG. 3.

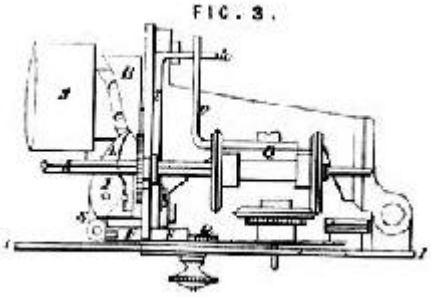

FIG. 4.

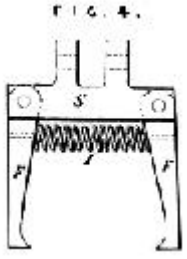

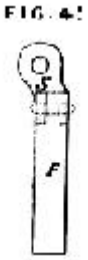

Figures 4 and 4[1] are a side and front elevation of fork lever F, F;

Figures 5 and 5[1] are a front and side view of the lever Z, Z.

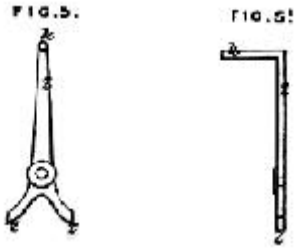

The mechanism for the multiplicant and multiplier can be inserted, as represented in the Drawing I., in a box having about 2 in. 1/8 in elevation, one foot three inches in length, and 6 in. 1/4 in width. It is composed of two plates, as represented in Figures 7 and 8 of the Drawing I., which said plates are united together by four pillars, seen in Figures 4, 5, and 6, and of another small plate carrying the guides G, G, G, in which the steel rod G_1, G_1, is sliding, as seen in Figures 2 and 3.

The box is covered with a wrought iron or brass plate, which may be about 5 in. 1/4 in width, and 1 ft. 1/5 in length, as represented by the letters F, F, F, F, Figure 1. This wrought iron or brass plate is provided with an equal number of slits as there are figures for the multiplicant beside one more for the multiplier. It is in those slits which are in Drawing I., six in number, that the knobs A, A, A, A, A, Figures 1, 6, and 8, with their indicating hands, by which the figures of the multiplicant are pointed out, and the knob B_1, Figures 1, 5, and 8, with its double hand, indicate the figures of the multiplicator or devisor, are made to slide, as it will be herein-after described.

The ten dials c, c, c, c, c, Figures 1, 2, 3, are separated from each other by about 3/4 of an inch, and are fitted on another plate M, M, M, M, having about 1 in. 7/8 in width, and 1 ft. 1/8 in length. Each of these dials c, c, c, c, c, represent ten figures, from 0 to 9, which serve to indicate by means of openings cut, as shown in the herein-before described plate M, M, M, M, the products obtained by the working of the machine. The above-described plate M, M, M, M, can be made to raise and to slide along the box upon the herein-before described steel rod G_1, G_1, Figures 2 and 3, which serves as a hinge to the said plate M, M, M, M, and by that contrivance it causes the line of the dials c, c, c, c, c, to be changed, which renders them successively independent of the mechanism when it is put in motion. I fix on the same plate M, M, M, M, but underneath each of the said dials c, c, c, c, c, the wheels D, D, D, D, Figures 2, 3, and 6, provided with ten cogs.

Each dial carries a double inclined steel pin u, u, u, u, Figures 2, 3, which presses on the catching levers L, L, L, L, Figures 4, 6, 7, and 9, and disengages the catching each time the dials pass from 0 to 9, or from 9 to 0. The small flat wheels X_1, X_1, Figures 3 and 11, divided in ten equal parts, but with only nine cogs, are cast on every wheel D, D, D, D, of the dials c, c, c, c, c, as herein-before stated. These small wheels X_1, X_1, cause all the dials c, c, c, c, c, to be replaced at once to 0 by means of the rack E, E, E, Figures 2, 3, and 11, either by drawing the knob T, Figures 1, 2, and 3, or by means of any other suitable mechanism, giving to the wheel X_1, X_1, a rotative motion, as in Figure 11.

When the dials c, c, c, c, c, are at 0, the said wheels X_1, X_1, are in the position represented by the said Figure 11. The cylinders Y, Y, Y, Y, seen in Figures 4, 6, and 12, are provided with nine graduated cogs cut lengthway, in order to represent the figures of the multiplicant from 1 to 9. The teeth of the cylinders Y, Y, Y, Y, Figures 4, 6, and 8, catch with the small wheels A_1, A_1, A_1, A_1, A_1, of the same Figures. These wheels are provided with ten cogs, and they are put in motion by means of the fork P, Figures 6 and 8, with which the indicating knobs A, A, A, A, A, already described, are provided. The wheels A_1, A_1, A_1, A_1, A_1, slide over the square axes A_{11}, A_{11}, A_{11}, according to the motions of the fork P, and of the knobs A, A, A, A, by which they are conducted to the figures of the multiplicant.

It is then that the herein-before described wheels A_1, A_1, A_1, A_1, A_1, catch their separate cogs with the section of the teeth cut, as herein-before described, on the length of cylinders Y, Y, Y, Y, which have the number of their cogs equal to that of the figure exhibited by the indicating knob A, A, A, A. When the cylinders Y, Y, Y, Y, perform a rotative motion, they cause the small wheels A_1, A_1, A_1, A_1, to turn the same number of cogs which the figure facing the indicating hand of the knobs A, A, A, A, points out, and the dials c, c, c, c, render visible the same figure through their opening on the moveable plate M, M, M, M, Figure 1. On the left of the cylinders Y, Y, Y, Y, Figure 4, another cylinder H, Figures 4 and 5, cut helically, is set, and a slit cuts in all its length, allows the lever B, seen in Figures 4, 5, and 8, and put in motion by the knob B_1, Figures 1, 4, 5, and 8, to regulate the number of revolutions the cylinders Y, Y, Y, Y, are to perform together, in order to represent one of the figures of the multiplier. Thus, for instance, when the hand of the knob B_1, Figures 1, 5, and 8, indicates the figure 9
of the left column, the multiplicant will be multiplied by 9.

All the herein-before described cylinders Y, Y, Y, Y, Figures 4, 5, 6, 7, 8, and 12 of the multiplicant, as well as the cylinder H of the multiplier, are provided at one of their extremities with bevil wheels d, d, d, d, having twenty cogs which catch with a similar number of bevil wheels d_1, d_1, d_1, d_1, set on the same axis o, o, o, Figures 4, 5, 6, and 8. On the right hand of the herein-before described axis o, o, o, is placed the bevil wheel d_{11}, which cogs with the wheel set on the axis of the crank arm N, Figures 1, 4, 6, and 8. Close to the other extremity of the cylinders, Y, Y, Y, Y, of the multiplicant and of the cylinder H of the multiplicator, less however the cylinder Y_1 set on the right, I have placed a system of cogs Z, Z, Z, Z, to operate the catchings. The moveable pins set on the levers k, k, k, Figures 4, 5, 6, 7, and 12, cog only with the ten cogs wheels Z, Z, Z, Z, Figure 7, when they are to operate the catchings. In order to obtain that effect the spiral springs S, S, S, S, Figure 4, 5, 6, and 12, placed between the levers k, k, k, and the cylinders Y, Y, Y, Y, and H, as represented by Figure 12, act on the said levers k, k, k, and force them to meet during their circular motion the catch wheels

Z, Z, Z, Z, Figure 7. This last movement takes place only when the dials c, c, c, c, c, have passed from 0 to 9, or from 9 to 0, because the small double inclined pins u, u, u, u, herein-before described, Figures 3 and 6, by pressing them on the levers L, L, L, Figures 7 and 9, allow the spiral springs S, S, S, S, to cause the descending motion of the levers k, k, k, Figures 4, 5, 6, 7, and 12, which action they would not perform otherwise, being kept by the small pin b, b, of the levers L, L, L, Figure 9.
The spiral springs S, S, S, S, being distended and the small levers k, k, k, lowered, when the cylinders are made to turn by the action of the crank arm N, the small levers k, k, k, meet the catch wheels Z, Z, Z, Z, and compel them to turn one cog, which causes the dials c, c, c, c, c, to turn of one figure, then the small levers k, k, k, by continuing after their circular motion meet on their passage with the small inclined pieces I, I, I, I, Figures 5, 6, 7, and 10, fixed on the small plate, Figure 7. These small inclined pieces I, I, I, I, will cause the small levers k, k, k, to ascend again to their former position, and at that place they are maintained by the herein-before described small pin b, of the levers L, L, L, Figure 9.

The aforementioned small levers k, k, k, having thus returned to their usual position, as afore stated, if the cylinders Y, Y, Y, Y, are made to turn the said small levers k, k, k, will pass in front of the catch wheels Z, Z, Z, Z, Figure 7, without causing the said wheels to rotate.

I must explain here the reasons which have induced me to use only nine cogs on the cylinders Y, Y, Y, Y, Figures 4 and 8. It is absolutely necessary that each of the cylinders Y, Y, Y, Y, should receive the catchings after having produced its figure, and to perform that operation it is required that the holdings or catchings be produced in due succession one after the other. It was therefore indispensable that the tenths should be produced before the hundredths and the hundredths before the thousandths, and so on. For that reason I have necessarily placed the cylinders Y, Y, Y, Y, Figure 4, in such a position that they are able to cog with the wheels A_1, A_1, A_1, A_1, A_1, of the multiplicant figure one after the other, then the cylinders Y, Y, Y, Y, and their levers k, k, k, will be placed relatively to each other in the position as represented in Figures 4 and 7.
The subtraction and division being the reverse rules of the addition and multiplication, to perform these last operations I have fixed on the square axes A_{11}, A_{11}, A_{11}, A_{11}, on which the wheels A_1, A_1, A_1, A_1, are made to slide, as herein-before described, two bevel wheels, having each of them ten teeth, which cause the dials c, c, c, c, c, to turn from right to left and from left to right. The square axes A_{11}, A_{11}, A_{11}, A_{11}, on which the bevil wheels D, D, D, D, and D_1, D_1, D_1, D_1, are set, have their pivots jutting out, as represented in F_1, F_1, F_1, F_1, Figure 4, in order that they should be made to operate in the direction of their length without moving out from the plates into which their pivots are made to turn. Between the two bevil wheels D, D, D, D,
and D_1, D_1, D_1, D_1, are set the plates with grooves having the same width than the band R, R, Figure 4.
I cause all the bevil wheels D, D, D, D, and D_1, D_1, D_1, D_1, to recede or to advance together by means of the said band R, R, which passes in the grooves of the bevil wheels in order to have those of the front or back to cog with the wheels of the dials c, c, c, c, c. I obtain this change from the multiplication to the division, or that from the addition to the subtraction, and vice versa, by turning the wing nut E_1, Figures 1 and 4; in that manner its indicator points out the real operation to be

performed. The large knob L 1 , of Figures 1 and 3 serve to raise the plate of the dials c, c, c, c, c; the two knobs V 1 , V 1 , Figure 1 and 2, can be placed indifferently into the small holes V, V, V, of the dial
plate M, M, M, M, when semicolons are required to separate the several aliquot parts or to divide the numbers in groups of two or three figures and to extract the square or cube root of a number and also for fractions and decimals.

I can also obtain the quotient in the division and the multiplier in the multiplication by setting on the back of the first cylinder on the right, A, Figures 1 and 3, Drawing II., that is to say, on the back of cylinder Y 1 , Figure 4, Drawing I., a cylindrical piece B, Figure 3, Drawing II., having about 7/10 of an inch in diameter and provided with a groove c, c, Figure 3, being about 1/10 of an inch deep. This groove c, c, cuts obliquely in two parts and in a contrary direction the cylindrical piece B, in order to give to a lever L, Figure 3, entering into the said groove, an alternate motion. The lever L, is moveable
in an hinged piece S, Figures 1, 3, 4, and 4 1 , set on the back plate, and is provided at its upper extremity (having also a hinge) with a fork F, Figures 1, 3, 4, and 4 1 , the two arms of which are moveable, and commands a spiral spring T, Figures 1 and 4 having a tendency to cause the said arms to approach one from the other.

The arms F, F, Figures 1, 3, 4, and 4 1 , of the fork are bent inside and serve to put in motion a wheel R, Figures 1, and 3, having about 7/16 of an inch in diameter, and this wheel R is provided with ten square teeth and is fixed to the dial plates. On its axis I set an indicating hand working on the openings plate and pointing out on a dial V, Figure 1, having a double row of figures, the number of rotations performed by the crank arm N, Drawing I. The red numbers on the dial V, Drawing II., indicate the quotient, and the black numbers those of the multiplier. On the lower part of the small iron band Q, Q, Figures 1, 2, and 3, communicating with the wing nut E 1 , of the Drawing I., is set a piece O, Figures 2 and 3, Drawing II., supporting perpendicularly a fork projecting towards the bottom of the apparatus. Between the two arms of the herein-before described fork a pin K, Figures 1, 2, 3, 5, and 5 1 , is moving. The said pin K forms a part of the lever Z, Figures 1, 2, 3, 5, and 5 1 , fixed to the back plate by means of a screw. The lever Z is ending in the shape of a fork Z, Z, Figures 1, 2, 3, 5, and 5 1 , the arms being at angle and kept in between the two arms F, F, and the spring T, herein-before described. The small iron band q, q, Figures 1, 2, and 3, communicates a right or left motion to the lever Z commanding the back plate according to the motion given to the crank arm E 1 , Drawing I., for performing either an addition or subtraction. The right or left hook Z, Z, Figures 2, 3, 5, and 5 1 , of the lever distends the corresponding arm of the fork F, F, Figures 1, 3, 4, and 4 1 , leaving the opposite arm to be alone in communication with the cog wheel R.

Each revolution of the crank arm N, Drawing I., causes an alternate motion to the fork, the arm of which communicating with the wheel R, Figure 3, Drawing II., causes the last to turn of a cog from right to left or from left to right according to the arm which is acting on the said wheel R. I set on the dial plate V, Figure 1, the same number of cog wheels R, with their hands and double set of figure dials, as I have placed cylinders in the machine. The same fork F, F, Figures 3, 4, and 4 1 , will act successively on the several wheels when put in communication either by carrying the plate on the right

or on the left. The dial plate for the present arrangements have been increased of 5/16 of an inch in length, the square axes A 11 , A 11 , A 11 , and the pillars of back plate, Drawing I., of the machine have also been lengthened of the same quantity.

Modus Operandi of the Arithmometer.

The apparatus operates by following the elementary principle of the arithmetic, and its movements seem to follow and to indicate the judgment which is required to perform a scientific operation.

Addition

I operate an addition by setting down with the knobs A, A, A, A, A, Figure 1, Drawing I., the numbers on which I am to make the operation, and by pushing for each number the knob B 1 of the multiplier, which is the last on the left, I turn the crank arm N until it stops and the figures pointed out by the knobs A, A, A, A, A, are exhibited on the dials c, c, c, c, c, through the openings on the plate M, M, M, M. If I begin again what his been herein-before stated, I have all the numbers added one to the others, which is really making an addition, and the total will be exhibited on the dials c, c, c, c, c, through the openings as before stated instead of setting for every sum the multiplicant A, A, A, A, A, to one it is more preferable to push it to nought and to take no notice of it, the only thing required then being merely to have the crank arm N to perform one revolution.

Multiplication

To perform the multiplication I operate in a manner similar to that herein-before described when speaking of the addition. However, instead of placing the multiplier B 1 to 1, I set it to the figure by which the operation of multiplying is to be performed; thus, for instance, if I have the number 35,695, to multiply by 2, I place the multiplier B 1 at 2, and I turn the crank arm N, until the hand of multiplier B 1 be forced to stop. If I had to multiply the above number 35,695 by the number 22, I would be obliged in the same manner, and as if I had to write the figures with a pen, to multiply again the same
sum of 35,695 by the same number 2, therefore I take care to raise the plate M, M, M, M, of the dials i, i, i, i, and to push it off a notch from right to left in order that I should no longer operate on the units, which be then separated as a matter of course. If I had to multiply with hundreds I would have to operate in the same manner, that is to say, I would be obliged to disengage the tenths, and so on. For any other quantity, following the principle herein-before described, I would, according to what I have before stated when speaking of addition, perform the operation of multiplication without making use of the multiplier B 1 by placing it at nought and by giving as many turns of the crank arm N as the number 1 is found repeated in the sum which is to serve for the multiplier. The apparatus can multiply by means of the same number of figures as there are contained in the multiplicant; I construct apparatus having eight and sixteen figures and I find no difficulty in constructing them with even a much larger number.

Subtraction.

I perform that operation in a manner similar to what I have herein-before described when speaking of addition. The only difference is that I turn the wing nut E for the subtraction, which causes the wheels D, D, D, D, and D 1 , D 1 , D 1 , D 1 , of the dial to cog in the reverse direction to that of addition.

Division

To perform that operation I operate by turning the wing nut E 1 in the same manner as I have herein-before described when speaking of subtraction. The dividend must be set down in the dial, and by writing the sum by means of the small knobs which are prepared for every opening, I write the division in the same manner as I wrote the multiplicant, by means of the knobs A, A, A, A, A. However, the operation is conducted in the reverse manner to that of the multiplication; that is to say, I begin to act on the figure placed on the left. Thus, for instance, if I wish to divide 625 by 25, I place 62 above 25
(according to the principle I have herein-before described (when speaking of the multiplication,) and I set the multiplier B 1 at the top of the slit, and I turn then the crank arm N until the figure of the dividend be less than that of the devisor. The knob of the multiplier B 1 will point out the number of times the sum is contained. For the above example 625/25, I will obtain 2 for the first figure from right to left, and I operate on the remaining number as I have operated on the figure 62. I turn five times the crank arm N, and I will obtain nought; therefore the number 25 will be found to be contained 25 times
in the number 625.

And having now described the nature of my said Invention, and in what manner the same is to be performed, I wish to be understood that I do not restrict myself to the precise details, proportions, or modus operandi I have described, provided the general features of the organs and arrangement of my Invention be preserved; but what I claim as my Invention, and intended to be protected by the herein-before recited Letters Patent, is, -
Firstly, the constructing and dividing cylinders as herein-before described, reference being had to Figures 4, 5, 6, 7, 8, or 12 of Drawing I.
Secondly, the obtaining the products, as herein-before described, reference being had to Figures 1, 3, 4, 5, 6, and 8 of Drawing I.
Thirdly, the changing from multiplication to division, and from addition to subtraction, as herein-before described, reference being had to Figure1 & 4, Drawing I.
Fourthly, the mode of effecting the stoppings as herein-before described, reference being had to Figures 7, and 9 of the Drawing I.
Fifthly, the method of replacing the numbers to 0 as herein-before described, reference being had to Figures 2, 3, and 11, of Drawing I.
Sixthly, the arrangement for putting the machine in motion as herein-before described, reference being had to Figure 1, 4, 5, 6, and 8, of Drawing I.
Seventhly, the arrangement for obtaining the quotient and multiplier as herein-before described, reference being had to all the Figures of Drawing II.

In witness whereof, I, the said Charles Xavier Thomas de Colmar, have hereunto set my hand and seal, this Seventh day of August, in the year of our Lord One thousand eight hundred and fifty-one.
Charles Xavier (L.S.) Thomas (de Colmar.)
Taken and acknowledged by Charles Xavier Thomas de Colmar (party hereto) at Paris, in the Republic of France, this 7th day of August 1851, before me,
A.
This is the Specification marked A, referred to in the affidavit of Peter Armand le Compte de Fontaine Moreau, sworn before me, this 9th day of August 1851.
Henry Mowbray.

I, Peter Armand le Comte de Fontaine Moreau, of 4, South Street, Finsbury, in the County of Middlesex, Patent Agent, make oath and say, that I am acquainted with the manner and character of the handwriting of "Thomas Pickford," Her Britannic Majesty's Consul of Paris, in the Republic of France.

And this deponent further saith that the signature "Thomas Pickford," set, subscribed, or written in the margin of the Specification hereunto annexed, marked A, and dated the Seventh day of August instant, and purporting to be executed by Charles Xavier Thomas (de Colmar), Chevalier de la Légion d'Honneur, of Paris, France, whereby it is stated that the Specification was acknowledged by him, the said Charles Xavier Thomas (de Colmar), before the said "Thomas Pickford, on the said Seventh day of August, at Paris aforesaid, is of the proper handwriting of the said "Thomas Pickford.

L' de Fontaine Moreau.

Sworn at the Chancery Affidavit Office, Southampton Buildings, Chancery Lane, in the

County of Middlesex, this 9th May of August 1851, before me,

Henry Mowbray.

And be it remembered, that on the affidavit of Peter Armand le Comte de Fontaine Moreau, the Specification aforesaid was enrolled word for word as above written. And also the Specification aforesaid was stamped according to the tenor of the Statute made for that purpose.

Enrolled the Ninth day of August, in the year of our Lord One thousand eight hundred and fifty-one.

LONDON:
Printed by George Edward Eyre and William Spottiswoode,
Printers to the Queen's most Excellent Majesty. 1857.

Figures:

Drawing I. : 1, 2, 3, 4, 5, 6, 7, 8, 9, 10, 11, 12;

Drawing II.: 1, 2, 3, 4, 4_1, 5, 5_1.

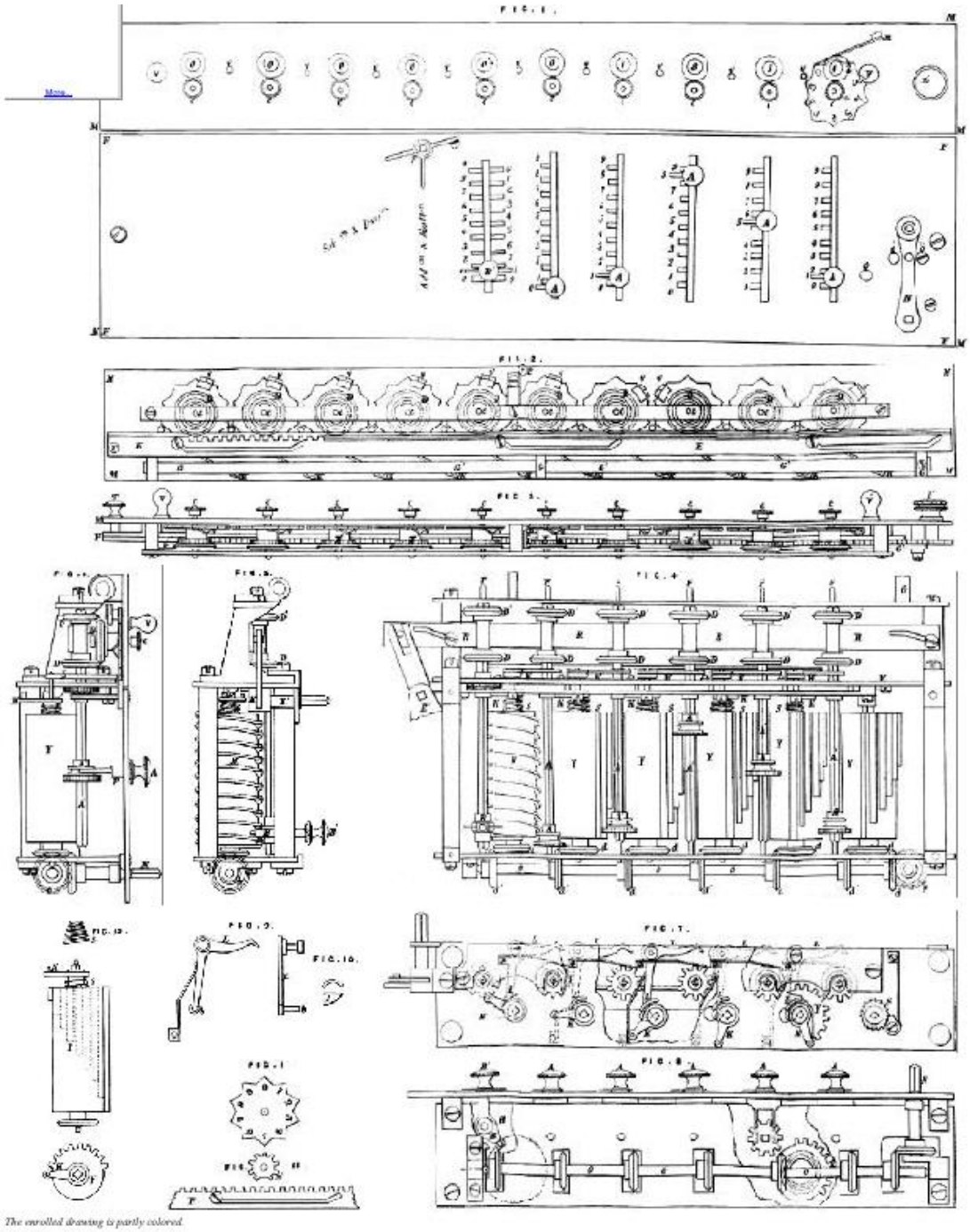

The enrolled drawing is partly colored.

London:Printed by George Edward Eyre and William Spottiswoode,
Printers to the Queen's most Excellent Majesty. 1857.

A.D.1851. Feby. 10, Nº 13,504.
THOMAS DE COLMAR'S Specification.

Drawing 2

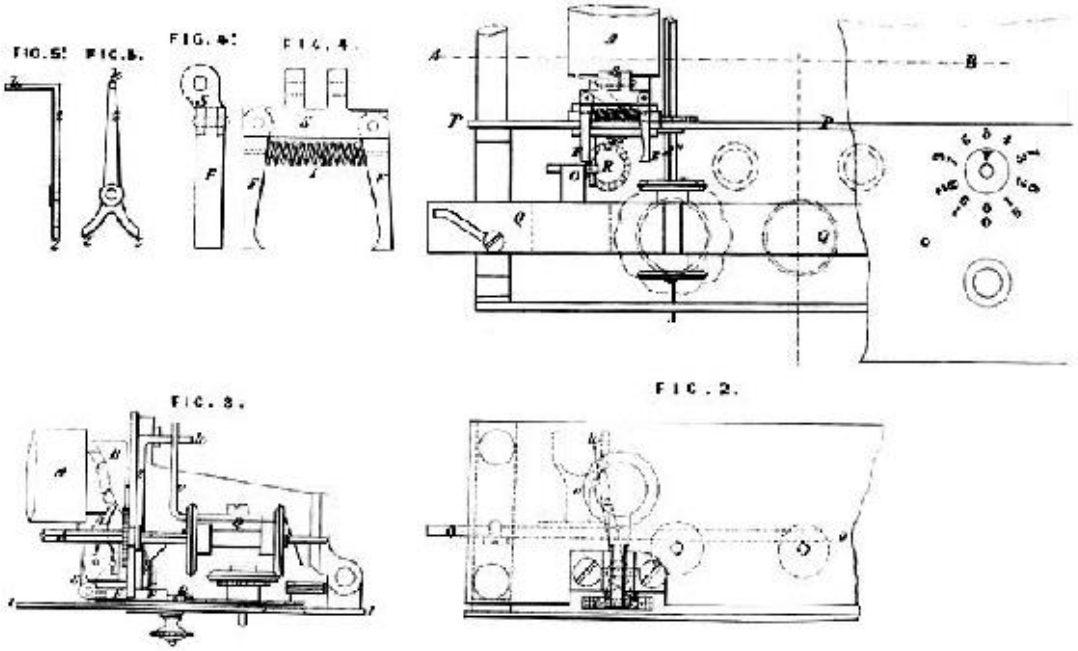

The enrolled drawing is partly colored.

London:Printed by George Edward Eyre and William Spottiswoode,
Printers to the Queen's most Excellent Majesty. 1857.

See Article
[29]

Thomas G & Harling G 2083/1907 Slide rule for strength of fabric

2083. Thomas, G., and **Harling, G.** Jan. 28.

Slide-rules are combined with weighing-apparatus for testing a given length of fabric. Of the three circular scales f^1, i, g, the innermost scale f^1 is marked with weights corresponding to those on the steelyard c and is moved until the numeral corresponding to the position of the poise d comes opposite a mark on the fixed scale i, which indicates different widths of fabric. The scale g, which is transparent and marked with numerals representing lengths of fabric, is then moved until a fixed mark on it is over that numeral in the scale i which corresponds with the width of the fabric. The weight of any length of the fabric can then be read on the scale f^1.

FIG. 1.

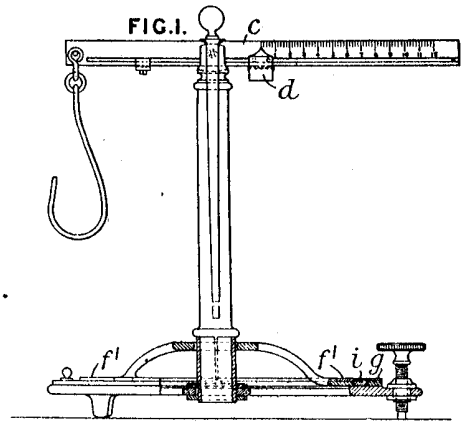

Thomas C G G 2228/1907 Tab calc for elec resistance

2228. Thomas, C. G. G. Jan. 29.

Calculating-apparatus.—In computing-scales for calculating electric resistances, two disks *a*, *b*, Fig. 5, are pivoted together at their centres, and the resistance tables are arranged in radial columns on the inner faces of the disks, each column giving the resistances of a unit length of various materials of a particular diameter, cross-section, or gauge. A radial slot *c* in one disk, or in both, serves for exposing the tables, the names of the materials being indicated against these slots, as at *f*, on the outer faces of the disks.

FIG. 5.

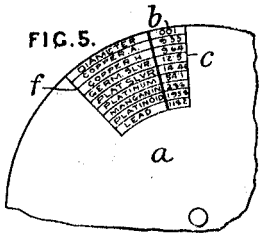

[Reference has been directed under Patents Act, 1902, to Specification No. 3675, A.D. 1899.]

Thomson J & Petri A 23913/1902 Area of leather

23,913. Thomson, J., and **Petri, A.** Nov. 1.

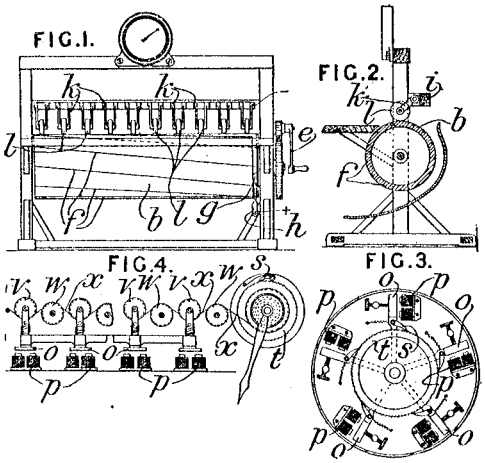

Calculating-apparatus.—An apparatus for measuring the area of leather, hides, and the like comprises a roller *b* of known superficial area, having upon its periphery ten or other number of metal strips *f* arranged at equal distances apart, and connected to a metal ring *g* which is in circuit through a rubbing spring *h* with a source of electricity. Keys, consisting of movable arms *k* and rollers *l*, are mounted upon a support *i* at distances apart exactly corresponding to those between the strips *f*, and are so connected to electromagnets *p* that the latter come into operation under all circumstances when the roller is running quite empty. When a piece of leather is laid upon the roller *b* and the roller is rotated by the crank *e*, the keys *l* are lifted up by the leather so far as it covers the surface of the roller, whereby contact with the strips *f* is broken. Where, however, the roller remains uncovered, the keys *l* make contact with the strips *f*, causing the electromagnets *p* to attract the armatures *o* and actuate through the pawls *s* the ratchet *t* of an indicator, Fig. 3. The area of the leather is indicated by a pointer on a scale graduated to show on the one side how much is wanting, and, on the other side, how much there is. The strips *f* are arranged parallel to the axis of the roller *b* when a separate electromagnet *p* is provided for each of the keys *l*, and are inclined when several keys *l* are connected to a common electromagnet, as in Fig. 3. A flat reciprocating table or plate may be substituted for the roller *b*, and the indicator may be arranged as shown in Fig. 4, in which small rollers *v* on the armatures *o* are supported on a spring *x*, which runs over fixed rollers *w* and actuates the ratchet *t* when the spring *x* is acted on by the attraction of the armatures *o*.

Thomson J H 5540/1881 Log Log Slide rule

5540. Thomson, J. H. Dec. 17.

Calculating-apparatus for raising a number to any power, fractional or integral, calculating compound interest, &c. It consists of an ordinary logarithmic scale, sliding in contact with a scale divided so that the distances from a fixed point are proportional to the logarithm of the logarithm of the number marked on the scale.

Thomson G 14453/1894 Napier's bones book form

14,453. Thomson, G. July 27.

Calculating apparatus.—Relates to an improvement in the book-form arrangement of "Napier's bones," described in Specification No. 2885, A.D. 1877. A book is formed of 5 sheets stitched into a cover, and each sheet and cover is ruled into 10 vertical columns. The lower edges of the cover which project below the sheet are marked across with numbers 1, 2, 3 . . . 9, Fig. 13, and the letter N above which the number to be multiplied is set out. The sheets are cut into horizontal strips so

For 2885/1877 see SAWYER

as to form a series of ten independent books, and the first sheet of each, formed by the cover and first page, is left blank. In the second sheet, the columns are filled with ciphers along the lower edge,

FIG. 3.

0	0	0	0	0	0	0	0	0	0

FIG. 4.

1	2	3	4	5	6	7	8	9	1

FIG. 5.

				1	1	1	1	1	
2	4	6	8	0	2	4	6	8	2

FIG. 6.

			1	1	1	2	2	2	
3	6	9	2	5	8	1	4	7	3

FIG. 13.

				1	1	1	1	1	
2	4	6	8	0	2	4	6	8	2
		1	1	2	2	2	3	3	
4	8	2	6	0	4	8	2	6	4
	1	1	2	2	3	3	4	4	
5	0	5	0	5	0	5	0	5	5
	1	2	2	3	4	4	5	6	
7	4	1	8	5	2	9	6	3	7

Fig. 3; in the next three, the results of multiplying the numbers 1 to 9 by 1, 2, and 3 are exhibited and the multiplying number itself appears in the 10th column, Figs. 4, 5, 6, the "tens" digits being placed at the upper edge of the strips. The remaining sheets are correspondingly marked for the other numbers up to 9. Any number to be multiplied, say 2457, as shown in Fig. 13, is set out above the letter N by opening the various books at the appropriate places. The usual process is then proceeded with. For convenience in turning to the correct pages specially arranged index may be placed at the right hand side of the pages.

Tidswell H R 134752 of 1919 Tab calc to predict sex of babies

134,752. Tidswell, H. R. April 7, 1919.

Calculating - apparatus; tabular calculators. — Apparatus for determining the sex of children before birth is based on the theory that ovulation arises from the ovaries in turn, and that one ovary always produces male ova and the other female. Various forms of apparatus for facilitating the computations are described. In the construction shown in Fig. 1, a drum C is graduated spirally as shown; each spiral strip is divided into lengths denoting the same or the opposite sex relatively to the last child born, and five sets of such graduations are provided to allow for ovulation periods varying from 26 to 30 days. A co-axial drum B is graduated in dates and a third drum D carries a bar E graduated in years and provided with a cursor F having a pointer giving a distance from the bar equal to 365—280 days. In using the device, the bar E is set to the date of the last child, the drum C is turned to zero with respect to the bar, the bar is then set to the date of the expected birth, and the spiral corresponding with the number of elapsed year and the ovulation period in question shows the sex against the bar. In other forms, superposed graduated disks are employed, and where provision is not made on the device for various ovulation periods, a chart may be used showing results for other periods given the result for the normal period.

FIG. 1.

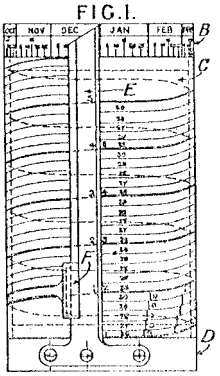

Tillman F J 4784/1909 ASMD

4784. Tillman, F. J. Feb. 26.

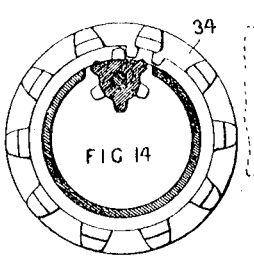

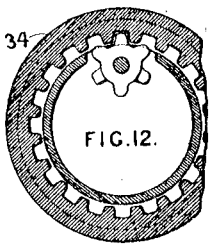

FIG.10.

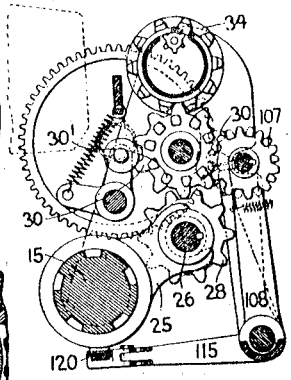

FIG.11

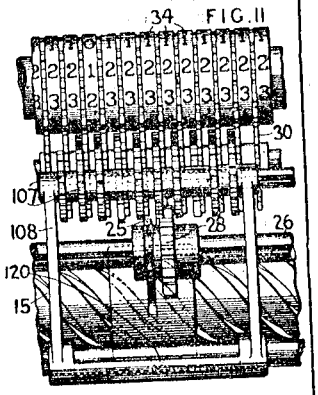

Adding, subtracting, and multiplying apparatus; operating by motors; selecting denomination.—A typewriter is provided with a calculating-attachment which forms a key-set motor-operated single-bank machine. The multiplying operation is effected by the interposition, between the differential wheels and the denomination-selecting wheel, of a multiplying train of wheels. The depression of a key in the numeral bank rocks a controller arm 57, Fig. 6, and moves one arm of an

FIG.6.

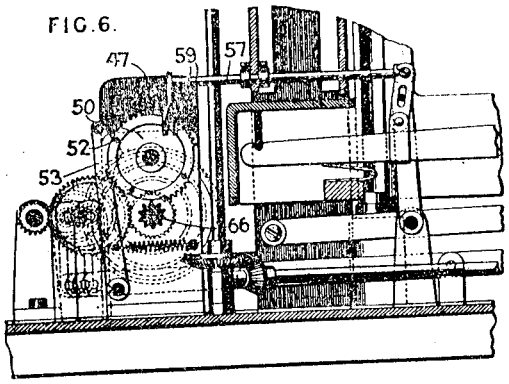

escapement-device 59 from the path of a pin 52 on one side of the corresponding interrupted differential wheel 50, and the other arm into the path of a similar pin on the other side of the wheel. A spring-controlled cam-arm 53, normally engaging one of the pins 52, rotates the wheel sufficiently to cause it to be engaged by a continuously-rotating motor-driven cylindrical gear-wheel 47, which thereupon rotates the wheel through an angle corresponding to any one of its sets of teeth, each set having a number of teeth corresponding to the value of the depressed key. The differential movement is transmitted directly to a cylindrical gear-wheel 66, thence (for adding) by bevel-gearing 69, 71, Fig. 3, shaft 70, and bevel-gearing 77, 78,

Timmis R & Bell J F 653/1892 Add columns

653. Timmis, R., and **Bell, J. F.** Jan. 13.

Calculating - apparatus. — Relates to a machine for adding up one or more columns of figures. A horizontal adding-wheel A for numbers, money, or measures, with an attached ratchet-wheel a^2, is rotated in a casing with a reading - aperture by means of keys f acting at different leverages on a ratchet lever g^2 in engagement with the ratchet-wheel. A second adding-wheel B, with ratchet-wheel b^2,

FIG. 7.

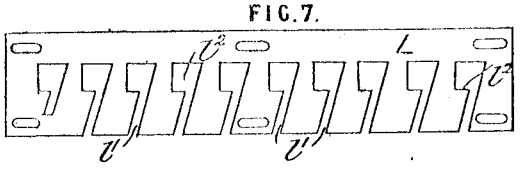

FIG. 7a.

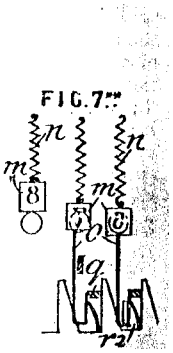

Timmis R & Bell J F 21420/1892 Adder

21,420. Timmis, R., and **Bell, J. F.** Nov. 24.

FIG. 1.

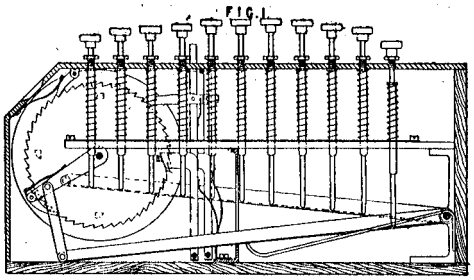

Calculating - apparatus. — Relates to adding-machines. Push-keys, as shown in Fig. 1, act on a long beam, its leverage corresponding to the numbers marked upon them, and a ratchet lever linked to the swinging end of the beam transmits corresponding angular movements to a combined ratchet and numbering wheel. The wheel is provided with lugs on its face behind the highest indications, which strike an upright vibrator with tappet and pawl, which in turn "carries" to an adjacent number wheel.

Todd J G 10119/1908 Adder ticketer

10,119. Todd, J. G. May 9.

Calculating - apparatus; counting - apparatus; ticket clips and punches.—In calculating-apparatus employing manually-operated sliding members which are moved distances proportional to the amount to be added or subtracted, means are provided for adapting the apparatus for computations in different scales, and the application of the device to ticket-punching apparatus is described. The apparatus comprises a series of weight-controlled rack-bars B, Figs. 1 and 3, suspended in an approximately vertical frame, each rack-bar being

provided with an adjustable plate E^1 bearing a catch or projection E and index-plate F. Each index-plate carries two vertical columns of figures as shown, the left-hand columns being used for

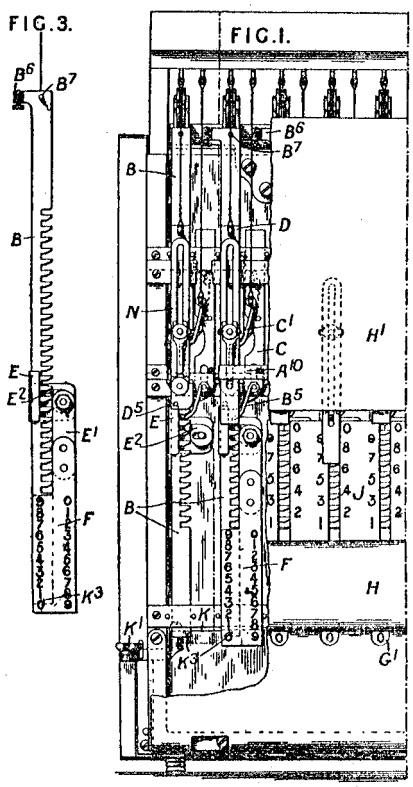

addition and the right-hand for subtraction, the resultant figures of one or other set appearing in the recesses G^1 of a sliding plate H. In operation, a stylus is inserted between the teeth of one of the computing-bars B by the aid of fixed index-plates J, and moved downwards into contact with the cover-plate H. Backward motion is prevented by the pawl B^5, Fig. 8, carried by the frame. Carrying is performed by the tappet B^6 of one bar coming into contact with and driving the weight-controlled suspended tappet-plate C which carries the pawl C^1 engaging the rack of the next higher computing-bar, the slot C^5 in the tappet-plate which engages the pivot of the pawl B^5 allowing motion to the extent of one tooth of the bar only. At the limit of movement of the computing-bar, e.g. when a total 10 is reached, the pin B^7 operates the weight-controlled pawl-releasing bar D, Figs. 4 and 5, shoulders D^6, D^7 of which disengage the pawls B^5, C^1 respectively from the bar B which is then returned to normal position by its controlling-weight. The bar D is held in its releasing position by the friction between its spring D^8 and the bar A^{10} of the frame until it is returned to normal position by the projection E on the computing-bar engaging the pin D^5, but, should a number, say 7, be added to a number, say 5, thus making a total greater than 10, the computing-bar reaches the

© B O B Williams Printed22/11/2023 CalcPatents Ed. 1.doc

Toledo Computing Scale Co 10013/1909 Drum pricer

10,013. Boult, A. J., [*Toledo Computing Scale Co.*]. April 27.

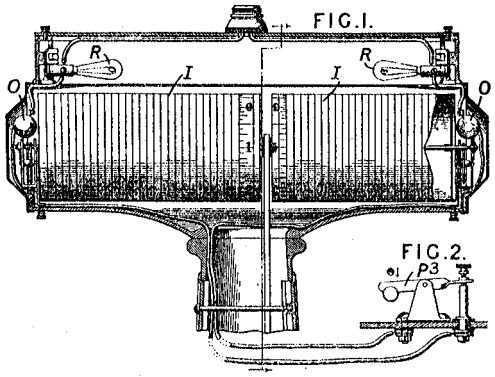

Computing-apparatus.—A weighing and computing scale is provided with means for automatically illuminating the weight and value chart whenever goods are placed on the scale, and at the same time illuminating advertising-matter arranged in the casing. The computing-cylinders I, Fig. 1, are rotated by a rack and pinion connexion from the weighing-beam, and consist of open-ended translucent drums. At the ends of the drums are arranged electric lamps O the circuit through which is adapted to be closed by a balanced switch lever P^3, Fig. 2, situated near, and normally maintained in the open position by, the weighing-beam. The application of a load deflects the beam and allows the switch lever P^3 to close the circuit, thus illuminating the figures on the drums. Magnifying-glasses are arranged in front of the figures. Above the computing-drums is a box-like compartment, the back and front of which consist of removable plates of glass bearing advertisements, and at each end of the compartment is arranged an electric lamp R in series with the lamps O, so that the advertisements

12

Tolton J P 14347/1895 Planimeter for leather

14,347. Tolton, J. P. July 29.

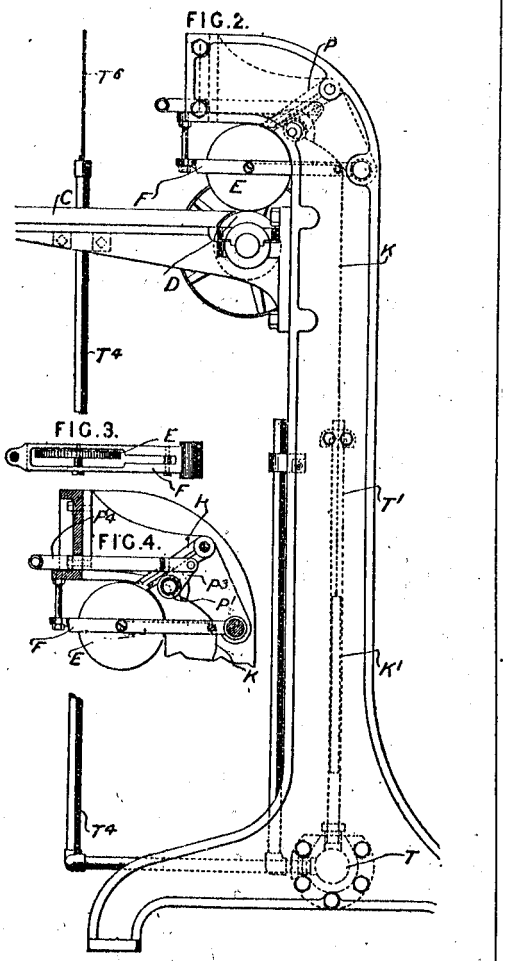

Calculating apparatus.—Relates to a planimeter for showing the area of leather. The leather is drawn over the table C between the roll D and a series of integrating wheels E mounted in pivoted and adjustable frames F. Back-motion is prevented by pawls P which can be simultaneously thrown out of action by an eccentric P^1 operated by crank P^3 and handle bar P^4 when it is desired to zeroise the apparatus. The wheels have coiled on their hubs cords K leading to weights K^1 in a series of tubes T^1 partially filled with liquid and connected to a tank T. T^4 is a tube also connected to the tank and provided with a float carrying a graduated scale T^6. Whenever any wheel is rotated by a portion of the skin passing beneath it, the corresponding weight K^1 is drawn upwards. The movements of all the weights is integrated by the movement of the water level in the tube T^4 and the area is read off from the scale T^6.

Tourtel J M 16374/1908 Adder

16,374. Tourtel, J. M. Aug. 1.

FIG.19.

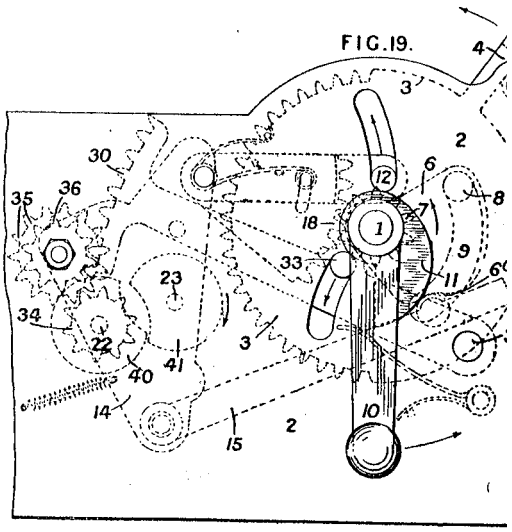

Calculating-apparatus.—Relates to independently-operated adding-machines in which segmental racks are manually set by levers or keys, the counter being subsequently placed in gear with the racks for actuation on the return of the racks by a yoke ; finally, transfer is effected by cams which have been set for operation by the transfer wipers by pins on the counter wheels. The main shaft 1 carries the circular racks 3 having projections 4 for setting them, and carries also a plate 6 provided with a pin or rod 8, which engages slots 9 in the racks. The outer end of the shaft 1 has a handle 10 loosely mounted and carrying a snail cam 11 with which a pin 12, of the spring-controlled rack 18 meshing with the pinion 7, engages. Fixed on the shaft 13 is a cradle 14

d

820

carrying the counter mechanism and a lever 15, the free end of which normally engages the recess 6a of the plate 6. On turning the handle 10, the snail cam 11 lifts the racks 18 and, through the pinion 7, turns the plate 6 and brings up the cradle 14, causing the pin 8 to restore any rack which has been set. The cradle 14 carries four spindles, on which are mounted respectively the counting-wheels 24, transfer cams 25, transfer wipers 26, and zero-izing-wheels 27. Each pinion 24 has a transfer

FIG.1.

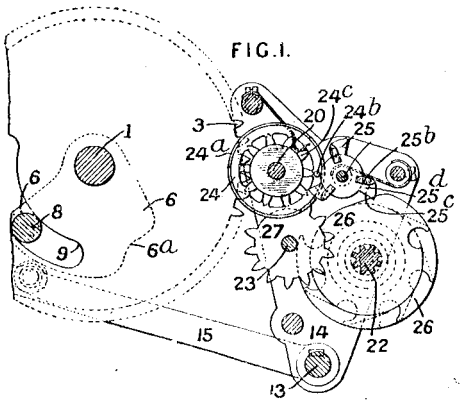

FIG.22.

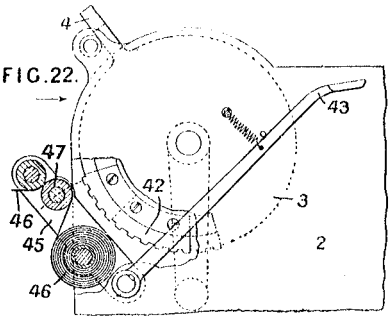

pin 24^b and a recess in one of its teeth 24^c for the purpose of zeroizing. The transfer cam 25 has three projecting parts 25^b and grooves 25^d to permit passage of pin 24^b when the cam 25 rotates; whenever the disk 24^a passes to zero the pin 24^b engages the edge 25^c of the cam and moves it one-third of a rotation. The transfer wiper 26, on being rotated, meets the tooth 25^b and turns the cam another third of a revolution, and the next tooth 25^b is then brought into engagement with the teeth of the adjoining pinion 24 and moves it through one tooth. The shaft 22 is rotated through wheels 34, 35, and 36, by means of a rack 30 provided with a roller 33, projecting through a slot in the casing, adapted to engage the snail 11. To zeroize the counter, the shaft 23 is provided with partly-toothed wheels 27, which, on being rotated, engage the pinion of the index-wheels and rotate them until the zeroizing-wheel reaches the space behind the reduced tooth 24^c. This action sets some or all of the transfer cams, and to subsequently return them to their normal position interlocking-segments 40, 41 are provided; the segment 40 is normally in the path of segment 41 but, on depressing the rack 30, it is brought into position to let the segment 41 freely pass. On turning the zeroizing-handle, the segment 40 remains locked until, on allowing the rack to return, the wipers rotating in the reverse direction set the transfer cams to normal position. The racks 3 carry segmental type plates 42 to print upon paper 46, which passes between feeding and receiving rolls over an impression roller 47, all upon a frame 45 operated by a lever 43. In operating the machine, the racks are set to the required numerals and the handle 10 turned, whereupon the snail 11 moves the rack 18, causing the index-wheels to engage the racks through the action of the lever 15 and plate 6; further movement of the handle causes the pin 8 to bring back the racks and in so doing to actuate the corresponding counter-wheels to an equal extent. The snail 11 then releases the rack 18, which returns the cradle 14, disengaging the racks 3 and index-wheels 24.

Tourtel J M 7722/1909 Adder printer

7722. Tourtel, J. M. March 31. [*Addition to* 16,374/08.]

Adding-apparatus; interlocking.—Incorrect or fraudulent operation of machines of the type described in the parent Specification, is prevented by the provision of a locking-slide which prevents manipulation (1) of the setting-sectors after an item has been printed and before it is added; (2) of the totalizing-counter, by the toothed sectors, when a counter-moving handle has been operated to bring the counter into gear for totalizing, the slide being temporarily disengaged by the zeroizing-handle, and release being subsequently effected by the operating-handle. The printing and operating levers are also interlocked, and means are provided for inking the printing sectors before the platen reaches them, and for effecting transfer while the counter is still in gear. The slide *a*, Fig. 5, is supported in the case and carries a bar *b* which engages the toothed sectors 3. The slide is moved, when the counter-moving handle *c* is operated to move the cradle 14 and bring the counters into gear, by a projection c^1 on the handle pressing against the edge a^1, the same projection operating the cradle by pressing the projection c^2.

Zeroizing-mechanism.—The zeroizing-handle 37 is furnished with a cam *f*, a nose f^1 on which unlocks the slide at the beginning of its movement, by pressing against a projection a^2, a pin *g* on the cam returning the slide by engaging the piece a^3 at the completion of the rotation. The handle 37 has also a dish-shaped flange *d* having a gap at one point; this gap is entered by a pin when the cradle 14 is moved, thereby locking the cradle in gear during the rotation. The slide is unlocked by the operating-handle fixed to the shaft 1, which handle rotates a segmental piece *z* having a nose z^1 to engage a pin a^4 and return the slide.

Operating-means; printing-mechanism.—The printing and operating levers are interlocked by means of a compound bell-crank lever, of which one arm normally rests on the raised part of the cam *p*, Fig. 7, attached to the printing-lever, and another arm is adapted to engage the cam-projection r^1 on the cradle-operating cam *r* on the operating-shaft 1. When the printing-lever is moved, the first arm falls down the face p^1 and brings the other arm out of engagement with the projection r^1. The return of the printing-lever is thus prevented until the operating-handle is turned, whereupon the projection r^1 in its rotation engages an arm on the other side of the bell-crank and re-sets this lever into its original position, freeing the printing-lever, which returns to normal; the operating-handle is locked at the completion of its rotation. A ratchet prevents reverse rotation of the operating-handle. The printing-lever 43 has a limited movement before it raises the carriage 45, and this initial movement turns the plate *k*, which is connected by a pin and slot to the lever and moves the arm k^1 out of its normal engagement with a pin *l* on a plate fixed to the spindle *m* carrying the arm h^1 of the inking-pad *h*. The pad *h* is thereby caused by its spring to ink the type 42, immediately after which the nose *o* of the plate *k* contacts with the pin l^1 and raises the pad out of the path of the platen 47. The printing-lever is normally held in its back position by a spring 49. The plate *k* has a pin k^3, which passes through a slot k^4 and engages with the edge a^5 to lock the sectors by means of the slide *a*, when the printing-lever is operated.

Transfer-mechanism.—To allow transfer to be effected while the counters are in gear, the slots in which the setting-levers work are lengthened at the rear to permit the levers to move one step beyond zero. The movement is normally prevented by a bar *w*, an extension w^2 of which is retained in its normal position by a ring r^2 on the cam *r*. During the latter part of the rotation of the operating-handle, however, this extension is allowed to rise and the bar *w* to fall, thus enabling the levers to move one step back if required by the transfer, the levers being re-set to zero by the final movement, which again brings the cam-ring r^2 into engagement.

599 35 C 2

FIG. 5.

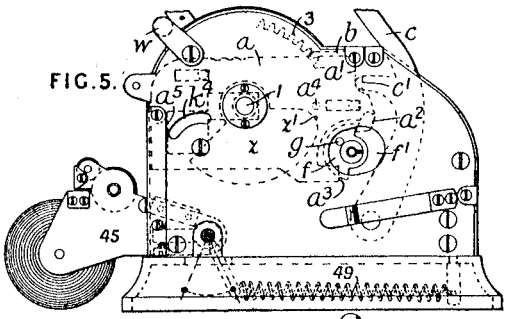

FIG. 6.

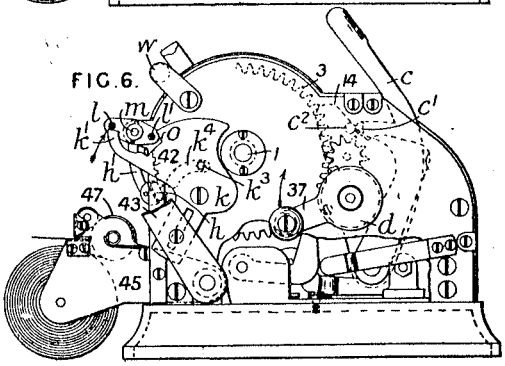

FIG. 7.

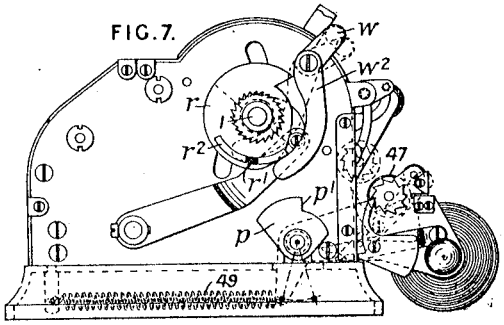

© B O B Williams Printed22/11/2023 CalcPatents Ed. 1.doc

Trant E L 10212/1912 A S correct compass course Bands

10,212. Trant, E. L. April 30.

Adding and subtracting apparatus.—In apparatus for determining the compass course of a ship from the true course, or vice-versa, means are provided for the correction of errors due to the earth's magnetism or variation and to the ship's magnetism or deviation. In one form a continuous band 5, passing over rollers and visible through a slot 2 in the casing 1, is graduated to represent the 360 degrees of a compass card, and is movable relatively to a fixed 'true course' pointer 8. On the front of the casing is marked a variation scale 12 with its zero graduation opposite the pointer 8, and a double pointer 10, 11 is provided to transfer and add variation to the band reading. The pointer 10, 11 is mounted on a cursor 14 which slides in a slot in the side of the casing and is guided in slots 3, 4. The cursor 14 has marked thereon, in fixed relation to the pointer 10, 11, a scale 16 to represent the deviation and this scale is provided with a cursor 17 and pointer 18, 19 whereby the deviation is set, the final compass course being read on the band 5 by the pointer 18. The variation and deviation scales may be differently coloured for east and west graduations. In a modified form the continuous band and scales are replaced by a circular disk and corresponding scales.

FIG. 1.

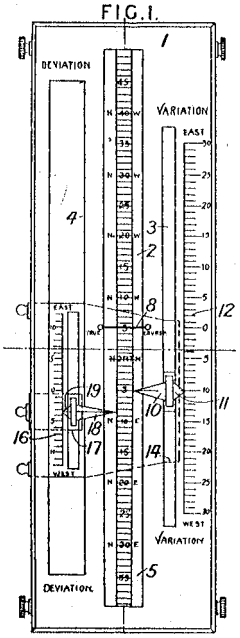

Travis C L 14342/1893 Change indicator

14,342. Travis, C. L. July 25.

Calculating - apparatus.—Relates to a change indicator. The change to be delivered when a dollar, a fifty cent piece, or a twenty-five cent piece is tendered in payment for a less amount is indicated on the dial 33. Thus, if a purchase of 18 cents has been made, the change required for each of the above coins is indicated in the outer circle opposite the number 18 in the second, third, or fourth circles respectively.

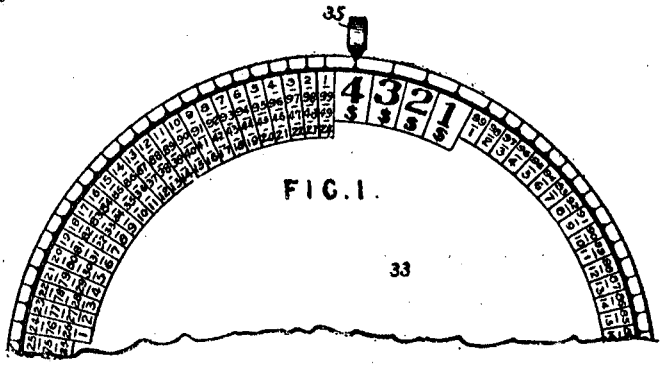

FIG. 1.

Travis C L 1034/1894 Date calculator

1034. Travis, C. L. Jan. 17.

Date indicators and calculating-apparatus.—Consists of a pair of separate endless bands or equivalents upon a frame with pulleys, one band being marked with the numbers from 1 to 365 and the other with the month name and the dates for a year. These, with the aid of an index courser upon the frame, constitute a daily date indicator and a calculator for required dates and intervals.

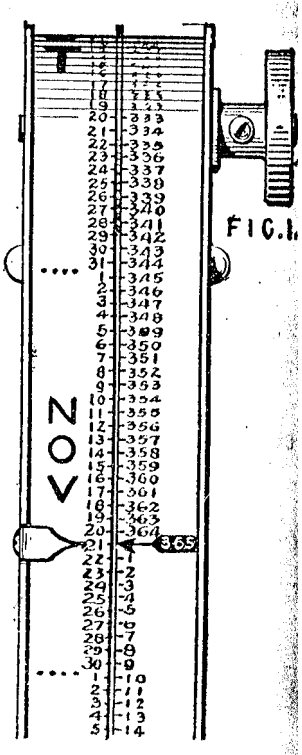

FIG.1.

Tray F H de & Sledding T R 9331/1898 proportional dividers

9331. Tray, F. H. de, and **Sledding, T. R.** April 22.

Calculating-apparatus; caliper and like gauges.—Relates to proportional dividers for calculating. The legs 3, 3 fit into sockets in yokes 7, 7 so as to be slightly adjustable, and are locked by thumb-screws 11, 11. The yokes are carried by segments 1, 2 pivoted at 5 and having graduated edges 6, 6 which engage, as shown in Fig. 3, to allow of a relative sliding movement only. A spring catch 31, snapping into notches in a rack 27, is provided for rough adjustment, the rack itself being movable by a screw 40 for fine adjustment. The short legs 4, 4 are slotted to slide over the pivot 5, and have pointers 21 working over scales 22. They are guided by screws 19 passing through slots 20 and clamped in any required position by nuts 23. The needle points 24 are secured in split tapered holders 25 by forcing the latter into conical sockets in the legs 4, 4. Fig. 9 shows a gauge,

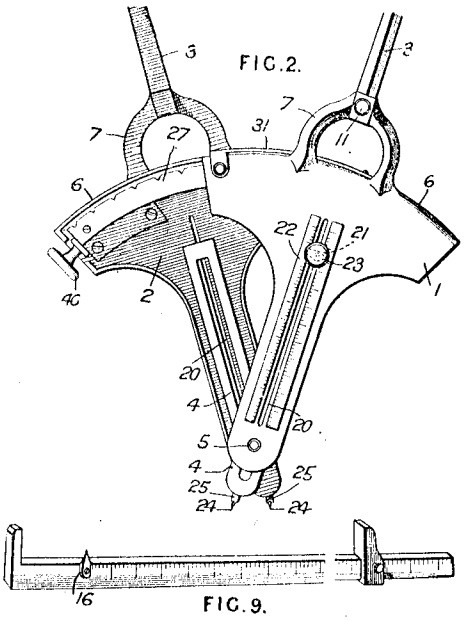

similar in character to a size stick, for facilitating the adjustment of the instrument, the index 16 being placed at the pivot.

Tregoning C 10055/1899 A S Discs

10,055. Tregoning, C. May 12.

Calculating-apparatus.—A disc B revolves on a larger disc A, and each is graduated in the same direction round its periphery with, say, 100 divisions, spaced equiangularly. When any number, say 15, on the inner disc is placed opposite 100 on the outer, the sum of 15 and any other number on the outer disc can be read off on the inner,

while the difference between any greater number on the inner disc and 15 can be read off on the outer. A slot at 19 shows the multiplication table for the number appearing through the aperture 18.

FIG. 1

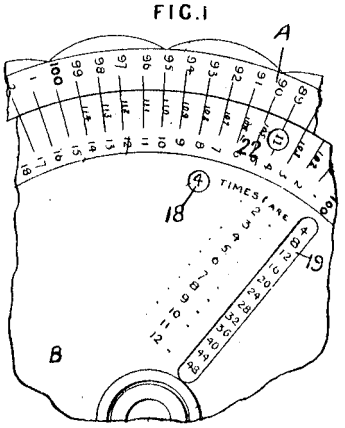

An aperture at 22 discloses the change out of a dollar due on an expenditure in cents given by the adjacent number on the outer disc. In a modified form, the scales are arranged in opposite directions, or the addition and subtraction scales may be arranged on the edges of coaxial discs.

Trinks F 19762/1900 Add print

19,762. Trinks, F. Nov. 3.

Calculating-apparatus.—Relates to the ty calculating and printing apparatus in which a of cam-grooved discs *b*, Fig. 2, are set on dis as to project a given number of teeth position to gear with toothed wheels H by the type-wheels are positioned, and cons various detail mechanisms for ensuring ac working. To ensure that the disc *b* sh exactly in one of its ten determined posit spring bolt *d* is arranged to enter the not any displacement of the bolt causes its ta enter the notch *i* in the fixed shaft E, or o some equivalent locking-means to preve rotation of the disc F. In zeroizing the cc the shaft J is turned, and fingers *p* pick u jections *q* on the wheels K, a pin *s* riding cam *t* drawing the shaft to the right. If the shaft is turned very quickly, the spring *u* cannot draw it back in time, and over-running of the wheels K takes place; this is prevented by a fixed bevelled

FIG. 5.

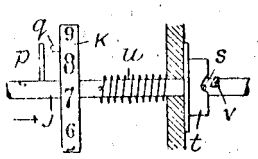

FIG. 21.

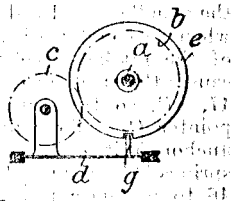

FIG. 2.

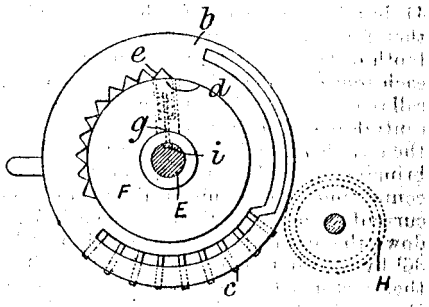

FIG. 15.

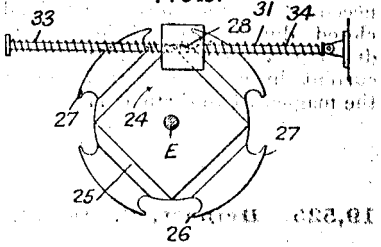

FIG. 18.

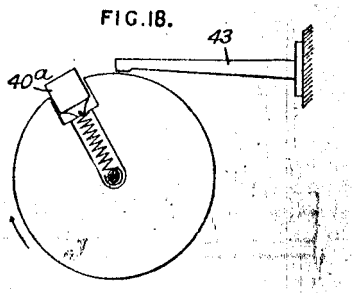

stop *v*, which stops the shaft J and then guides it into the cam notch. The zeroizing must be complete before the machine is again actuated; for this purpose the motor and zeroizing shafts are connected by gapped discs, somewhat similar to a double Geneva stop gear which allows one only to revolve at a time; or each disc may be notched and a rocking detent arranged to engage one when the other is out of normal position. When the numbering-wheels are carried by a slide which is moved to bring them into and out of gear with the motor mechanism, the device first described is so modified that the slide must be in the required

16

Trinks F 21743/1905 Pin wheel for sterling

21,743. Trinks, F. Oct. 25.

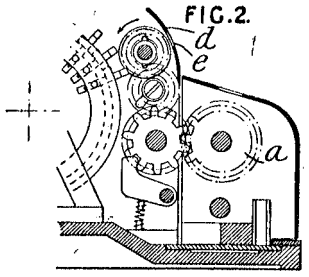

Calculating-apparatus.—In machines preferably of the pin-disk and cam-ring type for adding English monetary values, pence, shillings, and pounds are dealt with in the usual way, but a special hand-operated counting-wheel is provided for the farthings and transfers to the pence wheel of the ordinary totalizing-counter when four farthings have been registered. The farthings' wheel *d* is shown mounted in the main frame of the calculating-machine, above the totalizing-counter *a*, with the pence wheel of which it gears by means of a

65

single-tooth and intermediate wheels. The numbers are viewed through an aperture *e*, and the wheel is set by means of an external wing nut upon its spindle. Preferably, a yielding detent is provided to aline the wheel and render its motion audible, and, when the totalizing-counter is displaced laterally for registration on the pounds' wheels only, a locking-bar upon the movable counter frame may engage and lock some wheel in the farthings' train.

Trinks F 22524/1905 Pin wheel for sterling

22,524. Trinks, F. Nov. 3.

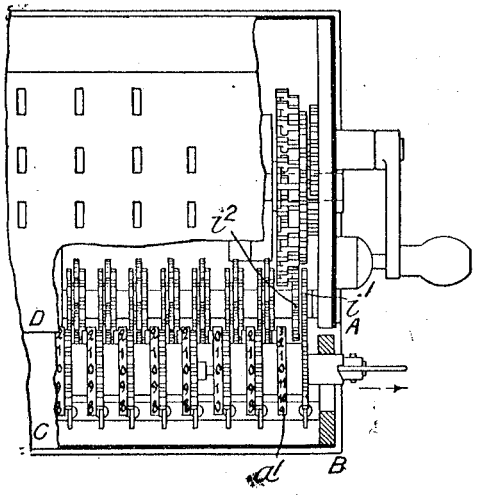

Calculating-apparatus. — In pin-disk and cam-ring adding and multiplying-machines in which the counter wheels as shown are arranged for English monetary values with the pence wheel a^1 upon the right, provision is made for proper engagement when the counter casing A, B, C, D is shifted to the right for the purpose of multiplication and similar operations on higher denominations. All the counter-wheel pinions except that for the pence are ten-toothed, and two alternative intermediate wheels i^1, i^2 are rotated by the right-hand pin-wheel. Of these, the wheel i^1 is smaller and gears with the twelve-toothed pence pinion, whereas the larger wheel i^2 of the same number of teeth is adapted to engage any of the ten-toothed pinions. For other monetary systems, three or more alternative wheels may be provided.

Trinks F 23606/1900 Adder

23,606. Trinks, F. Dec. 24.

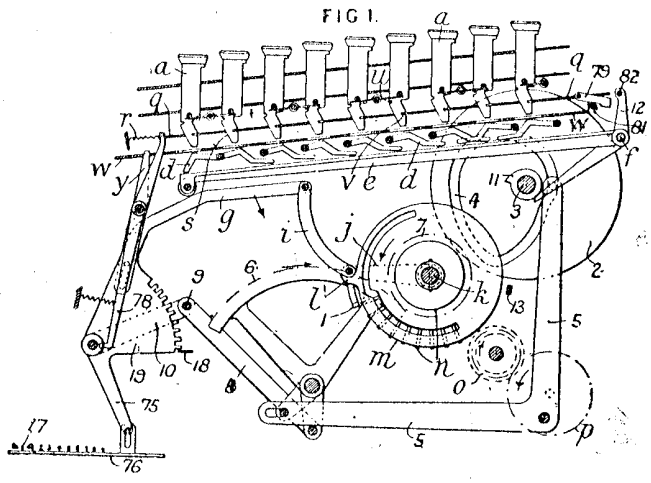

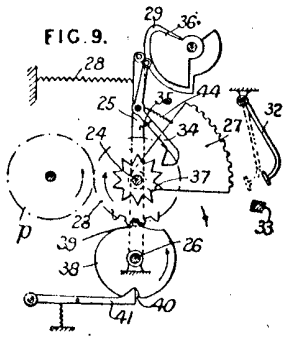

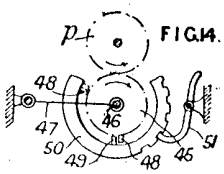

Calculating-apparatus.—In apparatus for registering and adding-up figures, the registration of any numeral is effected by pressing upon the spring-supported keys *a*, Fig. 1, of a keyboard. A lever *d* is arranged below each key, and rests upon a bar *e* turning on a pivot *f* and engaging an elbow lever *g* connected by a rod *i* to a crank *j*. The crank-pin rests on a finger *l* on a grooved cam disc *m*, which, when a key is depressed, displaces a corresponding number of the teeth *n* of a wheel fixed to the shaft *k*. These teeth gear with a toothed wheel *o*, which actuates the registering and adding mechanism through a wheel *p*. Similar arrangements are provided for each row of keys. To prevent the same key, or another of the same series, from being actuated consecutively, the lower end of each key engages an opening in a plate *q* pushed to the right by a spring *r* and to the left by the inclined portion *s* of a depressed key until it engages locking-notches *u* and *v*. To prevent a key from being actuated too far, below each set of keys is arranged a plate *w* having openings and connected by a lever *y* to the elbow lever *g*. A stop 1, connected by a pivoted bar to the crank-pin, is arranged in front of the last tooth *n* not actuated, so as to prevent error due to too great a displacement of the disc *m*. The shaft *k* is operated by a disc 2, on a shaft 3, through a groove 4, a bell-crank lever 5, a toothed segment 6, and a wheel 7 on the shaft *k*. The transmission levers are brought back at the same time by a bar 9 connected to a rod 8 and a lever 10. The keys of each set are liberated by the action of a cam 11 and a bell-crank lever 12 on a catch 79 carried by the plate *q*. The catch 79 rests on a piece 81, and only comes opposite the projection 82 on the lever 12 when the key has been fully actuated. The teeth *n* are withdrawn by the action of a stop 13 on the finger *l*. To allow the same numeral to be registered twice, the rod 8 may be disengaged from the toothed segment 6. The cam 11 may also be disconnected from the shaft 3, to allow the depressed keys to remain depressed. For this purpose, the bosses of the two arrangements may be normally pressed by springs into engagement with sleeves fixed on the corresponding shafts, and disengaged together by a pull-rod attached to a pull-bar. The system of transmission levers may be rendered more rigid by pushing a bar 18 between the teeth of the segment 19, this bar being connected to the pull-bar. The wheel having the teeth *n* carries a small rod pushed by a spring into internal teeth in the disc *m*, as soon as it is liberated from a fixed wedge abutment. The levers *g* &c. are held in their initial positions by a lever 78 engaging a notch in the boss of the lever *g*, against which it is pressed by a spring, and released by the sliding bar *q*. To prevent a key from rising after being partially depressed, a spring-pressed pawl is arranged above the bar *q*, and, immediately after the bar commences to move, the pawl drops into a locking-notch. The bar 12 may be arranged to release this pawl. When the bar *q* is moved by a partially-depressed key, it operates a spring-withdrawn catch, causing it to engage a recess in a disc on the shaft 3 so as to lock it. A bar on the catch-lever is engaged by the end of a horizontal rod connected by a lever to the bar *q* and having a projection sliding up an incline. When the bar *q* is fully actuated, the horizontal bar rises above the catch-lever bar. An arm 75 operates a graduated slide 76 so as to indicate at a sight-hole 77 the numeral registered. To allow a wrong adjustment to be withdrawn, a loose crank on the shaft *k* is connected by a bent rod with a hand-operated rod held in initial position by a spring. When operated, a projection on the crank acts upon a spring latch on the crank *j*, so as to engage the finger *l* and move the teeth *n* back to their initial position. A projection on the operating-bar engages an arm connected by a rod to the lever so as to release the wrongly-depressed key. Each wheel *p* gears with a wheel 23, Fig. 9, loose on an axis 24 carried by a lever 25 oscillated on an axis 26 by a cam 29 and a spring 28. The wheel carries a sector 27 having

428

more text omitted

Trinks F 10872/1901 Control speed of calculator

10,872. Trinks, F. May 25.

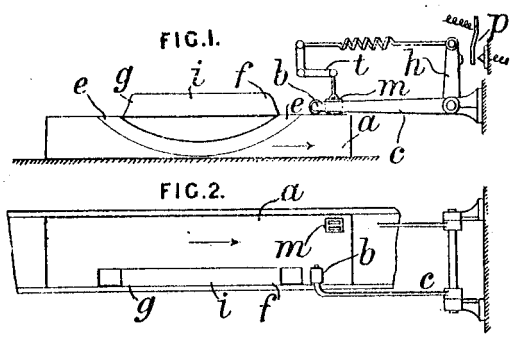

Calculating-apparatus; speed indicators.—Relates to means for controlling the speed of moving parts of calculating and other machines, by the application of a brake when the normal speed is exceeded, and for indicating such excess of speed, by an audible or visible signal, being improvements on certain devices described in Specification No. 19,762, A.D. 1900. The reciprocating part *a* to be controlled is formed with a curved path *e*; under normal conditions a roller *b*, at the end of a lever *c*, engages with and passes along this curved path in the to-and-fro movement of the part. Should the speed exceed the normal, the roller fails to drop into the groove, and, instead, is lifted by the cam *f*, *i*, *g*. This upward movement of the roller turns the lever *c*, *h* and the bell crank *t* and thus applies the brake block *m* to the surface of the part *a*. The movement of the lever *h* also actuates an electric or other signal *p*. The brake and the signal may be used separately or together. The invention is also applicable to rotating parts.

Trinks F 11999/1907 Pin wheel

11,999. Trinks, F. May 23.

Calculating - apparatus. — In apparatus of the pin-wheel and cam-disk type, which is adapted for addition and multiplication and their converse, and in which the totalizing-counter is movable laterally with respect to the adjusting and actuating parts, an endless chain is employed for laterally spacing the single-toothed wheel that is used for registering, upon a set of wheels mounted in the main casing, the multiplier as determined by the rotations of the main handle. As shown in Fig. 1, the main handle 6 is connected by equal gearing to a shaft 9, upon which a single tooth 7 is feathered and adapted to slide equally with but in the opposite direction to the carriage of the totalizing-counter 5, 4, and thus engage in turn with the various wheels 1 which register the multiplier. This is accomplished by mounting the single-tooth in a fork 13, which is shifted by the endless chain 12 attached to the carriage.

FIG. 1.

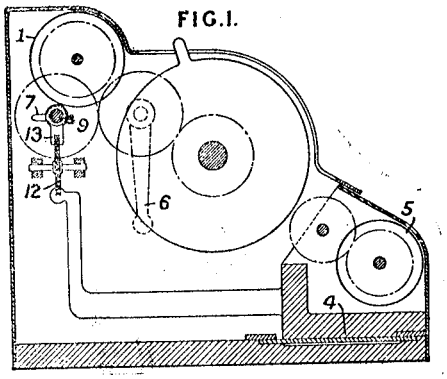

Trinks F 27481/1907 Pin wheel

27,481. Trinks, F. Aug. 19, [*date applied for under Patents Act, 1901*].

FIG.1.

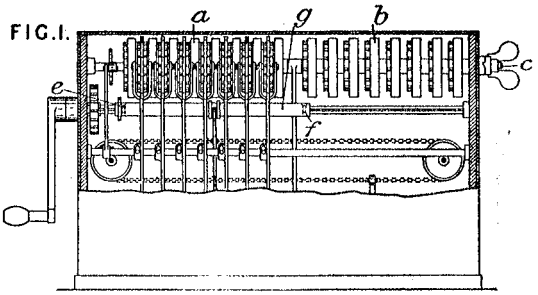

Calculating-apparatus.—In multiplying-apparatus of the pin-disk and cam-ring type, in which the totalizing-counter is movable laterally with respect to the disks, two distinct operation counters *a*, *b* are provided in the fixed casing, the first of which has transfer mechanism to enable it to deal with multiplication by combined addition and subtraction. The actuating-fingers *e*, *f* for these counters are mounted upon the same feathered sleeve *g*, which is upon a shaft rotated once for each rotation of the main handle, and they are displaced laterally step by step with the main counter by means of an endless chain. Transfer mechanism of the type requiring disengagement to allow of actuation is employed, and the disengagement is effected either by an inclined surface travelling with the teeth, or by a cam which rotates with the tooth. The rotation of the operation-counter spindle *c* to zeroize the counter may also throw the transfer parts out of gear.

Trinks F 22435/1908 Pin wheel

22,435. Trinks, F. Oct. 25, 1907, [*date applied for under Section 91 of Patents &c. Act, 1907*].

Calculating-apparatus.—In multiplying-machines

of the pin-wheel and cam-ring type more especially as described in Specification No. 27,481, A.D. 1907, wherein two second-factor indicating mechanisms are employed, one of which serves for addition and

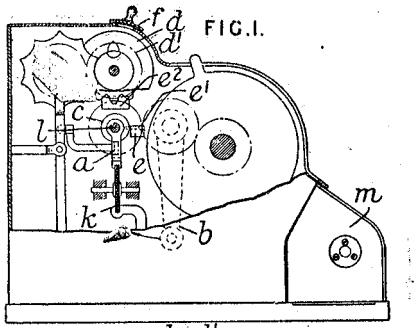

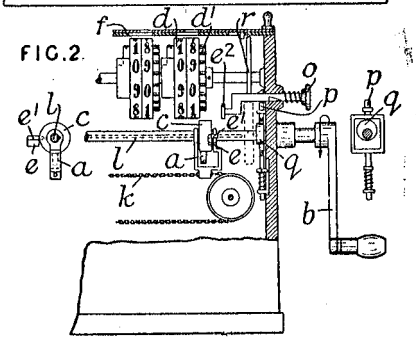

the other for subtraction and for the so-called simplified operations and has its figures upon the disks in reverse order to those of the ordinary mechanism, the zeroes being displaced relatively to each other by the extent of one division, inconvenience is caused by the fact that, when the apertured slide for the two mechanisms is pushed to the subtraction position, a row of nines is disclosed, and to change this to zero an idle operation of the main handle is necessary or also the operation of a zeroizing device upon the indicating-mechanism, and in the former case the addition indicator is falsified. According to the present invention, the laterally moving member carrying the ordinary tooth for actuating the second-factor indicator is provided with a second tooth which comes into operation once only after each setting of the slide for subtraction. The driving-member *c* which is moved along the shaft *l* by an endless chain connected to the totalizing-counter *m*, and is rotated together with the shaft by the main handle *b*, carries not only the ordinary tooth *a* but an additional tooth *e*, which normally passes the teeth d^1 but is rendered operative by an abutment e^2 being pressed by a push-button *o* into the path of the projecting part e^1 of the said tooth. The tooth *e*, when operating, moves the counting-wheels *d* to the zero and then the tooth *a* acts in the usual manner. The button *o* is kept in the depressed position, until the tooth *e* has acted, by means of a bar *p* which springs into a notch in the

© B O B Williams Printed22/11/2023 CalcPatents Ed. 1.doc

Trinks & Schaller 28365/1911 Pin wheel

28,365. Trinks, F., and **Schaller, C.** Dec. 16.

Multiplying and dividing apparatus. — In machines of the pin-wheel and cam-disk type, the counter can be 'split' into two parts by interrupting at a point the transfer-mechanism co-operating between adjacent counting-wheels; this interruption is effected from the outside of the apparatus, and enables one part of the counter to be used for summing a series of products, and the other part for arriving at these products. Two forms are described. In that shown in Fig. 1, transfer at one point is effected by a roller *h* adapted to rock a lever *f* carried by the numeral wheel and to project a radial transfer pin *c*; the pin co-operates in a known manner with a transfer lever *j*. The roller *h* is mounted upon a slide *k* which can be moved to carry the roller out of the path of the lever *f*

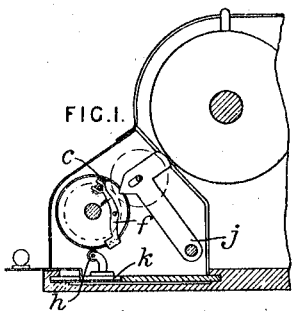

Trinks F 23689/1913 Transfer mechanism

23,689. Trinks, F. Nov. 8, 1912, [*Convention date*].

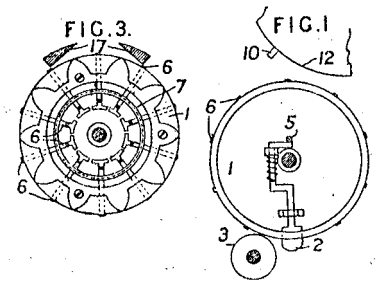

Transfer mechanism for the revolutions-counting mechanism of calculating-apparatus of the

Troger K E 17291/1904 Circular slide rule

17,291. Tröger, K. E. Aug. 8. *Drawings to Specification.*

Slide rules.—Two concentric, rotatable, circular discs have adjacent logarithmic scales on their edges whereby multiplication and division may be performed.

Picture

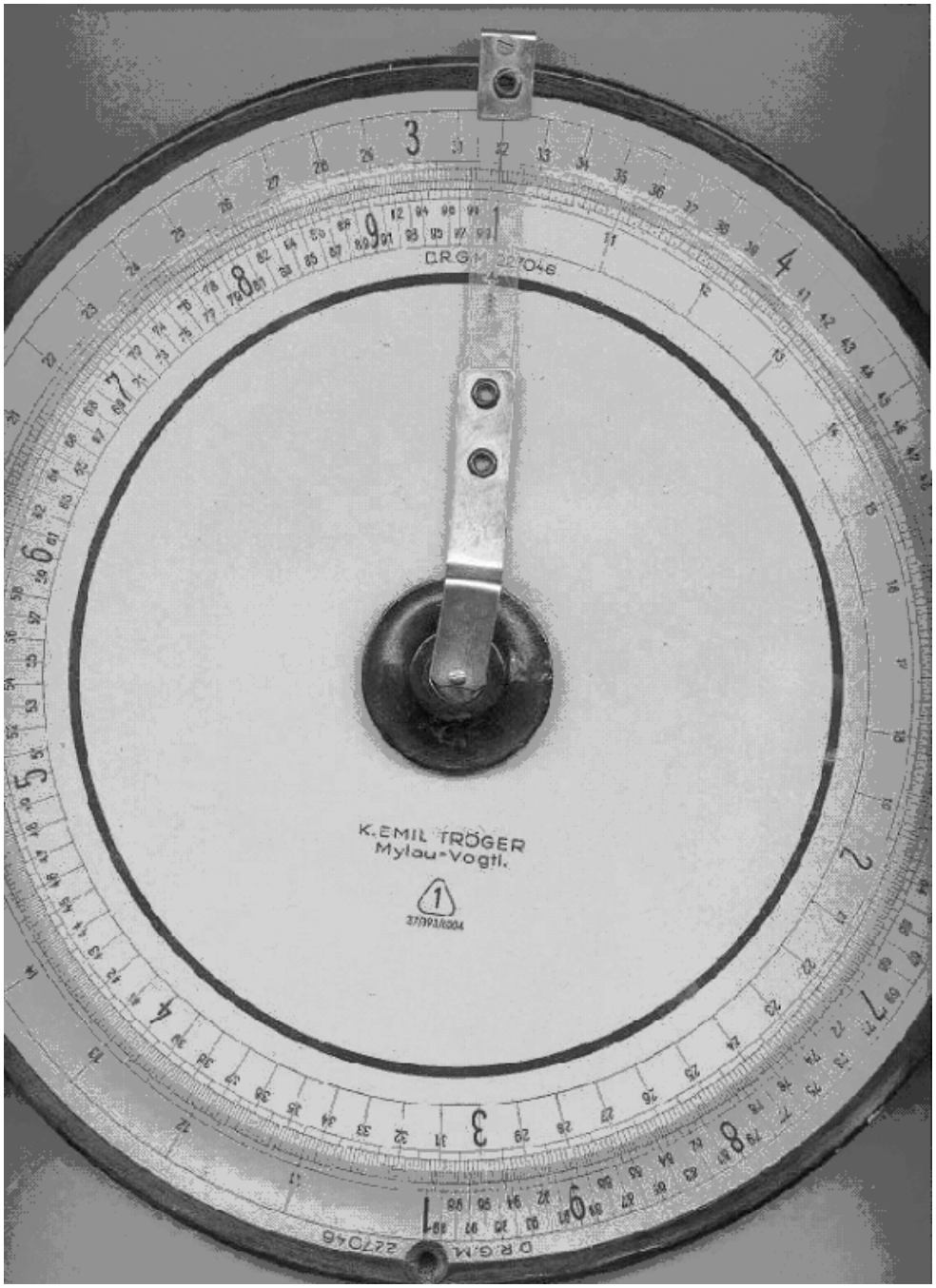

Trotter A P 1210/1885 Wire gauge

1210. Trotter, A. P. Jan. 28.

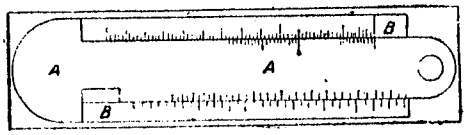

Wire gauges; calculating-apparatus. — A graduated plate A with one end enlarged slides upon a second plate B graduated with a vernier scale. The wire is nipped between the enlarged end of the first and the end of the second plate, and its diameter is then read off on the scales in mils, millimetres, or according to the standard wire-gauge scale. Upon the back of the plate B is marked a scale for giving, in thousandths of a square inch, the areas of circles, of which the diameters are nipped between the ends of the plates, and also for giving the weight and conductivity of copper wire, and other information.

Trotter A P 1302/1890 Slide rule for elec calcs.

1302. Trotter, A. P. Jan. 24.

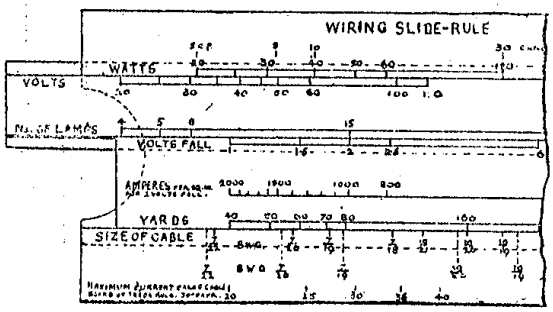

Slide-rules for electric computations. Consists of a frame and two slides, bearing logarithmic scales for solving problems connected with the distribution of electricity.

A poly-slide rule. See[15]

Tucker S J 12598/1884 Percentages by triangles

12,598. Moore, W. S., [*Tucker, S. J.*]. Sept. 19.

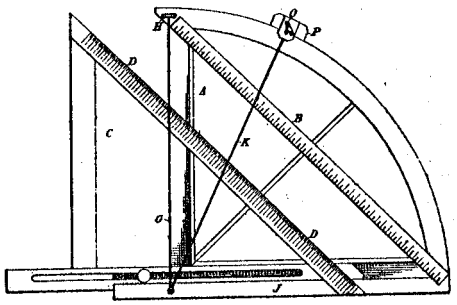

Calculating - apparatus. — An instrument for calculating percentages consists of a fixed triangle A with its hypotenuse B graduated and numbered as a percentage scale. In a slot in the base J slides a second triangle C with its hypotenuse D parallel to B and also graduated and numbered with two sets of numerals. The movable triangle is first slid along the base until the given number on D is intersected by the fixed line G. The index line K is then moved round till it intersects the second number, when it will mark on the scale B the percentage the second number is of the first. To obtain a given percentage, a similar operation is performed.

Turck J A 16273/1901 Adder

see **[30]**

16,273. Lake, H. H., [*Turck, J. A.*]. Aug. 13.

Calculating-apparatus.—The apparatus is made up of any number of the elements of keys, wheels, and intermediate parts shown in Figs. 2, 9, and 11, arranged upon a frame plate 39 and a bar 20, and is contained in a casing composed of a tray 1 and a cover 2, but shafts and tie-rods run through all the frame plates and end in the zeroizing-gear shown in Fig. 14. When the sliding bar 40 is operated by any one of the keys 31, a spur-toothed and cam sector 58 (56 in Fig. 8), in gear with the teeth 46 of the bar, raises a bent arm 62, 65, having a large hole about the shaft of the sector, till a spur-toothed sector 72, 74

71

thereon is in gear with the pinion of the adding-wheels. The first sector then drives the second sector and an integral ratchet sector 80, which in turn drives a similar pair of sectors 83, 86 in gear with indicating-wheels. At the limit of its stroke the key shifts a second sliding bar 47, which applies a stop to the primary ratchet sector, and disengages a pawl 93 from the

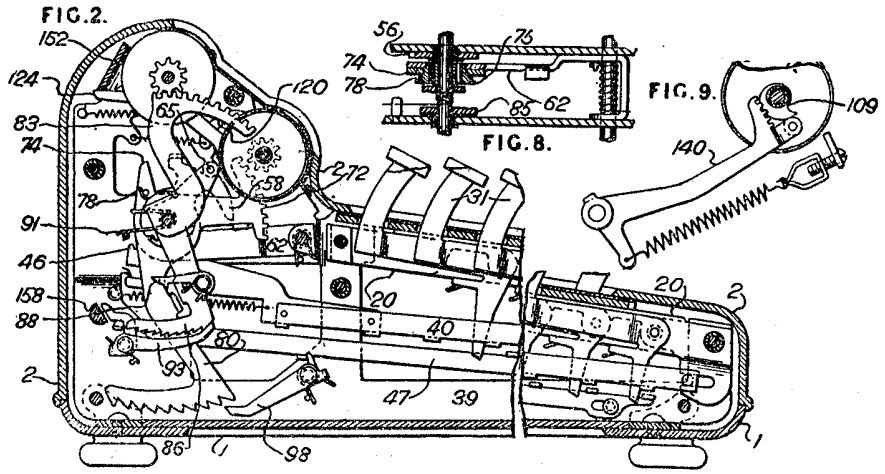

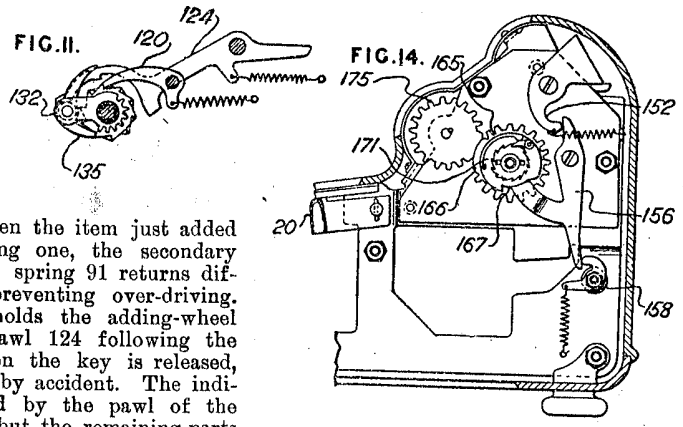

secondary one. Thus, when the item just added is less than the preceding one, the secondary sector being subject to a spring 91 returns differentially, a latch 88 preventing over-driving. A pawl 120, Fig. 11, holds the adding-wheel against reversal, and a pawl 124 following the receding cam sector when the key is released, prevents further advance by accident. The indicating-wheel remains held by the pawl of the secondary ratchet sector, but the remaining parts are returned to zero by springs. The spring 78 for the first spur-toothed sector is coiled round and attached to the large fixed bush 75 in the arm 62 on which it turns. The tens are carried by the mechanism shown in Figs. 9 and 11. The snail 109 on the units wheels allows a spring-pulled toothed lever 140 to turn a ratchet lever 132, driving to the extent of one tooth. In subtraction operations, the pawl 135 of the ratchet lever is disengaged by finger pressure on its tail. The ∩-section and angle ends, Fig. 14, of the bars 20 on which the keys are pivoted impart strength to the structure; a special key lets the indicating-wheels only return to zero; and the mechanism shown in Fig. 14 allows both sets of wheels to be put to zero. In this latter case, the cam 167, which is turned with a ratchet pinion 171 by a button, makes a lever 156 slightly turn a flattened shaft 158 and a bail 152, the former to disengage the pawls 93 of the secondary sector, and the latter to disengage the pawls 124 which prevent further advance of the adding-wheels. The incomplete spur-wheel 165, locking and gearing with an incomplete wheel 175, then gives the shaft of the adding-wheels a revolution, and pawls within them are caught by a groove in it.

© B O B Williams Printed22/11/2023 CalcPatents Ed. 1.doc

Twelvetrees W N 17334/1908 Calc for reinforced concrete

17,334. Twelvetrees, W. N. Aug. 18.

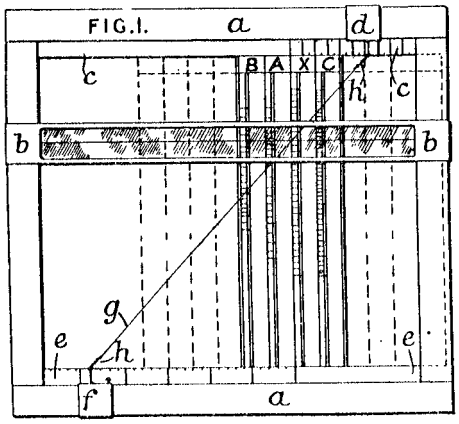

Calculating-apparatus for use in mechanically solving problems connected with the designing of reinforced-concrete beams, slabs, and the like, comprises a pair of scales *c*, *e* which denote compressive and tensile stresses in the concrete above the neutral axis and in the reinforcement respectively, and are oppositely arranged on a frame *a* at right-angles to a scale X graduated to represent relative depths of the neutral axis. The scales *c*, *e* are proportioned in accordance with the ratio of the coefficients of elasticity of the materials employed. In order to ascertain the depth of the neutral axis, a cord *g* attached through springs *h* to cursors *d*, *f* is employed, and when the cursors are correctly placed on the scales *c*, *e*, this cord crosses the scale X at the point representing the position of the neutral axis. In modified forms of the apparatus, the cord is replaced by an index hand pivoted to a block or frame sliding vertically and adjacent to the scale X. In order that other quantities, dependent upon the position of the neutral axis, may be determined from the instrument, additional scales A, B, C, &c. may be arranged as shown, the readings thereon being obtained from the scale X by means of a sliding cursor *b*. These scales may denote, for example, proportionate areas of reinforcement, moments of resistance, &c., and may be modified to suit different types of beams. The Specification gives detailed directions regarding the method of setting-out the various scales. All scales that depend upon the ratio of the coefficients of elasticity may be made removable, so that similar sets of scales based upon different values of this ratio may be substituted when desired.

Tyler F W 26929/1907 Disk for £sd insurance premiums

26,929. Tyler, F. W. Dec. 5.

Calculating - apparatus.—Apparatus which is intended chiefly for the computation of the amounts of insurance premiums payable for odd periods of time, but which may be used also for determining the number of days and weeks between two given dates, the dates of expiry of sums forming part of annual payments, percentages, and fractions of sums of money, consists of a graduated disk *a*, provided with a thumb-piece *a*¹ and rotatable upon a pivot *b* within a fixed annular ring *f*, and a pointer *g*. Starting from the centre, the disk *a* is inscribed with nineteen concentric circles representing shillings from one to nineteen, each circle being divided into parts equal in number to the shillings it represents. Five similarly-graduated concentric circles follow, representing shillings from twenty to a hundred, as shown. Finally, there are circles indicating the proportionate amounts of a premium of £100 for every date in a year, and the number of weeks and days in the year. The fixed circle *f* is graduated so as to indicate the days and months of the year, and the pointer *g* is marked so as to indicate the amount of annual premiums up to £5 on the disk *a*. To calculate, say, the amount payable upon an annual premium of £5 between January 1 and April 30, the disk *a* is turned so that the zero division upon its outermost circle is brought into coincidence with the graduation representing the former date upon the outer fixed circle *f*. The pointer *g* is then turned to the latter date, and the point at which it cuts the 100*s*. or £5 circle gives the amount required.

FIG. 3.

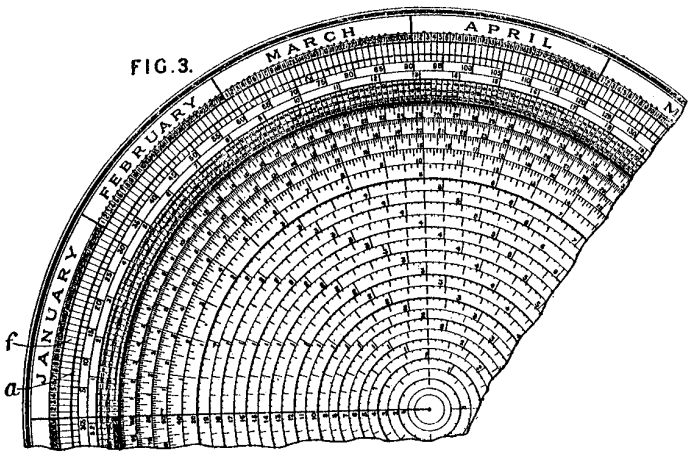

FIG. 1.

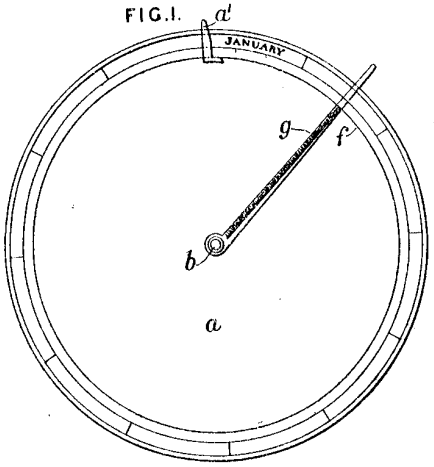

Tyrell J 6038/1830 Teaching arithmetic

A.D. 1830, November 13.—N° 6038.

TYRRELL, JOHN.—"A method of and apparatus for setting "sums for the purpose of teaching some of the rules of

OTHER PHILOSOPHICAL INSTRUMENTS. 97

"On a long strip of parchment or of thick paper I place several "rows of figures, each figure on the second row being directly "under a figure in the first, and so with the third and other rows, "the figures of the top row I number by the numbers one, two, "three, &c. placed at some little distance above them. The "principle of my apparatus is to let only those figures be seen "which will form a sum in the particular rule which I wish to "teach. To effect this I have found it convenient to prepare a "box or frame with a roller at each end, and I attach my strip "of paper or parchment to each roller, so that as it is rolled up "on one it is rolled off the other, leaving a portion of the rows "of figures to be seen between them. Over the face of that "portion I place a card, with apertures cut in it to let the figures "forming the sum be seen, and to let one of the numbers 1, 2, 3, "&c. at the top be seen."

The elementary rules of arithmetic merely require an aperture to be cut suitable to the rule to be taught, and to the position and number of the figures to be seen, but the compound rules require certain figures placed upon the card as well as the figures exposed by the said aperture in the card; appropriate words may be also written upon the cards.

The use of the numbers at the top, placed at some distance above those that are concerned in the sum, is to refer to a book in which the answer is entered to the particular sum exposed by the aperture in the card corresponding to a particular number.

[Printed, 1*s.* 2*d.* Drawings. See London Journal (*Newton's*), vol. 8 (*conjoined series*), p. 430; and Register of Arts and Sciences, vol. 6 (*new series*), p. 100.]

Note that the article in Newton's says this patent is rubbish and should not have been awarded.

Uhlig C E 1657/1889 Multiplier as Napier'sBones.

1657. Hardingham, G. G. M., [*Uhlig, C. E.*]. Jan. 30.

Calculating-apparatus.—In multiplying-apparatus a series of slides *b*, *b* are provided having at the lower end the numbers 0–9 marked for setting up the multiplicand in the apertures *f*, *f*. On the body of each slide is arranged a table of partial products, repeated for each of the cross-slides *g*, *g*. These cross-slides are marked at the end with the numbers 0–9 for setting up the multiplier in the apertures *k*, *k*, and they are provided with apertures *h*, *h* through which the partial products become visible. Thus, in the Figure the products of 2, 6, 4 by the numbers 2, 5, 8 are seen in the corresponding apertures of the various slides. The partial products thus exposed are added diagonally towards the right in rows, and the whole product is obtained. The arrows and telescopic connecting-slides are for the purpose of aiding the operator in correctly taking down the diagonal rows. The slides are provided with teeth underneath and a spring detent to prevent slipping. In a modified form, rollers may be substituted for the slides *b*. These are capable of sliding longitudinally for setting up the multiplicand in a manner similar to that already described. Rack rods, gearing with

FIG. 1.

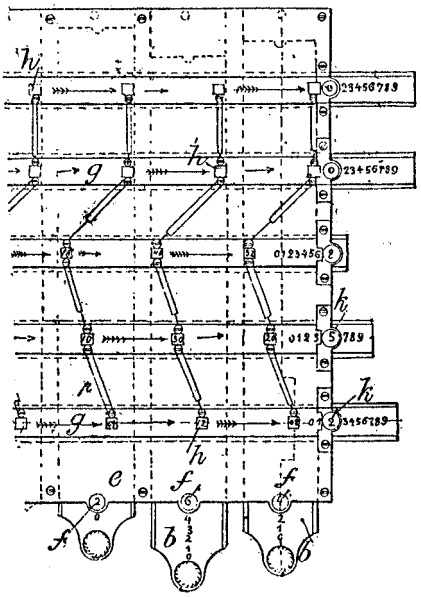

teeth on the spindles of the rollers, take the place of the cross-slides *g*, *g*, and the partial products are shown through fixed apertures in the case.

Union Typewriter Co 17651/1899 Adding type writer

17,651. Fell, J. C., [*Union Typewriter Co.*]. Aug. 31.

Calculating - apparatus. — A type-writing and adding machine for writing words and columns of figures and automatically adding the figures is shown in longitudinal section in Fig. 3. The framework comprises two parallel plates 2, 3, connected by uprights, and two standards attached to the rear part of the plate 3 and connected by rods 6. Upon the plate 2 are feet encircled by rubber sleeves 7 which are longer than the feet. The space between the plates 2, 3 is enclosed by sheet-metal or hard-rubber plates 9 sprung into grooves formed in the plates. The key levers 21 are pivoted upon knife-edges 23, and have projections 20 which enter recesses 19 formed in the enlarged circular ends 17 of the type-bars 11. Each type-bar is formed of two parts 12, 13 hinged together at 14, so as to allow motion of the parts in a direction at right-angles to the plane of the paper, and the circular ends 70 are formed with slots 18 which engage with a shaft 15. Springs 28, attached to the plate 3 and having their free ends bent over the levers 21, normally hold the levers down. The space key levers 30 may be mounted in the same way as the key levers. The types *a*, *b*, *c* are secured to the bars in any suitable way. A frame 31 extends round the series of type-bars and is secured to the guide-bars 32, having rearwardly-projecting arms, which are parallel to each other and form a central guide 35, at the printing-point, for the type-bars. The arms are connected by arms 35[a] and oblique arms 36 to the machine framing. Blocks 39 having inclined surfaces are provided on the parts 12 of the type-bars, and serve to drive adjacent bars into their proper positions within the frame 31, and combs 40, 41, extending between the guide-bars 32, serve as rests and guides for the parts 13 of the type-bars. The types are inked by means of a roller mounted on a vertical axis supported by brackets attached to one of the guide-bars 32. The inking-mechanism may be the same as that described in Specifications No. 9421, A.D. 1886, and No. 9792, A.D. 1887, [*both in Abridgment Class* Printing, Letterpress &c.]. The platen 38 is secured to a spindle 66 mounted in the end pieces 57 of the platen carrier, provided with tie-rods 58, which are attached by means of plates 60 and screws 61, 62 to the upper ends of vertical rods 53, 54 mounted in arms 48, 49 forming part of the paper carriage. A roller 64 mounted upon a bar 63 connecting the rods 53, 54 runs on a rod 65 forming part of the platen-shifting mechanism. The paper carriage comprises a frame 47 provided with guide-rollers which run along the rods 6. Hand-wheels for use in turning the platen are mounted upon the ends of the shaft 66, an accidental return

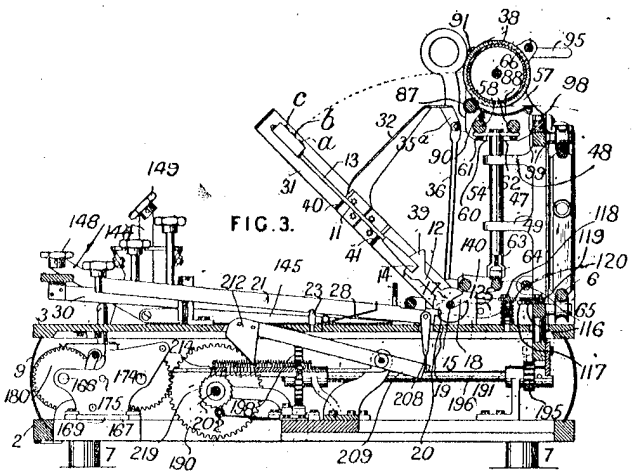

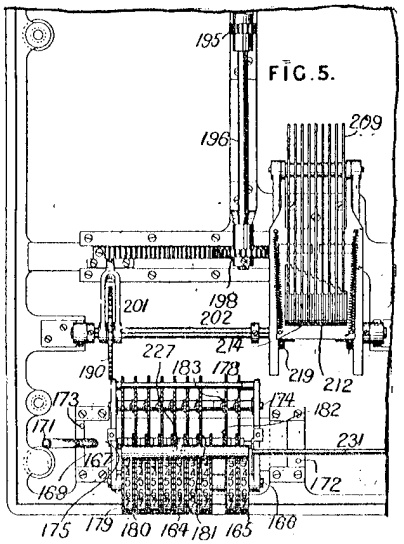

272

Text omitted

Underwood Computing Machine Co 13445/1911 Adder columns typewriter

13,445. Fairweather, W. C., [*Underwood Computing Machine Co.*]. June 6.

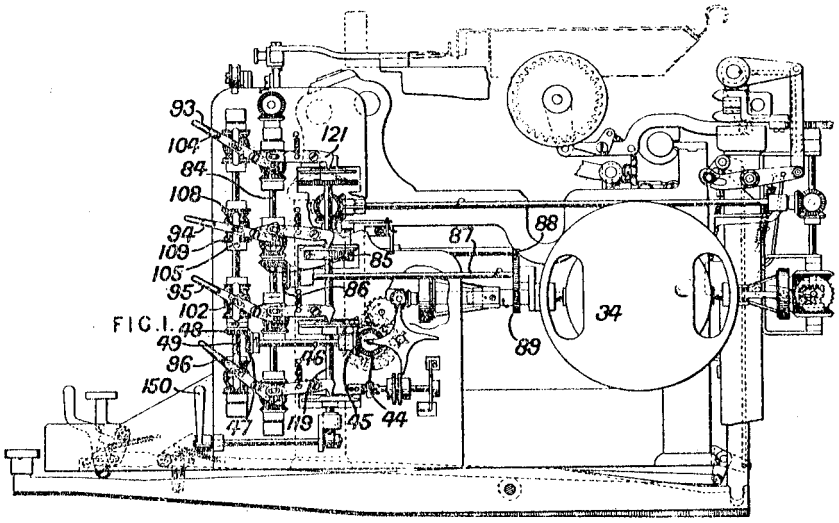

FIG. 1.

Adding and subtracting apparatus; attachments to typewriters.—Typewriters provided with motor-operated mechanism, controlled by the numeral-keys of the typewriter, are adapted to list amounts in various columns, for example, upon a page of a loose-leaf ledger, and to print one or more copies of the listed amounts. The machine, which is adapted to show, for example, the balances of customers' accounts, and the gross daily deposits and withdrawals, is provided with a series of computing-attachments or counters, which may be actuated simultaneously so as to add or subtract the same item, or one or more of the attachments may remain inactive.

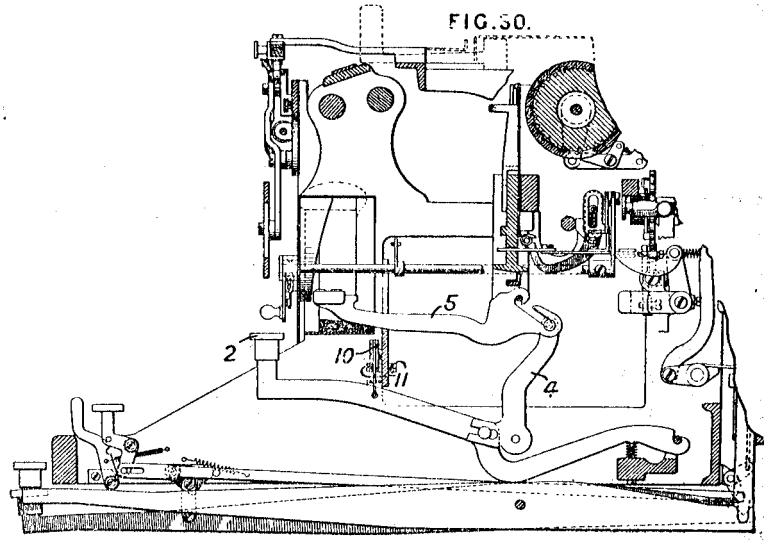

FIG. 50.

242

Underwood Typewriter Co 18937/1909 Add-subtract on typewriter

18,937. Fairweather, W., [*Underwood Typewriter Co.*]. Aug. 17.

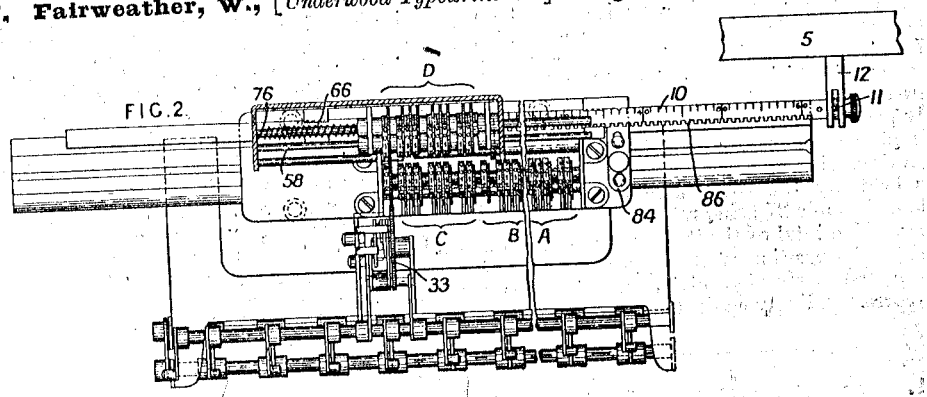

Adding and subtracting apparatus; varying functions of machine.—Calculating-apparatus of the key-set and operated single-bank type for addition and subtraction, and especially adapted for operation by the numeral-keys of a typewriter, is provided with four or more counters, of which two are for totalling vertical columns, and the remaining two are line-total and grand-total counters respectively. Means are provided for adjusting the

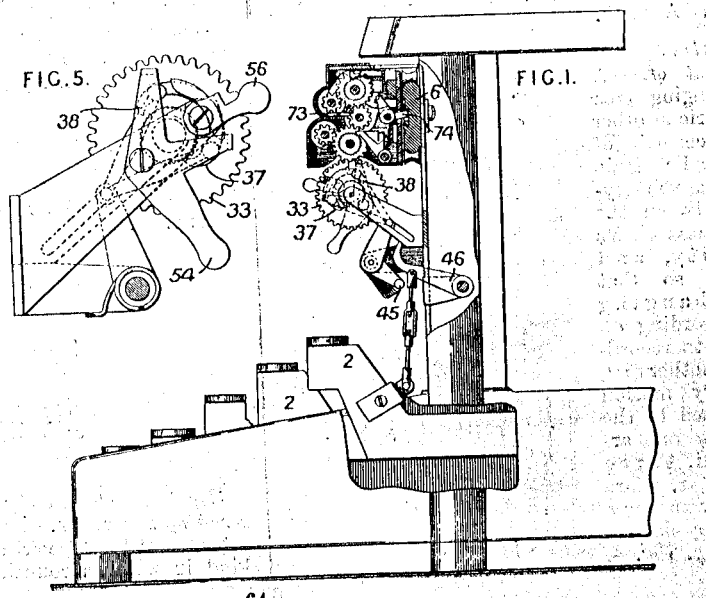

relative positions of the totalizer-carriage and the typewriter-carriage and for connecting these carriages together, for moving the line-total counter so that it is operated by the master actuating-wheel simultaneously with each of the other three counters respectively. The master actuating-wheel 33, Fig. 1, is driven in either direction, for addition and subtraction, from the keys 2 and connexions 46, 45 by the pawls 37, 38, Fig. 5, either of which can be disengaged from the ratchet-wheels by the lever 54, or both can be disabled by the lever 56.

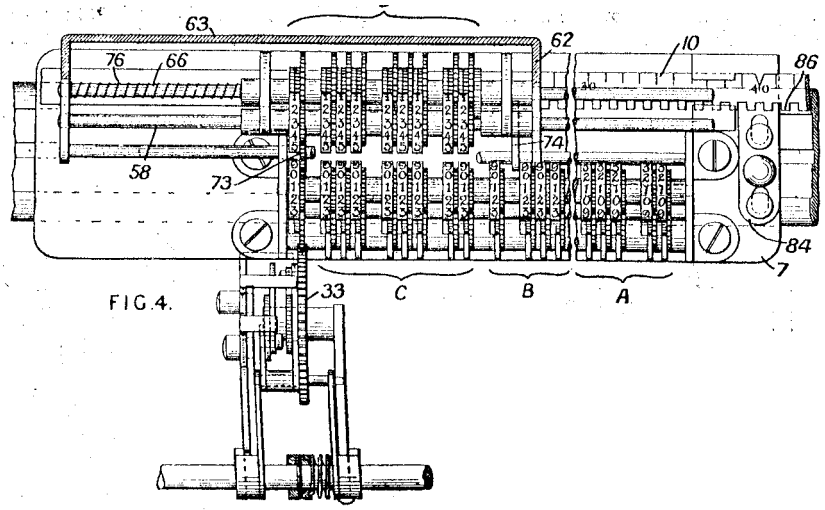

FIG. 4.

Attachments to typewriters; selecting denominations.—The carriage 7, Fig. 4, for the counters is moved step by step along with the typewriter carriage, to which it is connected by means of a latch 84 adapted to engage with any of the teeth 86 of the graduated bar 10, which is, in turn, fastened to the typewriter carriage 5 by a pin-and-slot connexion 11, 12, Fig. 2. The pinions of the column-counters C, B thus engage in turn with the master-wheel 33. As each of these counters moves across the machine, the line-total counter D, which is movable as a whole, with the shafts 58, 66, in its fixed frame 62, 63, moves with it, and by means of an idle wheel 73, which remains fixed in position vertically over the wheel 33, accumulates a line-total. The catches 74, Figs. 1 and 4, by means of one of which the line-total counter is moved simultaneously with each of the counters C, B, A, in turn, are tripped, as soon as any one counter passes the master-wheel 33, by a cam-groove on a plate 6, and the line-total counter is thereupon returned by its spring 76, and by means of a second catch partakes of the movement of the next counter.

Printing totals.—To print a line-total, the typewriter keys corresponding to the total shown on the counter D are depressed in turn, the lever 54 being, however, first set so as to reverse the direction in which the master-wheel 33 is driven. As the keys are depressed in turn, the grand-total counter A, the numerals on the wheel of which are in the reverse order, moves across the wheel 33, the line-total counter D moving, as before, simultaneously therewith and engaging with the idle pinion 73. The line-total counter is thus zeroized, while the line-totals are necessarily accumulated upon the grand-total counter A. The column-totals which appear on the counters C, B, and the grand-total on the counter A, can then be printed by depressing, as before, the proper typewriter keys and manipulating the lever 54, and the counters will be, in turn, returned to zero.

© B O B Williams Printed22/11/2023 CalcPatents Ed. 1.doc

Underwood Typewriter Co 19550/1909 Add in columns on type writer

19,550. Fairweather, W., [*Underwood Typewriter Co.*]. Aug. 25.

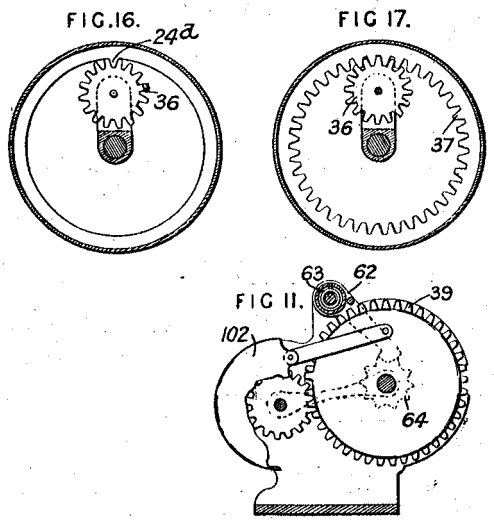

Adding and subtracting apparatus; attachments to typewriters.—Relates to computing-attachments for typewriters adapted to sum both horizontal and vertical columns in book-keeping &c., and to sum simultaneously the results thus obtained, and further to take account of positive and negative items. A number of totalizers are employed, together with a grand totalizer. The machine is of the single-bank, key-actuated type in which the successive denominations are selected by a lateral movement of the master-actuating wheels.

Differential mechanism.—The machine forms a support for the typewriter, the numeral keys of which are connected by suitable links to the differential segments 10 mounted loosely upon a shaft 11, and each adapted to engage one of the nine receiving pinions 16 fast upon a shaft 14, from which the movement is conveyed to the master

67 E 2

United Shoe Machinery Co 11001/1901 Area of fabrics

11,001. Boult, A. J., [*United Shoe Machinery Co.*]. May 28.

Calculating-apparatus in the form of a machine for measuring the area of fabrics. A pair of driven rollers, one of metal and the other of insulating-material, is geared through an electromagnetic clutch 25 to an index hand for a dial 23 and through ordinary gearing to a switch which consists of an arm 18 revolving over a ring of stationary contacts separately wired to fingers 11 between the rollers. The clutch contains two opposing windings, one of which always has current flowing through it while the other receives current through the switch. When no current is so received, the clutch is in action and the index advances. A piece of cloth or leather running through the rolls prevents a greater or less number of currents for each revolution of the switch according to its breadth, and consequently allows the clutch to transmit a greater or less angular motion to the index. As one revolution of the clutch corresponds to a certain short length of the fabric and each contact finger to a strip of definite breadth, the travel of the index integrates the area. The index is returned by hand after

P 11860 49 D

each integration, and the number of pieces measured is recorded by a counter which it operates at starting. The index also drives by continuous gearing another counter which totalizes the areas, and, where the areas are individually read off the dial only to the nearest unit division, in order that the odd fractions may not be integrated by the counter, the gearing includes a friction disc 129 pierced by conical holes so as to be justified by a bevelled pin 135 which the index 24 pushes as it is returned to zero. The construction of the electromagnetic clutch is as follows. A disc 31, which is made up of an iron centre and outer ring separated by a brass ring, revolves with a cup 33 attached to the driving-shaft 20, and intervenes between a stationary annular horse-shoe electromagnet 36 and its armature 30, which is a disc attached to the shaft 29 to be driven. Another disc 41 on the driven shaft is the armature of an opposing larger electromagnet 35. Thus, with a continuous current through the smaller electromagnet, the rotary motion is transmitted when there is no current in the larger one, and is suspended when there is a current in it. The apparatus might comprise several indicators, one to each feeler device and all capable of operation synchronously with the web propeller.

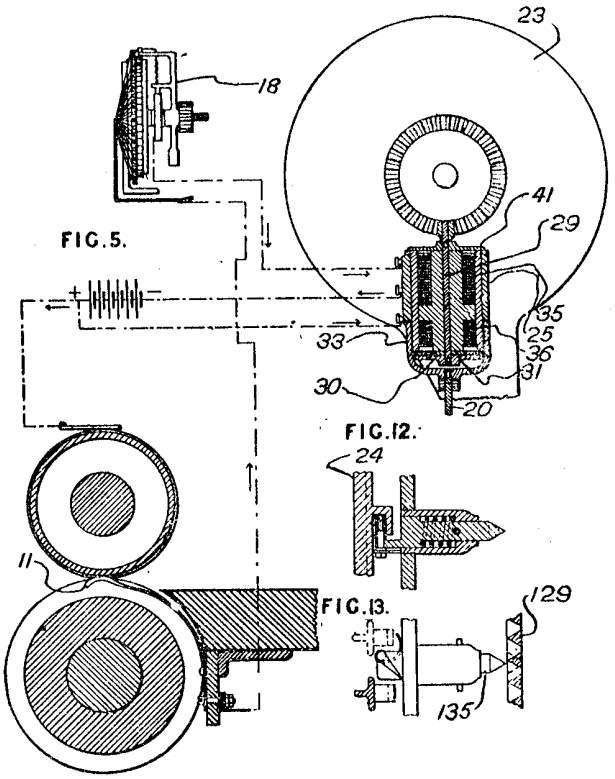

FIG. 5.

FIG. 12.

FIG. 13.

© B O B Williams Printed22/11/2023 CalcPatents Ed. 1.doc

Universal Accountant Machine Co 9588/1903 Adder printer

9588. Justice, P. M., [*Universal Accountant Machine Co.*]. April 28.

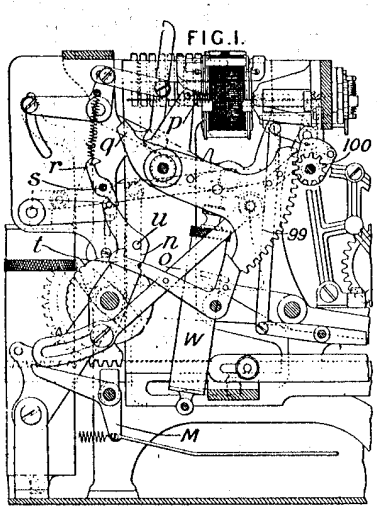

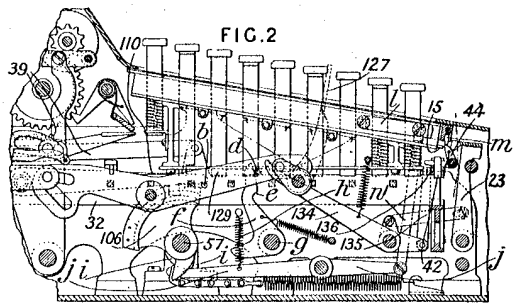

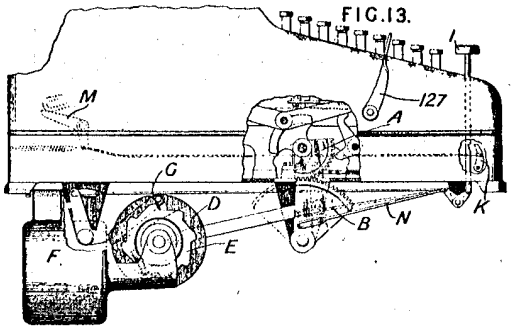

Calculating-apparatus. — Relates more especially to improvements in the machine described in Specification No. 13,316, A.D. 1900, for adding sums of money, and printing each item and the totals of all the items. The objects are to lock the total key in its depressed position, for preventing the elevation of the key after the operating-shaft has started its stroke, to lock the keys to prevent a different example being placed on the keyboard before the completion of the rotation of the operating-shaft, to prevent the setting up of key stops when the total key is manipulated, to print the total in a different colour from the items by a single ribbon, to lock the segment which actuates the transferring-devices until the segment has completed its work, and to provide a motor instead of a handle, whereby, when a motor key is depressed, the motor is connected to the machine to make a complete operation. The rear end of the machine is shown in Fig. 1, the forward end in Fig. 2, and the driving or motor connections are shown in Fig. 13. The different mechanisms in the machine are operated by the rocking of the main shaft 57; forward rocking moves the slide bars 32, which are released upon the depression of a key, forward until they are arrested by the key stops, and reverse rocking causes the pivoted racks 39 carried by the slide bars to engage the gear wheels of the adding-mechanism. The segment 99 actuates the transferring-mechanism. To prevent the total key 127 from being operated after the power shaft has been started, a track extension is arranged on the quadrant 106 to engage the pin *b* on the lever 129. To lock the total key 127 in its depressed position the pin *d* on the lever 129 engages with the shoulder *e* of the spring-pressed lever *f* mounted on the shaft *g*. Release is effected by the quadrant 106 engaging with the arm-piece *h* of the lever *f*, and a spring through the lever 110 then depresses the rear end of the lever 129 and automatically restores the total key, clearing the machine, unless the total key is kept depressed by the operator. The shaft 57 has the projection *i* to engage, in the normal position, with the lever *j*. The lever *j* is connected to the movable frame *l*, which carries the independently-movable spring-pressed fingers *m* co-operating with the sliding plates 15 of the keyboard. If the plates 15 are restored wrongly, the pins *m* drop in advance of the restored plates and prevent their forward movement, on setting up another example on the keyboard, until the power shaft has completed its operation and been returned home, so as to raise the frame *l* and the pins *m* out of the path of the plates 15. The plates 15 are rotated by the rocking frame 23, which is connected by the link n^1 to the pivoted lever 134. The frame 135, carried by the lever 134, has an upper

See Rinsche for 13316/1900

Universal Calculator Co 26925/1898 Printing calc

26,925. Johnson, J. W., [*Universal Calculator Co.*]. Dec. 20.

Calculating-apparatus.—One row only of ordinary keys K, numbered 0–9, is employed, the rack bars BC which operate the counting-wheels and printing-mechanism being mounted in a carriage RC sliding on bars 3, 4 across the machine step-by-step, so as to bring each bar in turn to the

191

"setting" mechanism operated by the keys. The keys at their lower ends carry wedge-shaped projections f, f^1, increasing in size on one side as they diminish on the other, which strike cross-bars r, r^1, and so rock towards one another the levers m, m^1; the latter of these operates a plunger m^4 which, coming in contact with the arm lg of the rack-bar BC immediately in front of it, pushes it forwards until the bar m meets it, the exact "setting" position of the rack being thus determined. The pawl 2, engaging the teeth bt^1, temporarily prevents the rack-bar from being returned by its spring 98. Graduated plates rb, showing through an aperture in the casing, indicate to what numbers the rack-bars have been set. The carriage is moved one step whenever a key is actuated

FIG. 1a

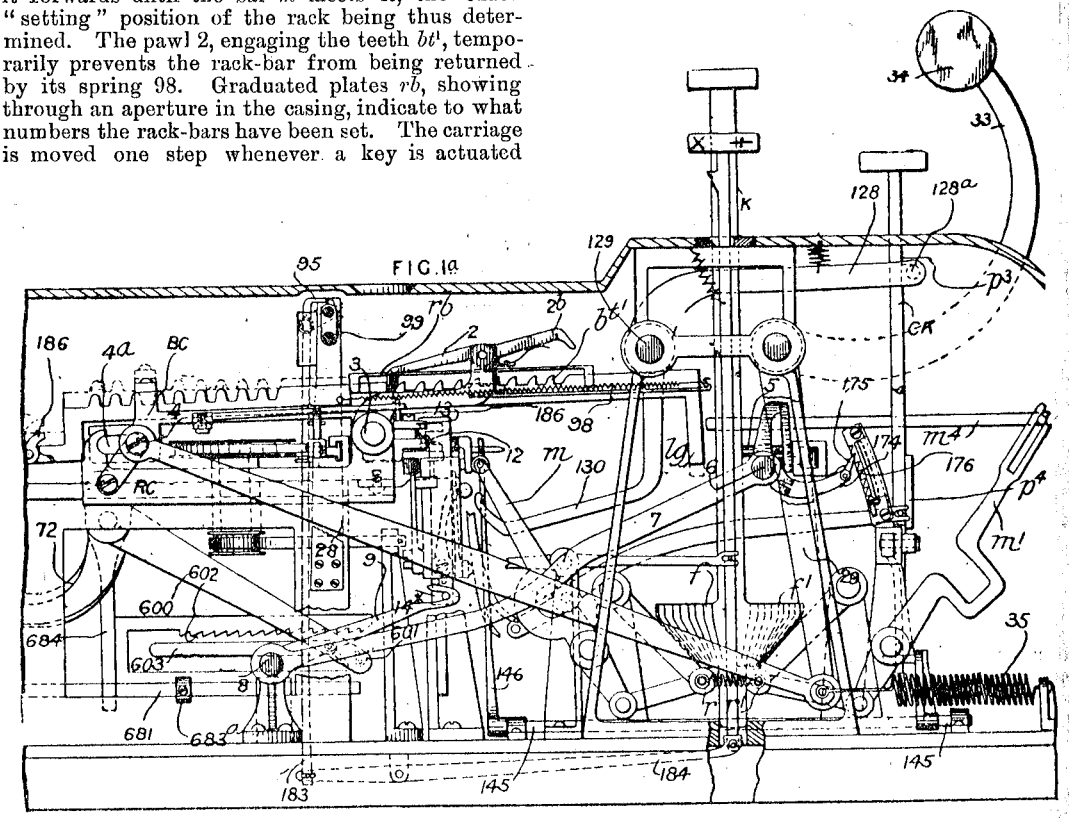

by spring mechanism controlled by an escapement. For this purpose a pin 5 on the key strikes a cross-bar 6, and rocks the levers 7, one at each side of the machine, the shaft 8, and the hooked lever 9, so as to draw down an escapement detent 14^a. On the side of the carriage are two racks 12, 13, the former fixed and the latter capable of one-tooth movement under the action of a spring. When the detent is drawn down it disengages the rack 13 and engages the rack 12, the former at once moving a step. When the key is released the detent rises, again engaging the rack 13, whereupon the whole carriage moves a step, so that the next rack-bar BC is brought into position for "setting." After the apparatus has been completely set, the handle 34 on the operating-lever 33 is forced down and, by means of the crank 29 and link 28, the whole carriage is thrown forwards. The link 28 is connected to a short crank, the pin of which works in a slot 4^a so that, as the carriage moves forwards, it rises and brings the rack-bars into gear with the pinions of the counting-discs (not shown) and turns them the required amounts. In the return stroke, under the action of springs 35, the crank and slot connection allow the rack-bars to drop out of gear before their backward movement commences. As the detent pawls 2 pass under a rocking bar 99 in the return stroke their tails 2^b are depressed, since the movement of the rocking bar is limited in one direction, and the released rack-bars BC spring back to zero position. A spring mechanism, wound up by the actuation of the handle 34, slides the carriage back across the machine to its initial position just as it reaches the end of its return stroke, a special arrangement of controlling-pawls being provided to ensure correct movement. A complete stroke of the handle is ensured by a pawl 601 on an arm 600 of the carriage, which, in the forward stroke, runs over the plate 603 in engagement with the rack 602, but returns below it. A somewhat similar arrangement shown at 174, 175, 176, ensures a complete depression of each key, while, whenever a key is partially depressed, a bar with locking-pins is slid laterally under the pins 5 of all the other keys so as to lock them against depression. The pinions of the counting-wheels are held against rotation, except just at the time required for their movement, by a series of detent arms mounted on an axis which is rocked, to bring them in and out of action, by a crank and bell-crank lever actuated by a cam bar 72,

192

Text omitted

Usill & Browne 4133/1898 Trig demonstrator

4133. Usill, G. W., and **Browne, F. J.** *March 28.*

Calculating-apparatus.—Relates to apparatus for graphically demonstrating trigonometry, and consists in mounting geometrical figures on a base or card, or in a book, so that they will rotate about centres over other figures or diagrams marked on the base &c. The form of apparatus shown in Fig. 1 is actuated mechanically, and shows the variations of the trigonometrical functions of an angle as the angle varies through a right-angle. Equal wheels A, B at the back of a board are geared by a rack D so that they can be turned together by a wheel C to which a key is fitted. The axes of the wheels carry cranks G, G¹, connected by a right-angled piece E, E¹, and the wheel A a radial arm F. As the wheels are rotated, the arm F and the right-angled piece E, E¹, which moves parallel to itself, show, in conjunction with the lines X, Y

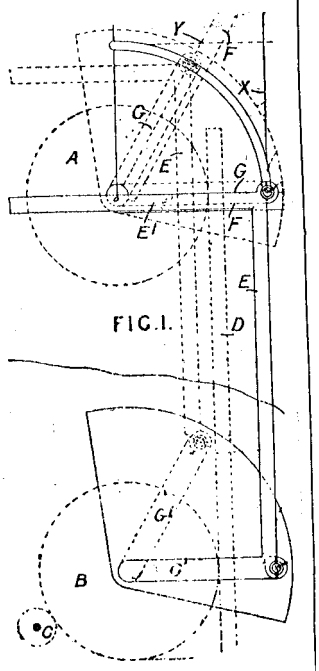

FIG. 1.

1

marked on the board, the variations of the trigonometrical functions. In another modification, a radial arm moves over a quadrant of a circle marked on the board, with tangents drawn at its limiting radii. In a third modification, a celluloid right-angled triangle turns about its right-angle and illustrates the relations between the functions of an angle and its complement.

Vancu E 5300/1909 Tab calc

5300. Vancu, E. March 4.

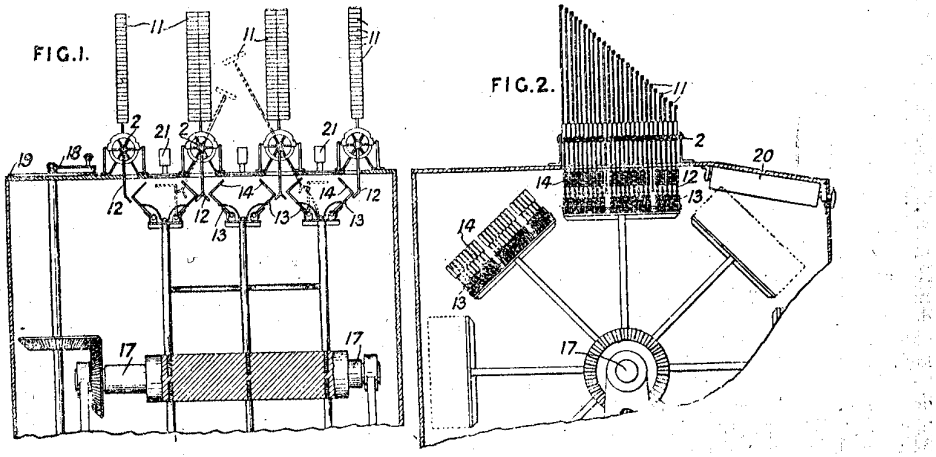

Tabular calculators for computing interest &c., consist of stepped series of pivoted plates 11, Figs. 1 and 2, representing various amounts of capital, which, when displaced, are adapted by means of arms 12 to engage pivoted plates 13, 14, representing the corresponding amounts of interest for a certain time and at a certain rate, and bring them beneath apertures in the casing of the apparatus so that the amount of interest may be read. As shown in Fig. 1, the plates 11 are arranged on four axes 2 in three pairs of rows, and the interest, at a fixed rate shown by a plate 21 for each pair, upon the capital sums represented by a pair of rows of plates 11, is given for various periods from 1 to 8, or more days, by a series of groups of the plates 13, 14 mounted upon a shaft 17. The groups of a series corresponding to a given rate are symmetrically arranged about the shaft 17, in the same transverse plane, and any group of a series can be positioned beneath its row of 'capital' plates, so as to be actuated by the arms 12, Fig. 3, thereof by means of an index arm 18 and perforated index plate 19. The method of mounting the plates 11 upon the axes 2 is shown in Fig. 3. A strip of paper 20, Fig. 2, may be provided, upon which the amounts of interest shown by the plates 13, 14 may be added.

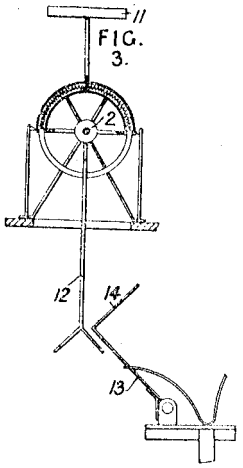

22

Vaughan M 15349/1912 spherical trig plotter

15,349. Vaughan, M. July 1.

Spherical-trigonometry calculators, arranged for computing by plotting.—A device to be used in obtaining the correction to be applied to a ship's dead-reckoning position to give the position as deduced from a single observed altitude according to the position-line method comprises a board A within which is rotatably mounted a disk B divided into quadrants. Each of the two upper quadrants is graduated in degrees, and each of the two lower ones is provided with a scale *l* so constructed that from it the meridional difference corresponding to any given latitude difference may be obtained, in order that the latitude difference may be set off correctly on a Mercator's chart. If θ be the angle between the horizontal line and the radius to the graduation *n* on the scale *l*, then Sin $\theta = \frac{1}{2}$ Cos *n*. Each of

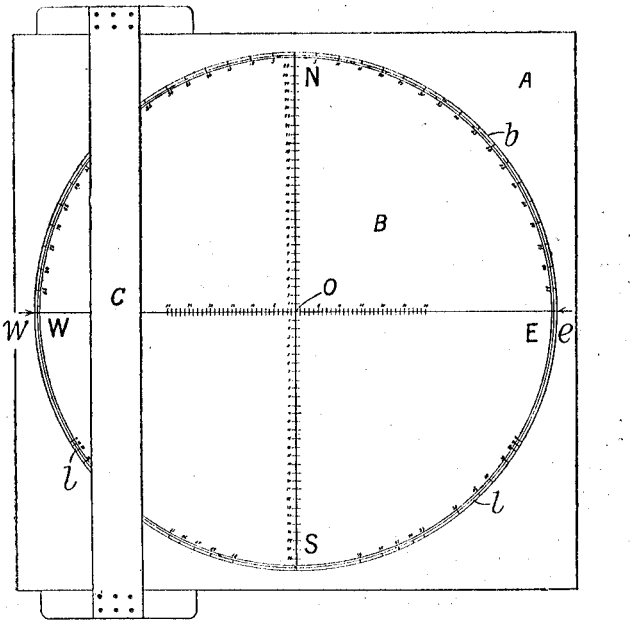

Venturino M E 1623/1915 Tab calc angles artillery

23. Venturino, M. E. Feb. 18.

FIG. 3.

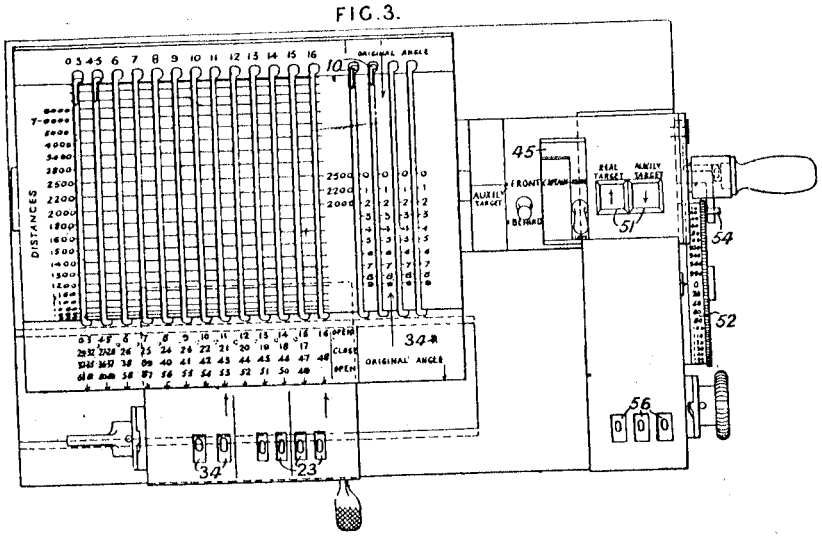

Multiplying-apparatus; plane-trigonometry calculators. — For calculating the angle subtended by the base of a triangle, when another side and the included angle are given, a table is prepared for the angle subtended by a unit base for variations in the given quantities, and this table is reproduced in a calculating-machine, which gives approximately the subtended angle required by multiplying the unit-base angle by the length of the base. The invention is particularly applicable to gun-laying, and the angles are given in millièmes (6400 equal to 90 degrees). The gun is stationed at the point B, Fig. 1, and the target A is invisible from B, but is visible from a point C, and a point D, referred to as the auxiliary target, is visible from both B and C. The angle δ is required to be calculated, and this is effected by calculating the angles α and β and measuring θ and ϕ, and then adding or subtracting according to the relative positions of the points A, B, C, D. The calculating-machine is of the cam-disk and pin-wheel type of repeated-addition multiplying-machine, and the angles θ or ϕ are set up on the top, Fig. 3, the distances y or z being set out on the side; the operation of the levers 10 projects pins 13, Fig. 5, on the wheels 8, and on operating the handle 4 n times, if the length of the base is n units, an angle approximately equal to α or β is communicated to the register 23 through a spur-gear train and is thus added to or subtracted from the original setting, according to the direction in which the handle is turned. The

FIG 1.

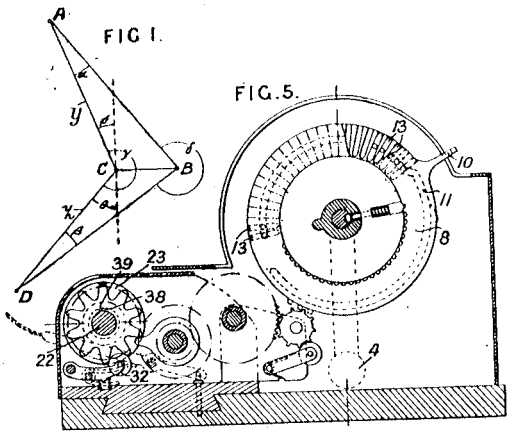

shown on the right-hand side. An indicator 51 for the required direction of movement of the handle is formed by a sleeve 45 which is set according to the relative positions of the points A, B, C, D. A register 56 for the number of operations of the main handle is provided, and a wheel 52, moved one step at each revolution of the main handle, carries a stop 54, which is set to prevent further rotation in either direction when the required number of revolutions has been made. For calculating differences in the angle δ for small distances apart of the guns of a battery, taken as the unit for which the machine is constructed, a table of numbers is provided in the front of

Venturino M E 24833/1914 Plane trig

24,833. Venturino, M. E. Dec. 31.

Plane-trigonometry calculators. — Relates to triangle-solving apparatus of the kind in which the triangle is mechanically reproduced to scale. A semicircular sector A graduated in angles has a base-member B provided with a slot *b* for a slide C to which is pivoted by a thumb-screw *h* a graduated arm H. A similar pivot E for a second graduated arm F is held by means of a thumb-screw *e* engaging a slot D in the slide, the base of the triangle being set by means of a scale upon the base. To set the base angles, each pivot is brought in turn to the centre of the semicircle, the longer arm having a pointer L riding in a slot to enable this to be done. The triangle thus determined is finally secured by means of a thumb-screw *j* engaging the slot in each arm, and the angle at the apex may be measured by means of a scale K.

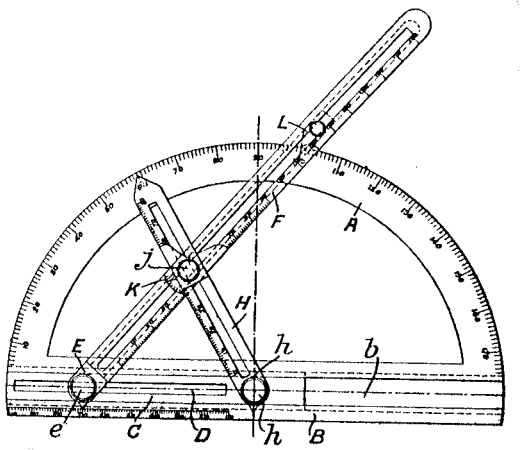

Vermehren J 13817/1900 ASMD

13,817. Vermehren, J. Aug. 1.

Calculating-apparatus.—In a machine for multiplying, dividing, squaring, &c., and calculating by means

37

of logarithms, discs a and a^1, operating counters t and t^1 and mounted upon screw-threaded or longitudinally-adjustable spindles c and c^1, engage friction discs b and b^1 on spindles d and d^1, which

FIG. 1.

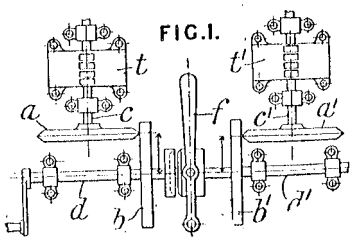

may be operated separately or connected by a clutch operated by a handle f. The spindles c and c^1 may be stationary, and the discs a and a^1 form nuts which are connected to the counting-mechanism. In performing logarithmic calculations, additional counters are connected to the discs b and b^1. The discs a and a^1 may have projections, while the discs b and b^1 have recesses, or *vice versâ*. Cones may be used in place of the discs b and b^1, and in one case a ring, embracing a cone, is used instead of a disc a. The spindles c and c^1 may carry two or more discs, so that, when one passes off its friction disc or cone, another comes into action.

Vermehren J 2172/1904 Multiply by cones

2172. Vermehren, J. Jan. 28.

Calculating-apparatus.—Discs operating counting-wheels are driven by contact with a cone, and can be adjusted in position along the cone so that the numbers registered bear a constant proportion, as required in the operations of multiplication and division. The cone a is driven by a handle b and has frictional contact with two or more discs l, l^1, each mounted with its set of counting-wheels on spindles k, k^1, carried in frames i, i^1, which travel on nuts along the screws d, d^1. By rotating these screws, the discs can be set at the requisite distances r, r^1 from the apex of the cone, such distances being read off upon scales p, p^1 by pointers o, o^1, while other pointers n, n^1 indicate the corresponding readings obtained on the counting-wheels when the cone is rotated.

FIG. 2.

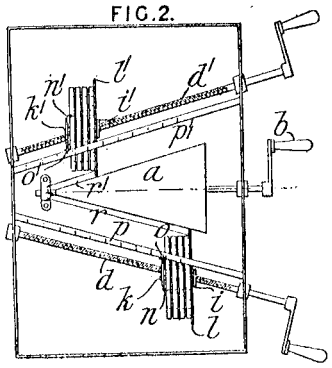

Vermehren J 23241/1906 Adder

23,241. Aktieselskabet Vermehrens Regnemaskiner, and **Vermehren, J.** Oct. 19.

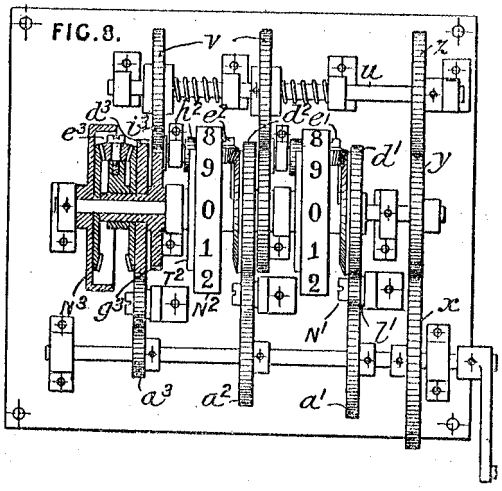

Calculating-apparatus; counting-apparatus.—Relates to calculating-machines of the type in which the number to be added is set up and then registered on all the numeral wheels simultaneously, and in which the tens are carried at the same time as the numbers are registered on the numeral wheels, and consists in providing means for taking up the lost motion which occurs between the gear-wheels of the transfer mechanism.

The following known transfer mechanism is described; the wheels a^1, a^2, a^3, of diameters corresponding to the digits set up, are operated by a handle and set up the number on the numeral wheels N^1, N^2, N^3, &c. through the gear-wheels l^1 &c. and d^1 &c., the wheels d^1, N^1 being provided with crown-wheels connected by planet pinions e^1 which are carried by arms attached to hubs rotating on the counter spindle. These hubs pass through the wheels d^1 &c., and are connected to toothed wheels g^3 &c. An arrangement is described in which the wheels a^1 &c. are of equal size, each having a secondary wheel of equal sizes, slidably feathered on the same shaft and adapted to be put in gear with any of nine toothed rings on a rotatable cone. When a "ten" is to be transferred from the wheel N^2 to N^3, say, a disk T^2 attached to the wheel N^2 turns the wheel h^2 through a quarter of a revolution by a Geneva gear. This causes the wheel g^3 to be turned through one-twentieth of a revolution by the wheel i^3. Thus, a tenth of a revolution is transmitted to the numeral wheel N^3 in addition to that caused by the wheel d^3. It is found that with several numeral wheels, the accumulated lost motion prevents accurate transferring of the tens right along the series. In one arrangement for taking up this lost motion, the wheels v are put in gear with the wheels g^3 &c., and are frictionally mounted between spring-pressed disks on the shaft u. The shaft u is turned by the handle through wheels x, y, z, the gearing being such as to tend to give the wheels v double the peripheral velocity of that of the wheels g. Hence all lost motion is taken up. In modified arrangements, the wheels x, y, z may be absent, and the wheels v may be spring or weight controlled; or the wheels v may be directly applied to the wheels N^1; or the wheels v may be dispensed with, and the counter spindle geared through wheels x, y to revolve more quickly than the numeral wheels, and thus exert a frictional turning-moment on them.

Vermehren J 13039/1909 Mult Divide

13,039. Aktieselskabet Vermehrens Regnemaskiner, and **Vermehren, J.** June 3.

Multiplying and dividing apparatus.—Apparatus for calculating in one set of operations fractional parts of any quantity comprises a series of denominational sets of toothed disks which are adapted to actuate two counters directly when it is desired (1) to evaluate expressions of the form $a \times \frac{b}{c}$, two further sets of disks being, however, provided between each of the actuating sets referred to and the counters when it is desired (2) to evaluate expressions of the form $a \times \frac{b}{c} \times \frac{d}{e}$. Corresponding to the units, tens, &c. denominations respectively, are sets of disks *a*, Figs. 1 and 2, each disk being provided with a ring of pins *b*, only a few of which are shown for each disk. For each set of disks, a pair of toothed receiving-wheels *c*, mounted upon separate shafts *d*, is provided, and adapted to be set by means of handles *e* so as to engage any two of the disks of the set. The left-hand receiving-wheels *c*, shown in Fig. 2, are connected through clutches *h*, *g* with registering-mechanism *l*, and the right-hand wheels *c* are connected by means of similar clutches to another registering-mechanism, not shown. The wheels *c*, being set by the aid of the scales shown in Fig. 1, in engagement with two selected disks corresponding to digits of the numerator and the denominator respectively, and the handle *p* being rotated until a given number is shown by one of the registering-mechanisms: the other registering-mechanism indicates a fractional part of the number, the numerator of the fraction being composed of the digits at which the wheels *c* of the second registering-mechanism are set, and the denominator of the digits at which the wheels *c* of the first registering-mechanism are set. The actuating-mechanism can be shifted across the machine so as to engage successively with the registering-mechanism by means of a crank, not shown. [Fig. 4 shows the apparatus adapted to evaluate expressions of the form $a \times \frac{b}{c} \times \frac{d}{e}$, two further sets of disks *r*, and two further receiving-wheels *s*, being provided between each actuating-set *a* and the registering-mechanism.

FIG. 1.

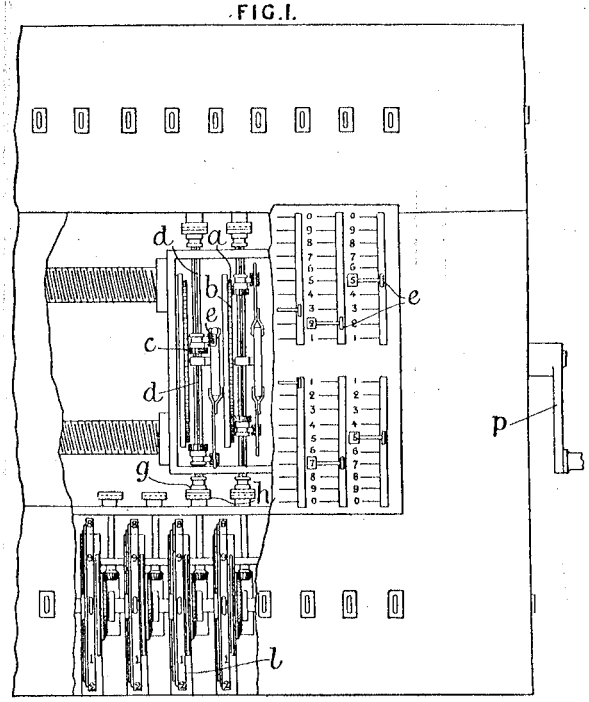

FIG. 2.

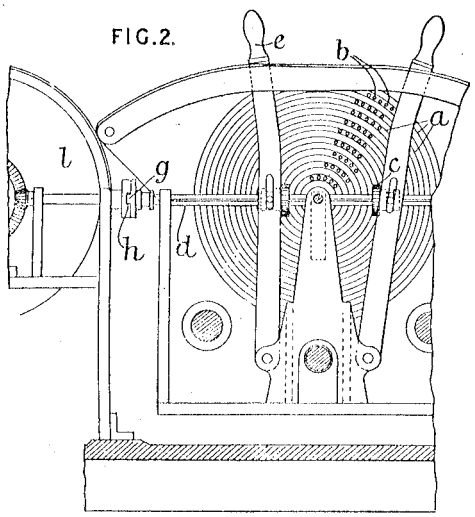

FIG. 4.

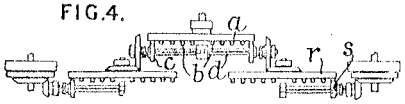

Vermehren J 14562/1912 Multiply

14,562. Vermehren, J., and **Aktieselskabet Vermehrens Regnemackiner.** June 21.

Multiplying-apparatus.—The action of setting the multiplicand and multiplier positions pairs of rollers provided with cams corresponding to the units and tens respectively of each denominational product, so that certain pivoted rods or bars are selected by the cams and their free ends brought into alinement: the selected bars thus virtually form teeth, such as those of a rack, and the teeth are summed by receiving-wheels mounted upon a travelling carriage which is moved across the machine at each operation. One "group" of the machine is shown in Fig. 3, and is sufficient to permit the multiplication of a four-figure multiplicand by one of the figures of the multiplier. When the multiplicand is set simultaneously on each of the three groups, A, B, C, Fig. 1, by means of slides *m* and pointers *n*, cam-shafts *k* are rotated and each one thrusts to the right a selected pair of rollers so that their bevel driving-wheel *i* engages with the corresponding

wheel *o* on the shaft *p*. The digits of the multiplier are then set by means of the three slides *s* and pointers *t*; the shafts *p* are thereby rotated and turn the selected pair of rollers, so that the cams thereon select as many pivoted rods *a*, Fig. 3, as correspond to each partial denominational product, and push them by means of projections *v*, so that the lower ends

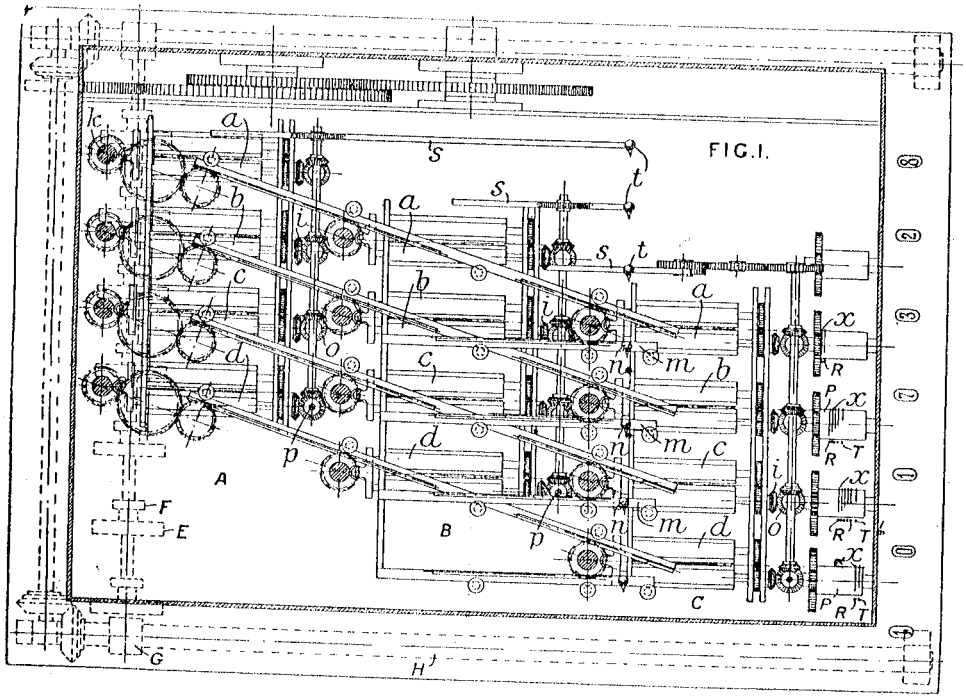

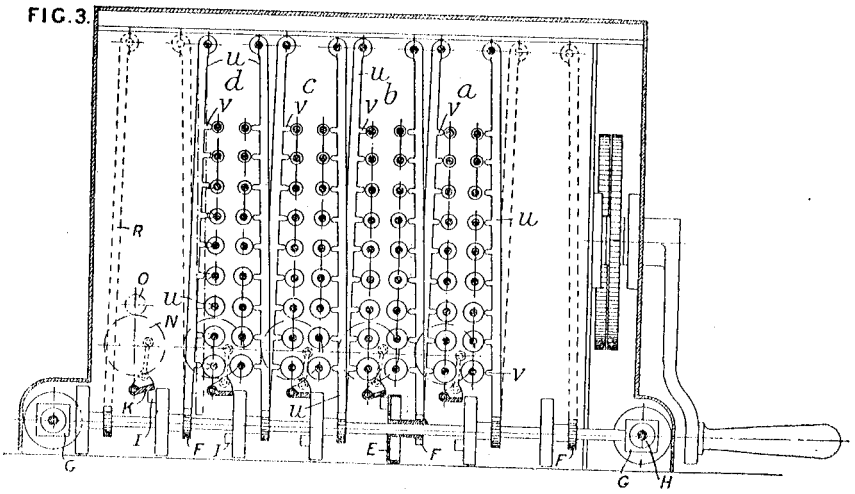

of the rods are brought into alinement with toothed receiving-wheels F attached to the numeral drums E. It will be seen from Fig. 3, that the rods representing the tens of one such partial product and those representing the units of the next higher partial product are moved into the same alinement. The lower ends of the bars are pointed and thus virtually form rack-teeth which are summed by the receiving-wheels F when the carriage in which the wheels are mounted is moved across the machine by the operating-handle through screw-and-nut mechanism H, G. The receiving-wheel which sums the teeth of one denomination of, say the group A, sums the teeth of the next lower denomination in the group B, as the elements *a*, *b*, *c*, *d* of the second group are displaced with reference to the similar elements of the group A.

Transfer mechanism.—Projections I, Fig. 3, on the numeral-drums E at transfer rock pivoted plates K and set, through wheels N, O,

© B O B Williams Printed22/11/2023 CalcPatents Ed. 1.doc

Vetch G A 3741/1896 Adder, discs or slides

3741. Vetch, G. A. March 14.

Calculating-apparatus.—The apparatus shown is for adding numbers, but it may be employed for adding sums of money, and rotary discs may be employed instead of slides. In the Provisional Specification other modifications are indicated. b, c are two graduated slides working in grooves and drawn towards the right by cords connected to spring drums. Along the grooves run numbered holes a^2, a^7, similar to those on a cribbage board, into which pegs k, k may be inserted. These pegs lie in the path of projections from the slides at the zero point and arrest them. At the beginning of an operation the slides are drawn to the extreme left and held by spring catches a^{30}, a^4. Suppose it is required to

P 11406 307 20—2

add together say 48, 53, 75. A peg is placed in the hole in the row a^5 opposite 8 on the slide b and one in the hole in the row a^7 opposite 4 in the slide c. The slides are then released and move up to these pegs. Fresh pegs are then inserted in the same way opposite 3 and 5 and the others withdrawn, and

FIG. 1.

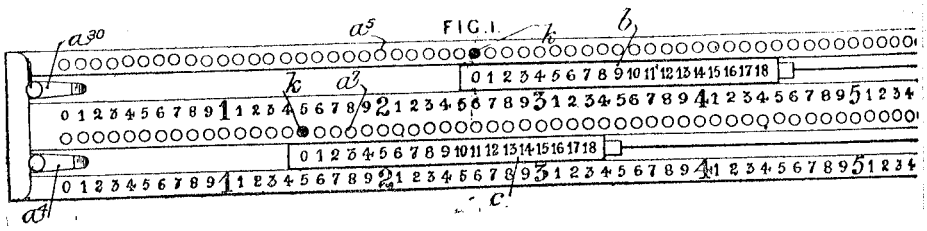

the process is repeated for the number 75. On the units row a^5 the slide b now registers 26 and the two slide 150. The two are then added mentally, giving the result 176.

Victor Cash Register Co 21834/1894 Cash Register

21,834. Lake, H. H., [*Victor Cash Register Co.*]. Nov. 12.

Receipts, checking and recording. — The till drawer 3 has flanges 4 at the top running between rollers, and is normally closed by a spring 22 acting on a cross bar 23 which works at its ends in slots 24, and whose movement is communicated to an extension 12 at the back of the drawer by levers 25, 26. When the drawer is pulled out, the spring catch 6 enters a notch in the bar 7 and locks it open. In this position the cross-bar 10 is under the projections 20 of the keys, so that any one of them if pressed will free the drawer, whereupon it closes again, jar and recoil being prevented by a rubber buffer and a swinging detent. Complete strokes of the drawer in either direction are ensured by two pawls 42 connected by a spring 55.

FIG. 1.

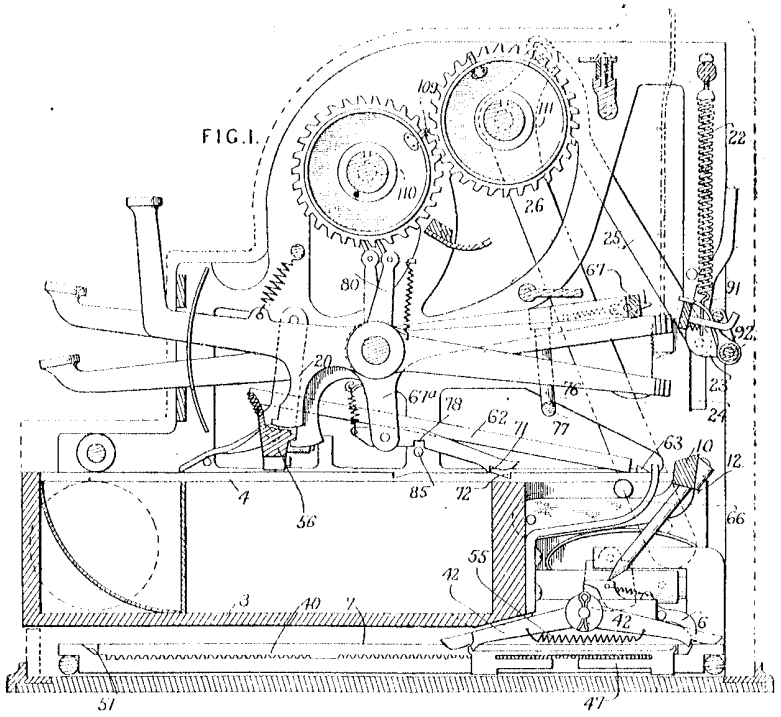

To prevent the clicking noise of the pawls on the rack 40, a shield 47, pushed along by the leading pawl, is provided to keep them out of engagement. The inclines 51 at either end reverse the arrangement, but any attempt to reverse the stroke in the middle brings the rear pawl into action. 56 is a universal bar for locking the keys, which is swung back as the drawer is pulled out by the arm 62, struck by the tooth 63, so that the depressed keys are freed. The pawl 71, pivoted on the arm 67a, engages a notch 72, and is thus thrust back, turning the arm 67a and forcing down the cross bar 67; this prevents a key being held down or operated while 56 is out of place. The bevelled end 77 of the curved rod 76 then pushes the rod 62 sideways and disengages it from the tooth 63, while the pin 85 lifts the pawl 71 free. Finally, the finger 66 at the back of the drawer swings back the bar 56 and sets free all the keys. When a key is struck, the bar 67 is raised, and the notch 78 in the pawl 71 engages the pin 85 and locks the bar up till the drawer is closed, while the bar 56 locks the keys, as seen in the Figure. Other detail mechanism for ensuring accurate working is described. Several keys may be partially depressed simultaneously without freeing the drawer, and are held in such position by check-pawls 91 on a cross bar 92 forming part of the

181

Vogel V 7540/1810 Add subtract

7540. Vogel, V. March 26.

FIG.2.

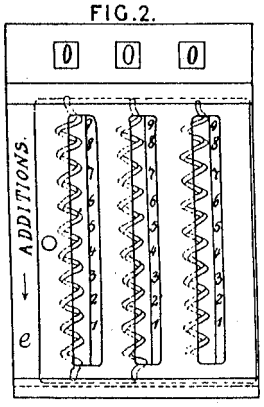

Adding and subtracting apparatus. — A machine operated by worm gearing has a series of skeleton worms, each mounted in a casing of which the sides act as guides for the operating-pin. A plan of the apparatus is shown in Fig. 2. On the casing cover a slide *e* is mounted to expose the numerals on one side of the worm-casing when performing addition and, by a lateral movement of the slide, a second series on the other side of the worm-casing is exposed when performing subtraction.

Wachter E & Hugle S 7080/1910 Abacus

7080. Wachter, E., and **Hügle, S.** March 21.

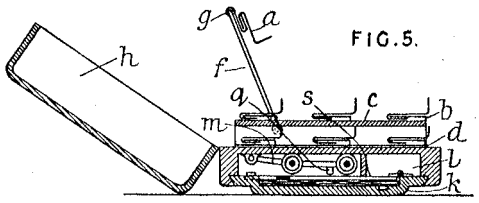

FIG.5.

Abacuses.—Relates to school boxes of the kind in which in addition to a receptacle for writing-materials there is provided an abacus adapted to erect itself by spring pressure and normally

123

Wahl J C 11696/1907 Adder on type writer

11,696. Wahl, J. C. May 18.

FIG. 9.

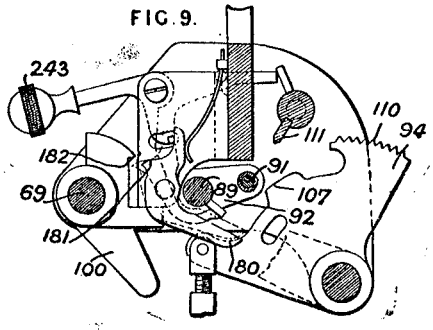

FIG. 10.

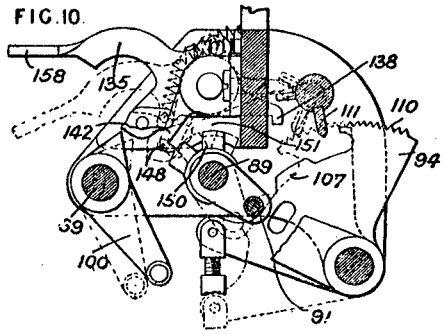

Calculating-apparatus; counting-apparatus.—Relates to an adding or subtracting attachment for

Wakefield C J 7778/1911 Adder billiard scorer

7778. Wakefield, C. J. March 28.

FIG.2.

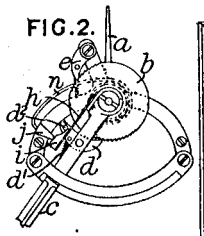

FIG.1.

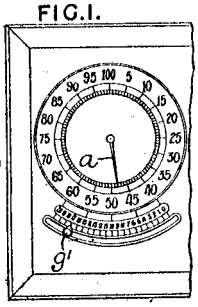

Adding-apparatus for recording each break in billiards on a segmental scale and for mechanically adding it to the previous score and simultaneously displaying the total score on a circular dial. A pointer g^1 working in a graduated slot and carried by a lever c indicates the separate breaks, while the lever c actuates, through a pawl d and ratchet-wheel b, a pointer a moving round a graduated dial, a non-reverse pawl e being provided. To release the pawl d from the wheel, it is moved one tooth in the reverse direction, thereby causing a pin d^2 to ride into engagement with the enlarged end i of a flat spring h. On being returned to zero the end i engages a stop j which releases the pin d^2 from the spring, the pawl being re-engaged with the ratchet-wheel by spring d^1. The hub of the ratchet-wheel is grooved and surrounded by a spring n which acts against the forward rotation and so causes the teeth to bear against the pawl e in order to hold the wheel in such a position as to be always engaged by the actuating-pawl d. In a modification, the pointer is operated from the ratchet-wheel by gearing, the increment scale being eccentric to the circular dial, and the arm h, instead of having an enlarged end, is itself bent to form a knuckle, above or below which the pin d^2 rests.

Wales C 21178/1902 Adder

21,178. Wales, C. Sept. 29.

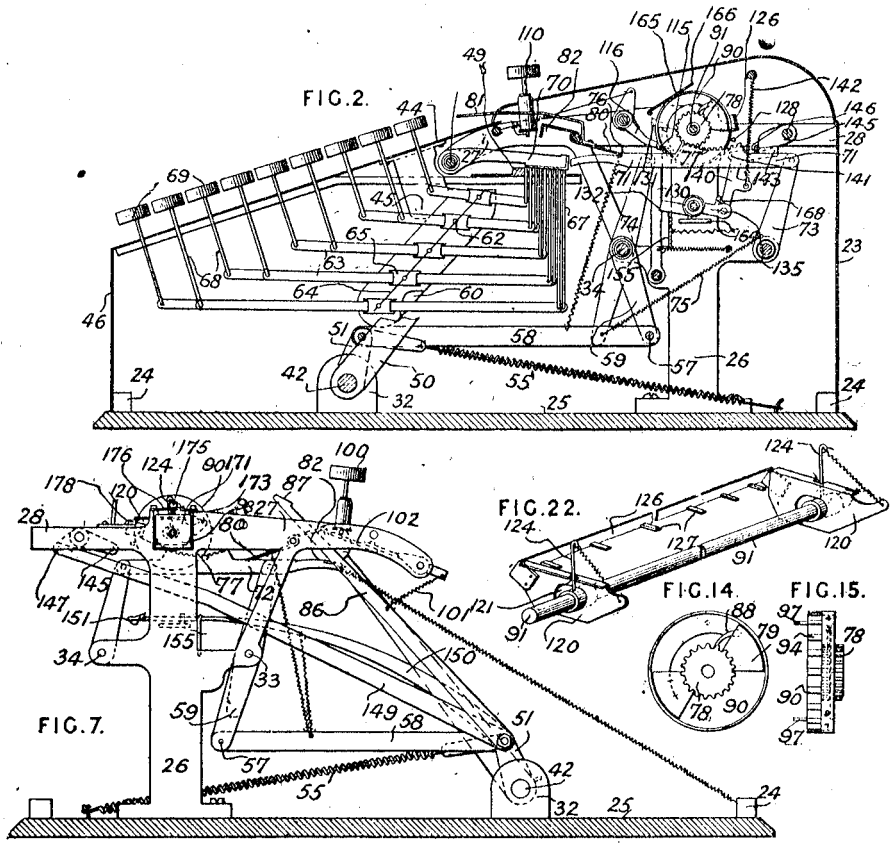

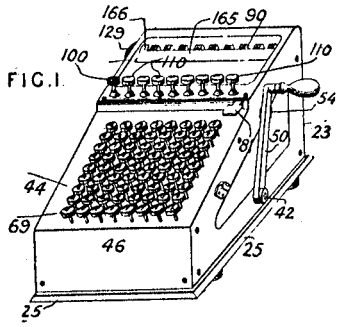

Calculating-apparatus.—In a keyboard adding-machine, stops are operated to regulate the throw of the racks which actuate the numeral wheels when driven by a hand-lever; incorrect settings can be directly cleared; the same number can be repeatedly added without re-setting; and direct zero-setting apparatus is employed. Fig. 1 is a general view of the machine, and Figs. 2 and 7 are sectional elevations. A base-plate 25, Fig. 2, has corner studs 24 for supporting the casing 23, 46, and uprights 32, 26 on each side, the latter having backward arms 28 and forward arms 27, upon which rests one end of the front cover plate 44 carrying the entire set of keys, key-levers, and stop-rods. There are nine keys, 69, in each row, having rods 68 which can thrust up aligned stop-rods 67 by means of levers 63, which are fulcrumed on pivots 62 in plates 60 hung from the cover by brackets 45. The pivots are secured by wires 64, and spring pieces 65 upon the levers bear against elastic strips which render the movements dead-beat. The thrust-up stop-rods 67 project through the block 49, and determine the extent of forward motion of the proper segmental rack-bar 71, which swings on links 74, 73 pivoted on spindles 34, 33, and is thrown forwards by the spring 75 unless held by the release plate 80 engaging in the notch 76. After each number is set on the keys, the extension

More omitted

Walford E L 2875/1881 Slide rule for exchange

2875. Walford, E. L. July 1.

[*Provisional protection not allowed.*]

Calculating - apparatus for calculating foreign exchange. A slide-rule is arranged so that the figures on the slides correspond to the moneys, goods, stocks, shares, &c. of different countries.

Walker A 11439/1908 Small Tab calc

11,439. Walker, A. May 26.

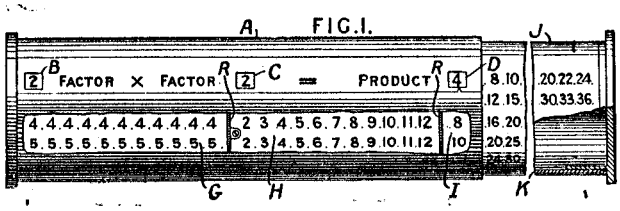

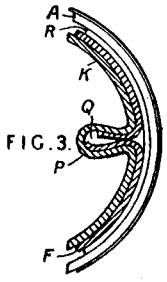

Calculating-apparatus.—A cylindrical pen, pencil, or like box or case, adapted for use as a ruler, is combined with calculating-apparatus, consisting of a hollow cylinder K on which are arranged removable tables J of inter-related numbers such as factors G, H and products I, and an outer sleeve A with three holes B, C, D. Ridges R, which may be integral with the sheets F, or integral with or removably attached to the cylinder K, prevent effacement of the figures by the outer sleeve. The ends of the sheets F are gripped in the recess Q, Fig. 3, in the cylinder K, by a feather, or by the sides P of the recess.

Walker G 10499/1914 Adder printer

0,499. Walker, G. April 28.

FIG. 1.

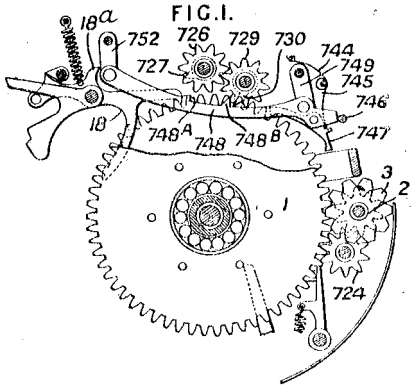

FIG. 7.

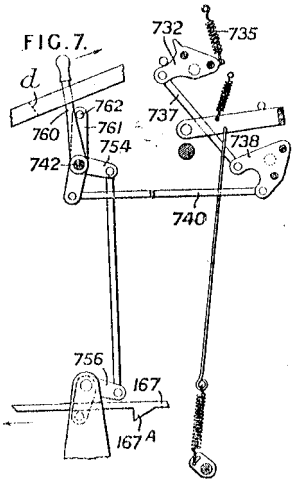

Adding and subtracting apparatus; printing totals; transfer mechanism.—Transfer mechanism applicable to calculating-machines of the kind described in Specification 26,858/10 is arranged so that the next higher totals driving-wheel is unlocked just before transfer takes place, the mechanism is set for addition or subtraction by the operation of a single lever, and the totals-printing wheels are automatically brought into printing position when the total key is depressed, whatever be the position of the lever. The mechanism, which is arranged so that at transfer the movement is slightly greater than a full step, comprises two series of intermeshing wheels 726, 729 mounted in a spring-retracted rocking frame 732, Fig. 7, so that either can be brought into engagement

© B O B Williams Printed22/11/2023 CalcPatents Ed. 1.doc

Waller J E 1739/1877 Adder

1739. Waller, J. E. May 4. [2*d*.]

[*Provisional protection only.*]

Arithmometer.—A number of wheels are placed under the top plate of a rectangular box and marked (for simple addition) with the numerals, so that, when the wheel is turned by a knob, such numerals are brought successively under a hole in the plate. Or, the wheel may be simply provided with a pointer and the numerals arranged in a circle concentric with it. Each of these wheels, which we will call A, works inside a second similar wheel B, and is provided with a coiled spring for returning it to zero, and also with a spring and click arrangement. Supposing it is required to add 2 and 3 together, the wheel A is turned to mark 2 and its corresponding wheel B moves with it; it is then returned to zero and moved to indicate 3, again moving its corresponding wheel B, which will now indicate 5. For carrying from units to tens and so on, the wheel B carries a circular rack which, as it passes from 9 to 0, gears with the next wheel. The machine may, by adding extra wheels suitably numbered, be used for addition of money and weights and measures.

Wallich C A N 7347/1902 Adder scorer

7347. Wallich, C. A. N. March 26.

Calculating-apparatus for recording the addition of numbers, the difference between two numbers, or the difference between the two totals of two series of numbers, is shown on Figs 1 and 2 as adapted to a scorer or marker for use in the game of "bridge." A disc 6, having in its lower surface a toothed wheel 8 and a spring detent for preventing it from being accidentally rotated, and on its upper surface an engraved or similar pointer 7, is mounted on the spindle 5, which can be turned by the thumb-button 11, and a hand 12 is also mounted by a ratchet and spring detent or by a friction grip on the spindle 5, so that it normally turns with the thumb-button 11 and the disc 6, although it can be turned independently thereof by means of the knob 17. Upon starting the game, the disc 6 and the hand 12 are set so that the pointers 7, 13, 14 all point to zero on the differently-coloured discs 3, 4 formed on the casing 2. If the first player scores 80, the disc 6 and the hand 12 are turned counter-clockwise until the pointer 13 indicates 80 on the blue dial 4. The hand 12 is then turned back to zero, while the pointer 7 on the disc 6 remains indicating 80 on the blue dial. During this operation a "hundreds" dial 19 coloured half red and half blue has been rotated by a pinion 18 on the spindle 5 to bring the 100 on the blue disc nearly beneath the pointer 21 in the opening 20. If the second player subsequently scores 18 points, the disc 6 and the hand 12 are turned clockwise until the pointer 14 indicates 18 on the red dial 3. The hand 12 is then again turned back to zero, and the pointer 7 indicates 62 on the blue dial 4. The number of "rubbers" gained by the players is indicated by the sliding pointers 24, 25, which force pivoted wings 26, 27

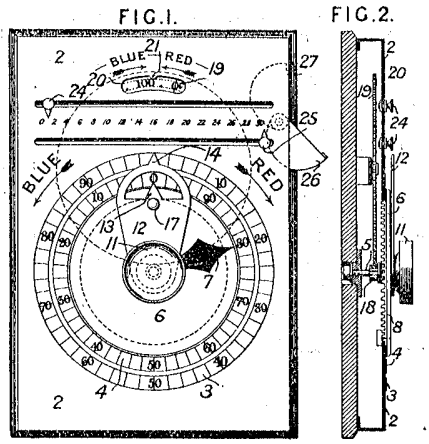

out from the casing to indicate the end of the game. The casing may be covered with glass, and a spring-controlled plunger and a heart-shaped cam may be provided for returning the hand 12 to the zero position. In a modification, the hand 12 moves between a transparent rotary disc 6 and a fixed lower dial plate, dials somewhat similar to the dials 3, 4 being arranged near the edge of the transparent disc, and showing one number of each dial through two openings in the opaque casing 2, the "hundreds" disc indicating whether the scores shown through these openings are in favour of the blue or the red.

© B O B Williams Printed22/11/2023 CalcPatents Ed. 1.doc

Walls R R 136043 of 1919 Harmonic analysis by pendulum

136,043. Walls, R. R. Feb. 28, 1919.

FIG. 1.

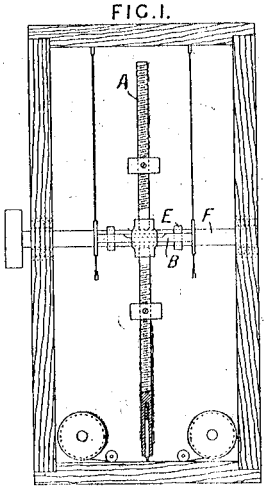

Harmonic analysis and synthesis. — A pendulum A swinging freely about its centre of suspension in the bar B is constrained to move also as a whole by the operation of cams E or the like on the driven shaft F. In a modification, there may be one or more pendulums mounted in gimbals on a framework again constrained to move as before. In a further modification, a pendulum is dispensed with, but a fixed bar carrying the pencil is moved under the influence of a number of cams, the motions of which are thus compounded. The Provisional Specification also states that subsidiary pendulums may be attached to the main pendulum.

Wallwork T 730/1866 calc apptus for multiplication

730. Wallwork, T. March 10. *Drawings to Specification.*

Calculating - apparatus for multiplication. A disc is mounted in an enclosing case, in each face of which is a radial slot, and the disc carries at each end of its axle a handle and pointer. The two sets of figures to be multiplied are marked respectively round the outside of the case and along the edge of the slot, the products being marked in the proper position on the dial, so that on turning the pointer to any particular figure. the products of that figure and the figures on the edge of the slot appear in the slot. A series of such machines may be mounted on hinged supports one behind the other and any particular one brought into use by being turned round to a horizontal position.

GB Patent 730, 10 March 1866 Thomas Wallwork Reckoning quantities full

A.D. 1866, 10*th* MARCH. N° 730.

Calculating Machine.

LETTERS PATENT to Thomas Wallwork, of Newton Heath, in the County of Lancaster, Clerk, for the Invention of "CERTAIN IMPROVEMENTS IN MACHINERY OR APPARATUS FOR COMPUTING OR RECKONING QUANTITIES AND AMOUNTS."

Sealed the 4th September 1866, and dated the 10th March 1866.

PROVISIONAL SPECIFICATION left by the said Thomas Wallwork at the Office of the Commissioners of Patents, with his Petition, on the 10th March 1866.

I, THOMAS WALLWORK, of Newton Heath, in the County of Lancaster, Clerk, do hereby declare the nature of the said Invention for "CERTAIN IMPROVEMENTS IN MACHINERY OR APPARATUS FOR COMPUTING OR RECKONING QUANTITIES AND AMOUNTS," to be as follows:—

My Invention is designed for the purpose of indicating and shewing the products arising from the multiplication of any two sets of numerals together, for which the tables and instrument may be arranged. The apparatus consists of a disc enclosed between two outer plates, and mounted on a

© B O B Williams Printed22/11/2023 CalcPatents Ed. 1.doc

central shaft or axis, at each end of which a finger or pointer and a handle is secured, by which the fingers are turned to point to any multiplying numerals, and which also turns the internal disc. In the outer plate are two slots made from the periphery towards the centre, down one side of each of which slots are marked the "multiplicands" or numbers to be multiplied, and round the outer edge of each of these plates the "multipliers" are arranged. On both faces of the internal discs columns of numerals are marked, which have been previously calculated and ascertained, and which represent the product of multiplication between the numerals on the edge of the plates or multipliers and the numerals down the slots or multiplicands, thus when one of the pointers is turned to any "multiplier" on the edge of the plate, the disc is also turned, and the product appears through the slot opposite to the multiplicand on the side of the slot. This combination and arrangement of apparatus may be mounted on a vertical spindle, so as to turn round to read both sides, and a series of the dials and plates may be arranged behind each other, and adapted and calculated for weights, measures, money, interest, or other tables, and where a series are employed, each apparatus may be made to fall into a horizontal position to clear the others, so that both sides may be legible by supporting the spindles on pivots and making a slot in the framing.

SPECIFICATION in pursuance of the conditions of the Letters Patent, filed by the said Thomas Wallwork in the Great Seal Patent Office on the 8th September 1866.

TO ALL TO WHOM THESE PRESENTS SHALL COME, I, THOMAS WALLWORK, of Newton Heath, in the County of Lancaster, Clerk, send greeting.

WHEREAS Her most Excellent Majesty Queen Victoria, by Her Letters Patent, bearing date the Tenth day of March, in the year of our Lord One thousand eight hundred and sixty-six, in the twenty-ninth year of Her reign, did, for Herself, Her heirs and successors, give and grant unto me, the said Thomas Wallwork, Her special license that I, the said Thomas Wallwork, my executors, administrators, and assigns, or such others as I, the said Thomas Wallwork, my executors, administrators, and assigns, should at any time agree with, and no others, from time to time, and at all times thereafter during the term therein expressed, should and lawfully might make, use, exercise,

and vend, within the United Kingdom of Great Britain and Ireland, the Channel Islands, and Isle of Man, an Invention for "CERTAIN IMPROVEMENTS IN MACHINERY OR APPARATUS FOR COMPUTING OR RECKONING QUANTITIES AND AMOUNTS," upon the condition (amongst others) that I, the said Thomas Wallwork, my executors or administrators, by an instrument in writing under my, or their, or one of their hands and seals, should particularly describe and ascertain the nature of the said Invention, and in what manner the same was to be performed, and cause the same to be filed in the Great Seal Patent Office within six calendar months next and immediately after the date of the said Letters Patent.

NOW KNOW YE, that I, the said Thomas Wallwork, do hereby declare the nature of the said Invention, and in what manner the same is to be performed, to be particularly described and ascertained in and by the following statement and accompanying Drawings (that is to say) :—

My Invention is designed for the purpose of indicating and shewing the products arising from the multiplication of any two sets of numerals together for which the tables and instrument may be arranged. The apparatus consists of a disc enclosed between two outer plates, and mounted on a central shaft or axis, at each end of which a finger or pointer and a handle is secured, by which the fingers are turned to point to any multiplying numerals, and which also turns the internal disc. In the outer plates are two slots made from the periphery towards the centre, down one side of each of which slots are made the "multiplicands" or numbers to be multiplied, and round the outer edge of each of these plates the "multipliers" are arranged. On both faces of the internal disc columns of numerals are marked which have been previously calculated and ascertained, and which represent the product of multiplication between the numerals on the edge of the plates or multipliers and the numerals down the slots or multiplicands, thus when one of the pointers is turned to any "multiplier" on the edge of the plate the disc is also turned, and the product appears through the slot opposite to the multiplicand on the side of the slot. This combination and arrangement of apparatus may be mounted on a vertical spindle, so as to turn round to read both sides, and a series of dials and plates may be arranged behind each other, and adapted and calculated for weights, measures, money, interest, or other tables, and where a series are employed, each apparatus may be made to fall into a horizontal position to clear the others, so that both sides may be legible by supporting the spindles on pivots and making a slot in the framing.

Wallwork's Improved Calculating Machine.

In order that the Invention may be better understood and explained in detail I have hereunto attached a Sheet of Drawings made upon a scale of about three inches to the foot.

Fig. 1 represents a front elevation of the apparatus for ascertaining and indicating the product or amount arising from the multiplication of any two sets of numerals together; this view also shews the arrangement and position of the aperture in the outer plate or cover through which one line or series of numerals appear, which are marked on the edge of the aperture and on the outer plate multiplied by each other; Fig. 2 represents the internal disc detached, the arrangement of the numerals being partly shewn in dotted lines; Fig. 3 represents a vertical section of the apparatus; Fig. 4 represents the front elevation of a similar apparatus arranged in sets of four or more, in order that amounts or products in money, interest, weight, or measure may be ascertained and indicated, each disc being duly calculated and arranged in accordance, and the amount may be ascertained from any particular disc by causing such disc to assume the horizontal position shewn; Fig. 5 represents a side elevation of a number of discs arranged for the purpose aforesaid.

In Figs. 1, 2, 3, 4, and 5, *a*, *a*, is the stand or support of the plates and discs, in which such plates and discs may be arranged to indicate on both sides, and may be turned upon the shaft or axis a^1, as seen in Fig. 1, or any one of the numbers, as seen in Figs. 4 and 5, may be withdrawn from the stand and caused to assume a horizontal position in the outer plates *b*, *b*, which enclose the internal disc; slots or springs *c*, *c*, are formed, which extend from the periphery towards the centre; down one side *d* of each of these slots are marked the "multiplicands" or numbers to be multiplied, and round the outer edge of each of these plates the multipliers are arranged. On both faces of the internal disc columns of numerals which have been previously calculated are marked, which represent the product of multiplication between the numerals on the edge of the plates or multipliers and the numerals down the sides of the apertures or multiplicands. Thus when the pointer *e* is turned to any multiplier on the edge of the plate, the internal disc is also turned, being mounted on the same shaft *f*, and the numerals which appear through the opening opposite to or in line with each multiplicand represents the product of the multiplication of one of the other.

Having now described the nature of the said Invention, together with the method of carrying the same into practical effect, I wish it to be distinctly understood that I claim the novelconstruction, combination, and arrangement

© B O B Williams Printed22/11/2023 CalcPatents Ed. 1.doc

of the apparatus, as herein-before described, set forth, and fully illustrated in the Drawings attached.

In witness whereof, I, the said Thomas Wallwork, have hereunto set my hand and seal, this Sixth day of September, in the year of our Lord One thousand eight hundred and sixty-six.

THOMAS WALLWORK. (L.S.)

LONDON:
Printed by GEORGE EDWARD EYRE and WILLIAM SPOTTISWOODE,
Printers to the Queen's most Excellent Majesty. 1866.

A. D. 1866. Mar. 10. N° 730.
WALLWORK'S Specification.

FIG. 1.

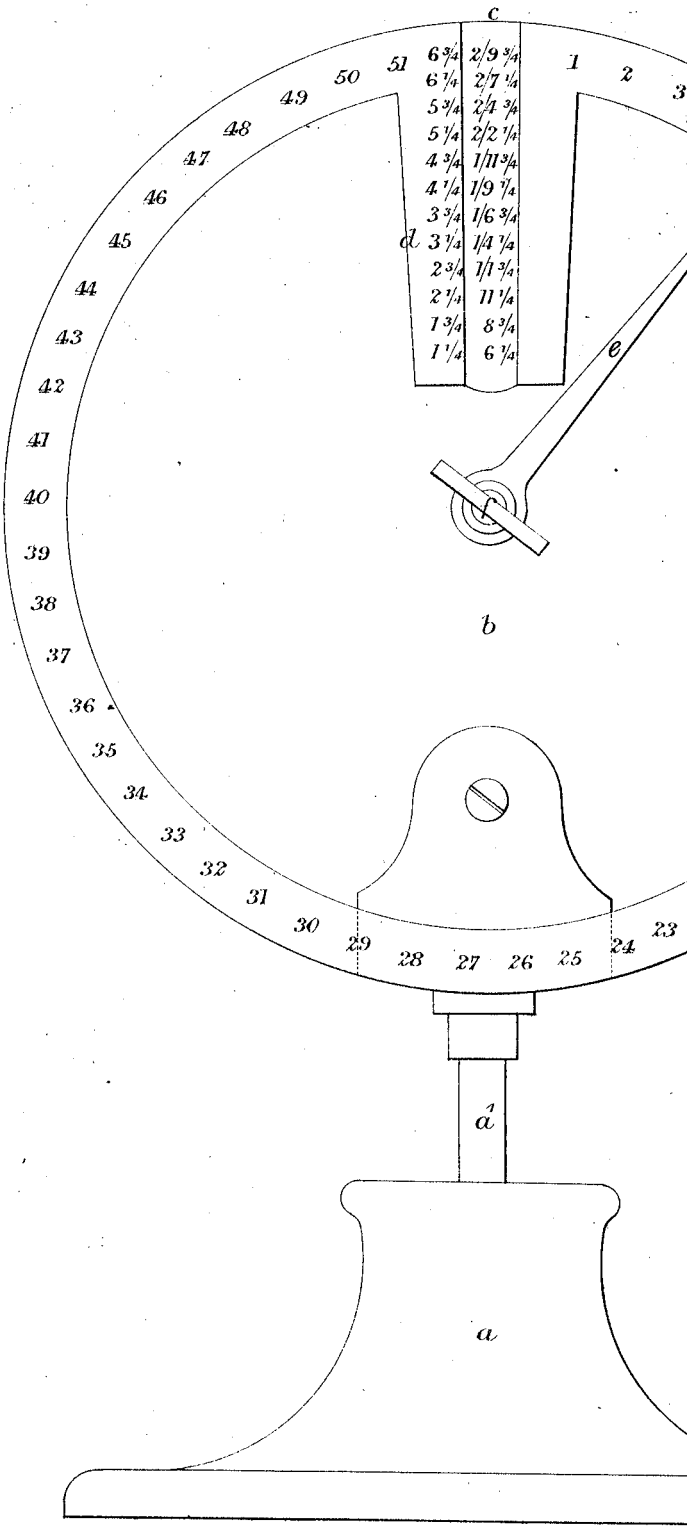

The filed drawing is not colored.

Wallwork OCR

My Invention is designed for the purpose of indicating and shewing the products arising from the multiplication of any two sets of numerals together, for which the tables and instrument may be arranged. The apparatus consists of a disc enclosed between two outer plates, and mounted on a central shaft or axis, at each end of which a finger or pointer and a handle is secured, by which the fingers are turned to point to any multiplying numerals, and which also turns the internal disc. In the outer plate are two slots made from the periphery towards the centre, down one side of each of which slots are marked the " multiplicands" or numbers to be multiplied, and round the outer edge of each of these plates the "multipliers" are arranged. On both faces of the internal discs columns of numerals are marked, which have been previously calculated and ascertained, 'and which represent the product of multiplication between the numerals on the edge of the plates or multipliers and the numerals down the slots or multiplicands, thus when one of the pointers is turned to any " multiplier " on the edge of the plate, the disc is also turned, and the product appears through the slot opposite to the multiplicand on the side of the slot." This combination and arrangement of apparatus may be mounted on a vertical spindle, so as to turn round to read both sides, and a series of the dials and plates may be arranged behind each other, and adapted and calculated for weights, measures, money, interest, or other tables, and where a series are employed, each apparatus may be made to fall into a horizontal position to clear the others, so that both sides may be legible by supporting the spindles on pivots and making a slot in the framing.

Wanderer Werke 19373/1912 Adder

19,273. Wanderer-Werke vorm. Winklhofer & Jaenicke Akt.-Ges., and **Greve, J. E. W.** Aug. 22.

Adding - apparatus with operating-means. — In key-set lever-operated calculating-apparatus, (1) a depressed key in any bank is latched by a pivoted spring-controlled denominational locking-bar, which permits the actuation of a second key in the same bank and the release of the key first depressed; (2) the series of denominational locking-bars is carried by a sliding frame, the movement of which, at the commencement of the operating movement, locks the entire keyboard, but releases it again before the completion of the operation so that a second item can be set thereon; (3) means are provided for giving the denominational stepped members a

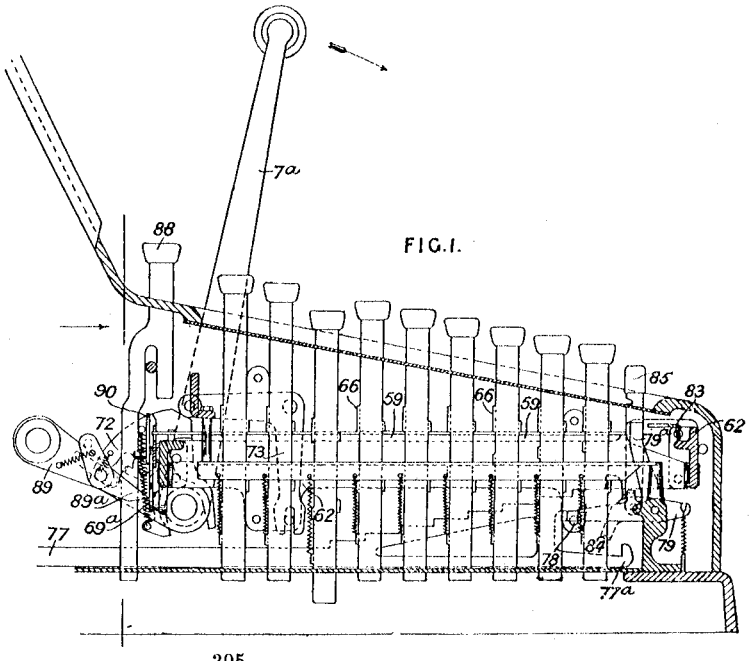

FIG. 1.

Watkin H S 1877/1870 Slide rule for height

1877. Watkin, J. W. S., [*Watkin, H. S.*]. July 2. *Drawings to Specification.*

Slide-rules.—The height of an observer being known, and also the angle of depression of an object, the range of that object is found by a special slide-rule. On a central sliding piece is a scale of degrees, and marked on the rule above the slide is a scale of altitudes, and below the slide, a scale of ranges. By bringing the given angle to coincide with the altitude on the scale, the range is indicated by an arrow on the sliding piece.

Watkins A 1388/1890 Photo exposure

1388. Watkins, A. Jan. 27.

FIG 1.

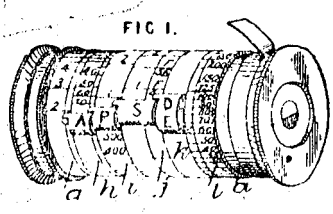

Calculating-apparatus.—Consists of an apparatus on the principle of the slide-rule for calculating the time of exposure to be given to a photographic plate. The time is calculated by multiplying together four factors, representing the actinic force of the light A, the sensitiveness of the plate P, the colour of the object and its distance from the lens S, and the relation of the diaphragm of the lens to its focal length D. For multiplying these factors six rings *g*, *h*, *i*, *j*, *k*, *l*, Fig. 1, are fitted on a tube *a*, the two outer rings *g* and *l* being fixed to the ring while the other four can be rotated upon it. The ring *g* is marked with a scale for A, the ring *h* for P, the ring *i* for S, the ring *j* for D, and the ring *l* with a scale of seconds for time of exposure, or result of the calculation. Inside the tube is fixed an actinometer, consisting of a strip of sensitive paper which is exposed till it attains a standard tint for determining the value of A. The time for the apparatus is measured by a pendulum consisting of the cap of a tube suspended by a chain. In a modified form, discs are used instead of rings.

Watkins A US Pat 456869 of 1891

(No Model.)

A. WATKINS.

INSTRUMENT FOR CALCULATING PHOTOGRAPHIC EXPOSURES.

No. 456,869. Patented July 28, 1891.

Fig. 1.

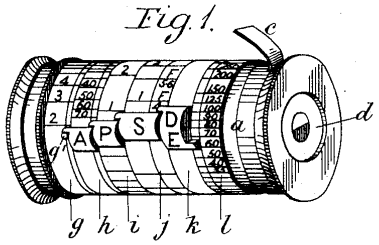

Fig. 2.

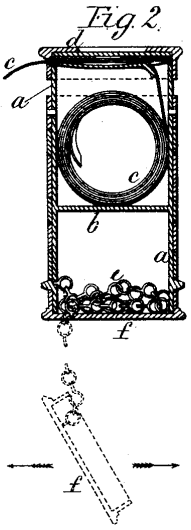

Fig. 4.

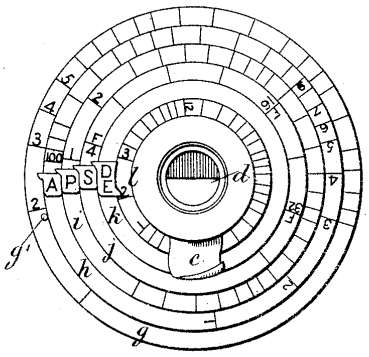

Fig. 3.

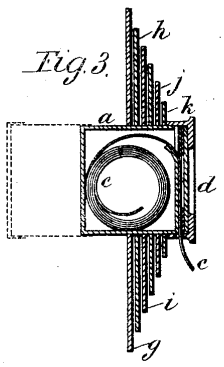

Witnesses:-
J. A. Rutherford.
J. G. Meyer Jr.

Inventor:
Alfred Watkins.
By James L. Norris.

Watkins A 14364/1893 Photo exposure

14,364. Watkins, A. July 25.

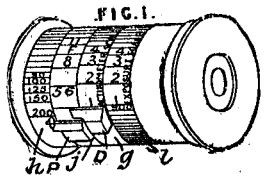

Calculating - apparatus.—Relates to improvements on the invention described in Specification No. 1388, A.D. 1890, for calculating photographic exposures. The fixed ring *h*, Fig. 1, carries the scale representing the sensitiveness of the plate, the movable rings *j*, *g*, the diaphragm and actinometer scales respectively, and the fixed ring *l* the exposure scale. The movable rings are provided with pointers P, D, and the actinometer number is read off against the exposure scale to find the required exposure. In a modification, a slide rule is used in lieu of the cylinder, Fig. 1.

Watkins A 23894/1893 Photo exposure

23,894. Watkins, A. Dec. 12.

Calculating-apparatus. — Relates to an instrument for timing photographic development. It has been found by experiment that the total time of development is a fixed multiple of the time of first appearance of the image for any given developer and plate. The instrument is intended to multiply the time of first appearance by this factor. In one form, Fig. 1, a sand glass is used. The sand is first contained in the chamber A^3, the outlet A^1 from which can be regulated by a screw valve B. At the commencement of development the glass is inverted, and the sand flows through the annular space F into the chamber A^4. On the first appearance of the image, the glass is reinverted, when the sand flows from A^4 into E through the aperture E^1 back into the chamber A^3. The aperture A^1 is so regulated by the valve that the final running out of the sand indicates the end of the development. In a modification, a clock and circular slide rule is used. The total time of development is calculated by the slide rule. On the clock glass, which can be turned round, a hand is painted, and this is set to the calculated time.

FIG. 1.

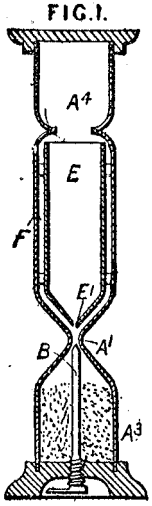

Watkins A 25000/1894 Photo exposure

25,000. Watkins, A. Dec. 22.

Calculating apparatus.—Relates to an instrument for calculating times of exposure on the principle of the slide rule, and having only one movable scale. The instrument is preferably made in the form of a watch, Fig. 1. The scale of times of exposure E, and the scale of sensitiveness of the plates P, are marked on a fixed outer ring; the scale of diaphragm numbers D, and of intensity of light A as shown by the actinometer, are marked on a revoluble disc *d*.

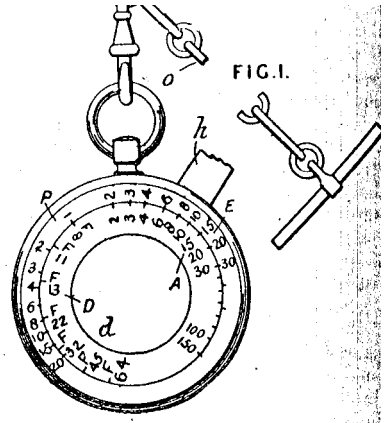

FIG. I.

Watkins A 36281/1898 device for photo exposure

26,281. Watkins, A. Dec. 13.

Calculating-apparatus for photographic exposures. Relates to the class of apparatus described in Specifications No. 14,457, A.D. 1884, No. 14,364, A.D. 1893, and No. 25,000, A.D. 1894. The watch-shaped casing has a back *a* fixed by a bridge *k* to the lid *l*; between these can be rotated a pad *d* carried by a ring *b*. A central boss e^1 is provided for receiving an annular disc *f* of sensitized paper, and other similar discs are stored between the pad *d* and the back *a*. Over the disc *f* is a plate *j* having apertures j^1, j^2 at different distances from the centre, and having tints painted at the side, and secured to the glass *h* is a cut-away mask *i*, which, by turning the glass, can expose either of the apertures and tints. The rotation of the ring *b*, to expose a new part of the sensitized surface, is controlled by a spring click or ball *c* entering notches b^1 in the ring. Revolving scales, as described in Specification No. 25,000, A.D. 1894, are mounted on the back *a*. A modified form, without the middle part and the revoluble scales, but marked on the back with a scale of diaphragms and a formula for exposure, is

FIG. 1.

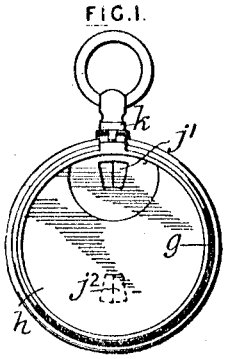

FIG. 4.

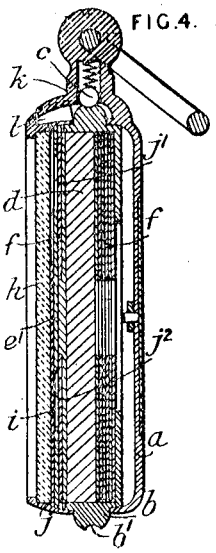

Watkins A 5737/1900 Photo exposure slide rule

5737. Watkins, A. March 27.

Slide-rules.—Relates to a photographic shutter combined with a slide-rule by which the time of exposure is calculated from the necessary data, namely, size of diaphragm, sensitiveness of plate, and intensity of light. The sensitiveness of the plate and the intensity of light are represented on two movable logarithmic scales *a*, *b*. The figures representing these factors in the particular case are first brought into coincidence by moving one of the scales. Then both scales are moved together

FIG. 2.

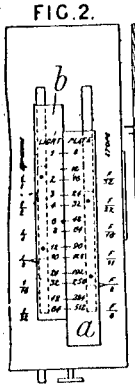

FIG. 1.

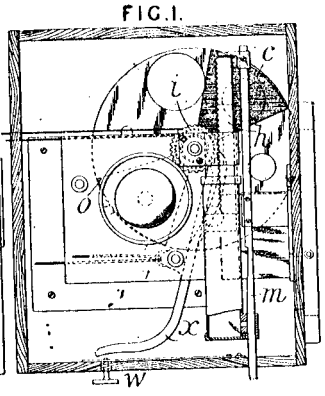

till the index points on *a*, *b* indicate the required diaphragm aperture and time of exposure. The slide *a* is connected to a rack which gears with a pinion fixed to the diaphragm plate and thus brings the required aperture opposite the centre of the lens; or the diaphragm may be set by hand. The slide *b* is connected to a rod *m* which is tapered so as to regulate the exit from the cylinder of an air brake, by which the speed of the shutter is regulated. The shutter consists of two spring-actuated sectors *o*, *c*. one of which *o* opens the lens and the other *c* closes it; both are simultaneously released by pressing the button *w* against the lever *x*. The time which elapses before *c* closes the lens is controlled by the air piston which is geared to *c* by the rack and pinion *i*.

Watkins A 19331/1900 Watch device for photo exposure

19,331. Watkins, A. Oct. 29.

FIG.1.

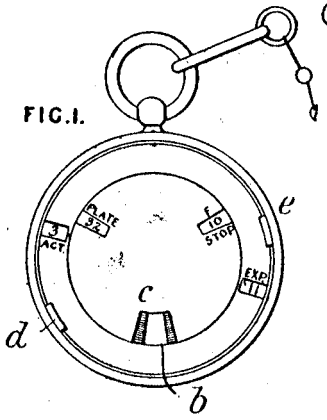

FIG.2.

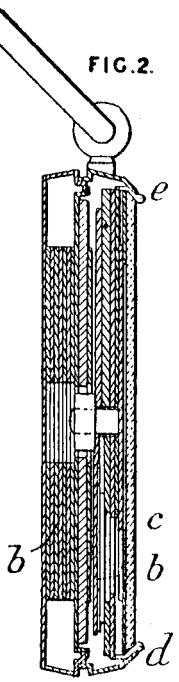

FIG.4.

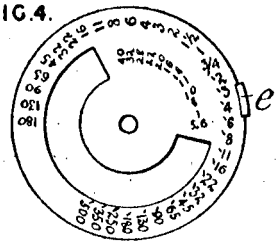

FIG.3.

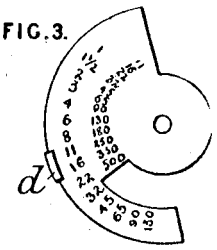

Calculating - apparatus. —Relates to an instrument for measuring the chemical intensity of light, combined with a slide-rule apparatus for calculating photographic exposures. The instrument is in the form of a watch. At the back is a disc of photographic printing-paper *b*, Fig. 2, an unexposed part of which is brought opposite the aperture *c*, Figs. 1 and 2, and exposed to the light till it just perceptibly darkens, or till it darkens to a standard tint. From the time required for this, the actinic strength of the light is determined. By turning the tongue *d* the number denoting the sensitiveness of the plate is brought opposite the aperture "PLATE," and, by turning the tongue *e*, a number denoting the stop is brought opposite the aperture "STOP." The watch glass is then turned till the light value appears at the aperture "ACT." The correct exposure is

40

Watkins A 5737Photographic shutter with Slide rule

5737. Watkins, A. March 27.

Slide-rules.—Relates to a photographic shutter combined with a slide-rule by which the time of exposure is calculated from the necessary data, namely, size of diaphragm, sensitiveness of plate, and intensity of light. The sensitiveness of the plate and the intensity of light are represented on

330

two movable logarithmic scales *a*, *b*. The figures representing these factors in the particular case are first brought into coincidence by moving one of the scales. Then both scales are moved together

FIG. 2.

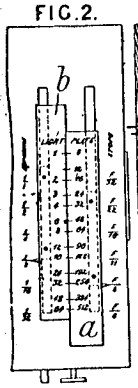

FIG. 1.

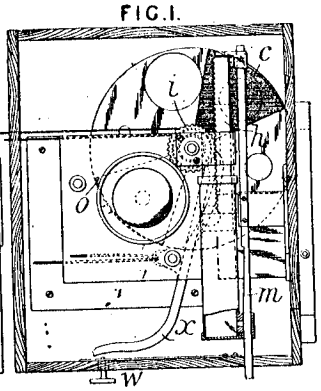

till the index points on *a*, *b* indicate the required diaphragm aperture and time of exposure. The slide *a* is connected to a rack which gears with a pinion fixed to the diaphragm plate and thus brings the required aperture opposite the centre of the lens; or the diaphragm may be set by hand. The slide *b* is connected to a rod *m* which is tapered so as to regulate the exit from the cylinder of an air brake, by which the speed of the shutter is regulated. The shutter consists of two spring-actuated sectors *o*, *c*, one of which *o* opens the lens and the other *c* closes it; both are simultaneously released by pressing the button *w* against the lever *x*. The time which elapses before *c* closes the lens is controlled by the air piston which is geared to *c* by the rack and pinion *i*.

Watkins A 27822/1902 Slide rule for photo exposure

27,822. Watkins, A. Dec. 16.

Slide rules.—Relates to an apparatus on the principle of the slide rule for calculating photographic exposures. Reference is made to Specification No. 25,000, A.D. 1894. Fig. 1 shows a circular or watch form of the apparatus. On the movable plate *b* are marked the numbers representing plate speed and actinic value of the light, and on the fixed ring *a* are marked the numbers representing the diaphragm numbers D and the times of exposure E. By setting the given plate-number opposite the given diaphragm-number, the time of exposure can then be read off opposite the light-value number. A section of a disc of sensitive paper is exposed at the aperture *d* till it acquires a standard tint, the time required for this being taken as the light-value number. The disc *b* is supported on a pad inside the casing. A modification in which the slide rule is straight is described.

FIG. 1.

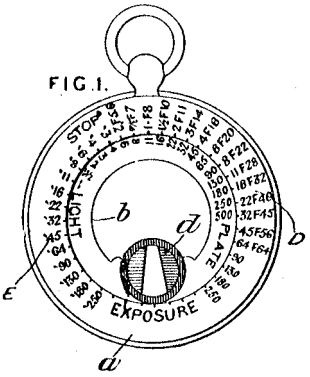

Picture courtesy Peter Hopp



Watkins A 22456/1907 Slide rule for photo exposure

22,456. Watkins, A. Oct. 11.

Calculating-apparatus for determining the relative times of development of photographic plates or films for different temperatures consists of a base, reading temperatures, having a slide marked logarithmically and set to the temperature coefficient of the developer. The rate of development for ordinary ranges of temperature is given by the equation $v_{(T+t)} = v_{(t)} + kt$, k being the temperature coefficient for 1° C. If the speeds of development for a given plate and given developer be found experimentally, k can be calculated, and its value used to determine the speed at any other temperature. The scale B, Fig. 1, represents temperature and, where cut by the scale A, which is logarithmic, is an equal-division scale. The scale A, representing times or duration of development, can be set to the coefficient of the developer used along the scale C, which gives the coefficients proper to 10° F. When the scale A is marked on a rotating disk a^1, Fig. 2, the scale B consists of lines curved outwards from a straight standard temperature B°, the scale B where cut by the scale A being an equal division scale. In this modification, the scale C is on the rear of the slide b^1 and reads against a mark on the rear of the plate c^1; or the mark may be on

FIG.2.

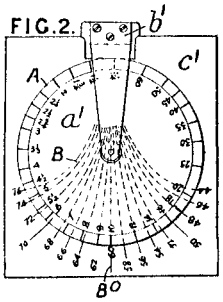

FIG.1

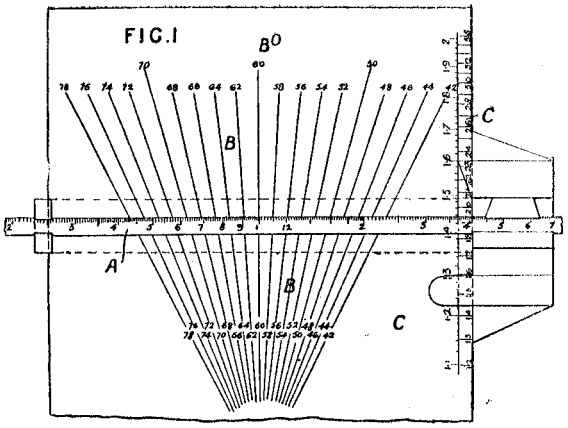

Watkins A 12120/1909 Slide rule photo exposure

12,120. Watkins, A. May 22. [*Addition to* 22,456/07].

Logarithmic calculators.—Relates to modifications of the apparatus described in the parent Specification, for determining the relative times of development of photographic plates or films for different temperatures, and comprising two relatively movable slides, one bearing a temperature scale and the other a logarithmic scale representing time values, and in particular to such apparatus in which a thermometer is used as the temperature scale. In the present modification, the thermometer does not bear a temperature scale, and the relative times of development for different temperatures are directly indicated by the expansion of a fluid. A thermometer has a single mark representing a standard temperature (say 60° F). The relatively movable logarithmic scale determined for a medium plate is positioned so that the correct time of development at 60° F. is indicated by this mark. The level of the fluid in the tube then directly indicates the time of development. The logarithmic scale,

FIG. 1

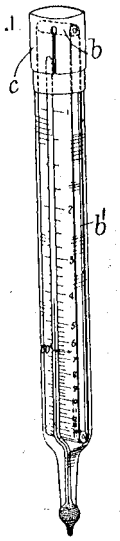

Watson A J 1676/1891 Military calculating board

1676. Watson, A. J. Jan. 29.

Calculating-apparatus.—Relates to a military instrument for ascertaining the parapet required to obtain a given amount of cover from an enemy's fire, or the cover afforded by a given rise of ground. It consists of a board A bearing a pair of radius arms B, B^2 and a graduated arc C, and marked with a series of parallel lines. A plumb-line d^2 enables the instrument also to be used as a clinometer. The arm B is set to the sum or difference of the angles of elevation of the enemy and drop of his fire, while the arm B^2 is set to the inclination of the ground to be covered. The number of yards of covered ground is read on the arm B^2, and the corresponding height of parapet given by the vertical lines between the arms at this reading.

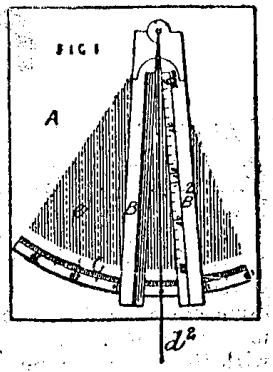

153

Watson J 2146/1905 Scales for volumes

2146. Watson, J. Feb. 3.

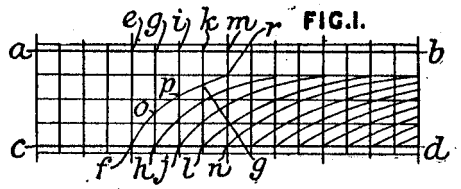

FIG. I.

Computing-scales are graduated in such a way that lengths, corresponding to equal volumes, or lengths corresponding to volumes in any determined ratio, can be obtained for cylindric and prismatic bodies of different sectional areas. The graduations consist of longitudinal and transverse lines and specially determined curves. The scale shown is for determining the ratios of the lengths of prisms of similar cross-sectional shape, but of different areas. Distances along *a b* represent the dimensions or end areas of prisms, and the distances *g o*, *i p*, &c. represent the lengths of prisms of equal volumes. The successive curves are similarly determined, and any number may be inserted. Another scale shows the ratios of the lengths of square prisms to cylinders of less sectional area but of equal volumes, distances along *a b* representing the ends of square prisms, and distances along *c d* the diameters of cylinders. Scales may be similarly determined for dealing with hollow cylinders and prisms of dissimilar shapes.

Watson T H 9900/1894 SR for displacement of ships

9900. Watson, T. H. May 22. *Drawings to Specification.*

Calculating apparatus.—Relates to a slide rule for calculations connected with shipping. The rule is provided with a slide on each side and specially-arranged logarithmic scales. The scales on one side are adapted for calculating displacement, register tonnage, &c. from the principal dimensions of the vessel, while those on the other are arranged for the determination of speed from the indicated horse-power and the displacement.

Webb 2382/1869 Adder

2382. Lake, W. R., [*Webb, C. H.*]. Aug. 9.

Calculating-apparatus.—An apparatus for adding consists of two revolving discs A and C connected together in such a way that the small disc C moves through one division for every revolution of the disc A. The disc A is marked with two sets of the numbers 00, 01, &c., to 99. One set is read through a slot J in the plate *m*, and is in the opposite direction and starts from the opposite side of the disc to that of the other set. The opening in the plate *m* is also divided into a hundred parts, as shown. The smaller disc C has similar sets of numbers, from 0 to 49. Divided

79

circles are also provided on a disc D, on the disc A, D on the plate *m*, for adding money. In the disc A are holes *a* opposite the points for numerals, for shillings and for pence, so that a pointer may

FIG. 1.

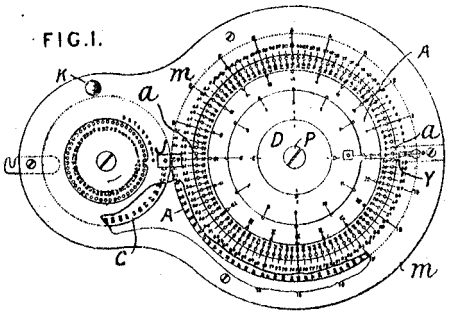

FIG. 3.

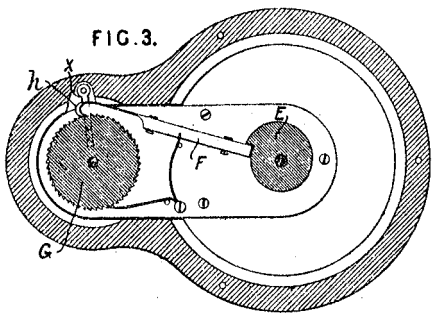

be inserted to turn the disc. The disc C is actuated from the disc A by means of a cam E, Fig. 3, a ratchet-wheel G, and a rod F with a hook *h*. A spring X limits the motion of the hook *h*, so that the wheel can only move through a space of one tooth at a time. The disc C may be released for moving independently by pressing a piece K, Fig. 1, on the spring X. To use the apparatus, the discs are first moved to show 0 0 0 through the slot J,

Webb's patent adder and tally board Reprinted from The Scientific American, 1869

We have an innate and hereditary hatred of all of the order ophidian, and we much doubted the expediency of receiving Mr. Webb's reptile into our office, but having seen the animal and found it was no "snaik" whose head was to be crushed, but an industrious little device calculated to save head-wear, we welcomed it cordially. Its appearance is similar to the accompanying engraving, the implement, however, being larger, measuring about six and three-quarter inches long by about five inches across the widest place. The form is seen in the engraving. A large disk, A, and a small one, B, both revolving, and

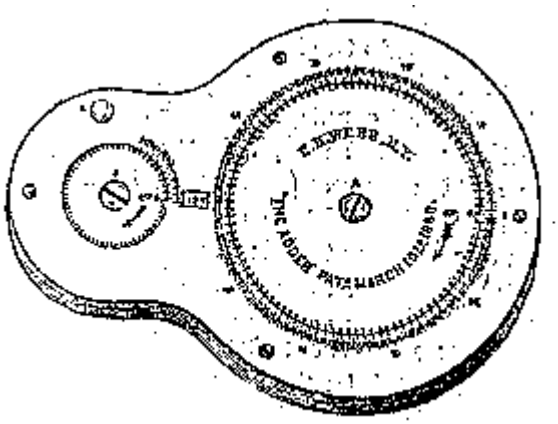

both graduated around the circumference and marked with figures in two concentric circles, are seated in a case and and partially covered with a metallic plate, leaving only the inner circle of figures exposed, except at a small opening between the two disks, where one set of figures, on the outer circle of each, is seen through the slot in the plate. The plate around the larger disk is marked from 0 to 99 te correspond with similar numbers on the disk's concentric circles. The smaller disk has 50 numbers, from 0 to 50, with a corresponding segment of numbers (units) from 0 to 9 ranging from the opening in the plate or cover back around a portion of the smaller circle. The larger disk has on its under side a ratchet with a single tooth and the smaller one a ratchet of fifty teeth. A connection is made between the two by a spring pawl so that one entire revolution of the large disk will move the small one one-fiftieth of its circumference. The operation may be comprehended by the above description of the parts. The Inventor believes that it is a great aid to accountants, substituting a merely mechanical process for mental or brain labor. Certainly if his manipulation of the device, and the opinions of these who have given it a trial are to be considered, the implement should be estimated as a valuable adjunct to the means of summing up wearisome columns of figures. It may be let in flush with the surface of a desk so that the accountant, or clerk,may always have it at his elbow, working it with one hand while keeping his place in the columns of figures with the other. It is neat, handy, and presentable, but although it will add numbers rapidly, it is doubtful if it will add to a man's fortune or to his family. With this drawback we can indorse the adder. Orders for the implement or for explanatory circulars should be addressed to the patentee, C. H. Webb, 571 Broadway, New York city.

Memo re Webb from Bob Otnes
It turns out that the design shown in the British version of the patent is radically different from the American one, 75,322, granted March 10, 1868.

A rough summary of what seems to have happened is as follows:

* Webb received his US patent on March 10, 1868. No filing date is given in the patent.

* The machine shown in the patent does not seem to have been made.

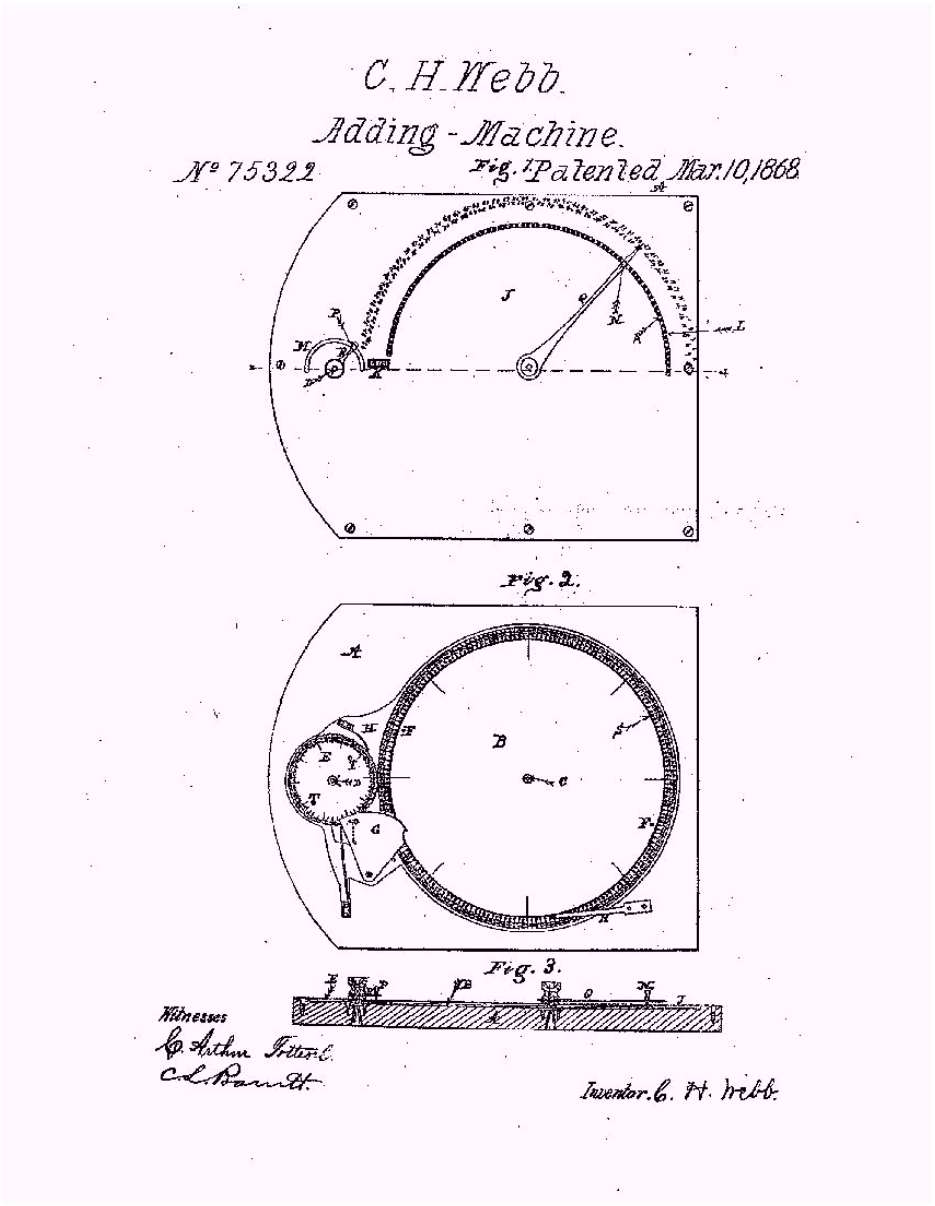

* The British patent 2382 was granted August 9, 1869, over a year later.

* The mechanism shown in the British patent apparently was the first type made. I have an example. However, it had a design flaw: the leaf the spring acting as both a detent and an actuator of the carrying mechanism was probably too delicate. At least, in my example, it is broken. My example is the only one of its type known to me, though there are not doubt others.

* Most of the Webb Adders that I have seen replace the single spring with two: a leaf spring for the detent, and a large coil spring to activate the carry.

What I am trying to do is figure out when this change took place. I believe that the machine in the US patent was never made, and the one shown in the British patent was made but soon modified.

See also [31]

Webb C H 9269/1888 nine-digit adder

9269. Webb, C. H. June 25.

Calculating-apparatus.—Relates to adding-machines with independent adding-devices for each vertical row of numerals to be added. In one form a series of flexible metallic strips *d*, perforated with equidistant holes, can be drawn behind slots in a plate E from a cylinder A to a cylinder A^1 by a style inserted in any of the holes. The sides of the slots are marked with numbers corresponding to the holes and the style is inserted at the number which it is desired to add. The strips are marked with the successive numbers from 0 to 99, the units on one of the holes and the tens on the other appearing respectively at the holes *i* and *j*. The holes *j* thus show the numbers to be carried, while the total is read in the holes *i*. In the cylinder A the strips may be coiled on drums fitting with friction on a spindle B by which they can be wound back again. Normally the handle F of the spindle is held in a catch *d*. In the cylinder A^1 the strips simply coil upon themselves. Instead of the drum the spindle may bear pin-wheels, which engage the holes of the strips. The strips

295

then coil upon themselves as in the cylinder A^1. The coils are separated by partitions. Other forms have slides or discs in place of the strips.

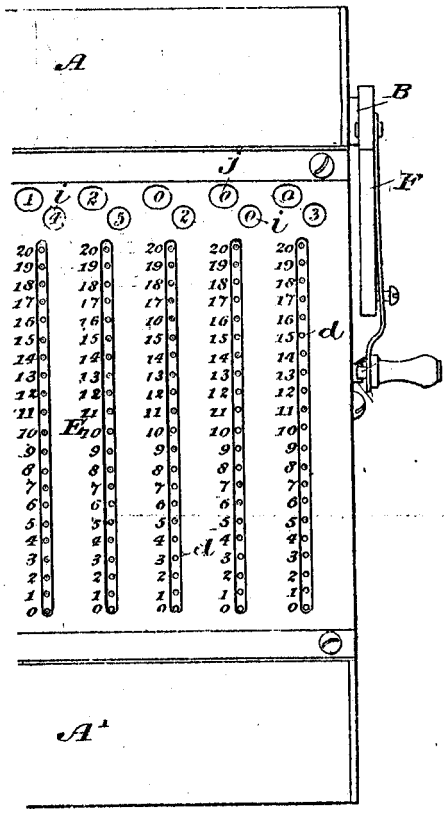

Webb C H 8891/1889 Circular adder

8891. Thompson, W. P., [*Webb, C. H.*]. May 29.

Calculating-apparatus.—A tray *a* contains two adding-wheels *b*, *c* kept on two large hollow journals by flat rings *d*, *f* marked with the numbers that are to be added. The wheel *b* adds up to 99, and the wheel *c* registers the hundreds. The peripheries of the wheels are tangent to each other at the point of the case at which the reading-slot is placed. The wheel *b* is turned by a style inserted into the pits *e* corresponding to the numbers on the ring. The style is brought round to a stop *w*, which is made of hard steel, and is fixed by a rivet d^1 and a hook w^1. The pits are formed by making

FIG. 3.

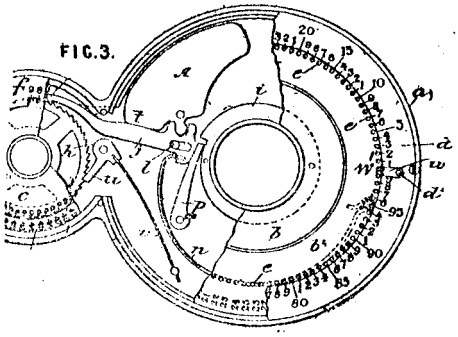

holes through a ridge round the wheel and placing a plain ring beneath. The wheel *c* may be twisted in a similar way. The complete revolutions of the wheel *b* are transferred to *c* by the following gear:—The wheel *c* has ratchet teeth which are engaged by a draw-hook *j*, slotted over a fixed pin *l*. A cam *i* on the wheel *b* causes the hook to take up a tooth, and a curved spring *n* pulls it back. A pivoted washer arm *h* is interposed between the cam and hook to prevent the vibration of the latter, when the wheel is put to zero, from moving the wheel *b*. Advance of the wheel *c*, due to momentum, is prevented by a hammer A which the hook brings down upon itself, thereby becoming jammed on the ratchet-wheel. This draw-hook mechanism may be replaced by a vibrating pallet arrangement. A check-pawl *u* prevents reverse rotation. The apparatus may be modified for adding money.

Webb C H 7633/1893 Stylus Adder

7633. Thompson, W. P., [*Webb, C. H.*]. April 14.

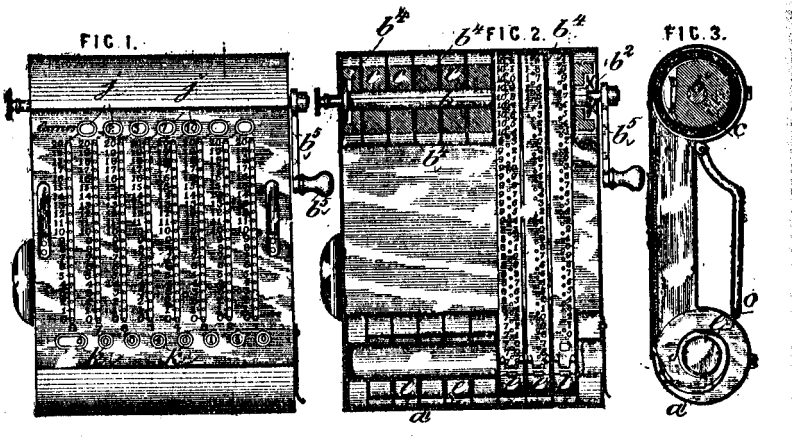

Calculating-apparatus.—A number of numbered and perforated strips of paper or other cheap material are coiled on rollers *c*, *c* loosely mounted on a shaft *b*. Between each pair of rollers is a disc b^4 fast on the shaft, so that when the latter is pulled to the right, against the spring b^2, and rotated by the crank b^5 the strips are all wound up simultaneously. The strips are preferably of different colours and are numbered to suit any notation, the results being seen through openings *k* on the outer case, and the "carrying" numbers through apertures *j*. The strips are manipulated by a stylus which is inserted into the perforations, and they are coiled on the casing a^1 by springs *e*. The apparatus when in use is supported, in an inclined position, by a handle *o* by which it may be carried.

Webb M J 21646/1914 Coins for a wages list

21,646. Webb, M. J. Oct. 28. *Drawings to Specification.*

Calculating-apparatus in which the items of a wages list are analysed into the various coins &c. necessary for direct payment, the pounds being analysed into five-pound notes and sovereigns, the shillings into half-sovereigns and units, and the pence into sixpences and units. The keys are arranged in two sections, those on the left being used to set up the wages items, and those on the right being operated from the wages keys. On the left, there are single banks of keys numbered 1 . . . 9 for the pounds, unit shillings, and pence, and keys for the tens of shillings and pence. On the right are arranged keys for items of five pounds, half-sovereigns, and sixpences, single banks of keys numbered 1 . . . 4 for the sovereigns, 1 . . . 9 for the units of shillings, and 1 . . . 5 for the pence. In operation the depression of any key on the left energizes corresponding solenoids on the right to depress keys showing the coins necessary for payment.

Welter J 3227/1905 Tab calc mult

3227. Welter, J. Feb. 16.

Calculating - apparatus for multiplying, of the kind in which the whole of the possible products are marked upon a movable band, and one set of arguments, also carried thereby, is so arranged that the second argument

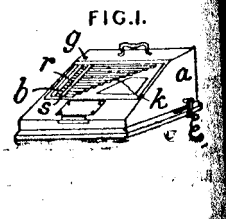

Welton F R 21651/1905 Adder

21,651. Welton, F. R. Oct. 24.

Calculating-apparatus.—In multiple-bank adding-machines, set and actuated by selective manual operation of a recessed finger-wheel, the counting-wheels, of large size, the setting and actuating wheels, the unlocking-slides, which at the end of each actuation break connexion between the actuator and the counting-wheel, and the zeroizing-levers

are all loosely mounted upon the main shaft. The transfer mechanism consists of link-work and slides always moved during the latter part of each actuation but requiring to be tripped by each ten-tooth. The frame consists of base, front, back,

FIG.7.

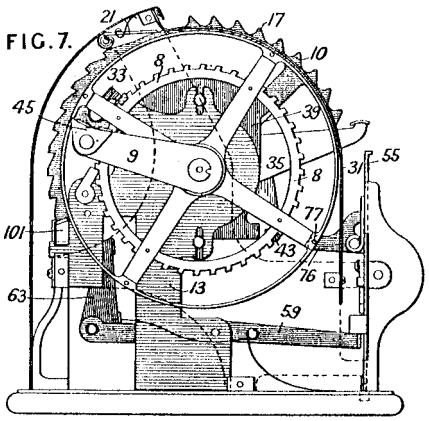

FIG.2.

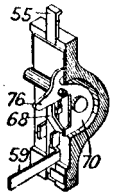

FIG.5.

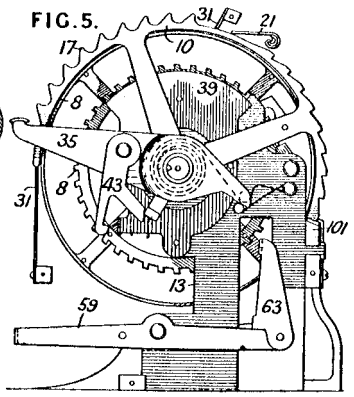

and end plates with intermediate plates 13, Fig. 7, between each pair of which a complete set of parts is mounted. A lateral flange extends from each actuating-wheel 10 beside its finger-plate 17 and bears numbers, one of which shows through a hole in a fixed superposed screen 31 at the end of each actuation to indicate the item added, other numbers upon the screen indicating the proper position for the finger in setting. When, however, the actuating-wheels are restored, the counter-wheels 8 each show a digit through the holes in the fixed screen. The actuating-wheels drive through the pawl 33 and the teeth on the counter-wheels, the intermediate frames allowing the pawls to come into play just after the operator's finger moves, and uncoupling occurs when the finger strikes a lever 35, the pawl 43, Fig. 5, on which locks with a projection upon the vertical sliding plate 39, so that, as the lever is released, a spring may restore the lever, lift the sliding plate to disengage the driving-pawl, and permit a spiral spring around the main shaft to restore the actuating-wheel, which in turn restores the pawl 43 and the sliding plate. This action is, however, suspended until

© B O B Williams Printed22/11/2023 CalcPatents Ed. 1.doc

Wendler A 7842/1911 Spher trig

7842. Wendler, A. March 29.

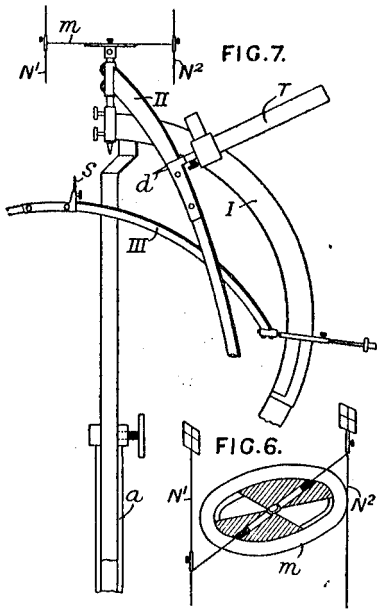

FIG.7.

FIG.6.

Spherical-trigonometry calculators for evaluating spherical triangles in nautical and astronomical calculations, comprising also means for setting the angles directly by observation. A tripod foot with socket *a* supports a vertical bar about which swing arcs I, II, on which slide verniers, a third arc III being arranged to work on a radial pivot in a vernier. A pair of the verniers carry points *s*, *d*, which are brought

Wendling–Hoch Adding Machine Co. 21592/1911 Adder printer motorised

21,592. Justice, P. M., [*Wendling-Hoch Adding Machine Co.*]. Sept. 30.

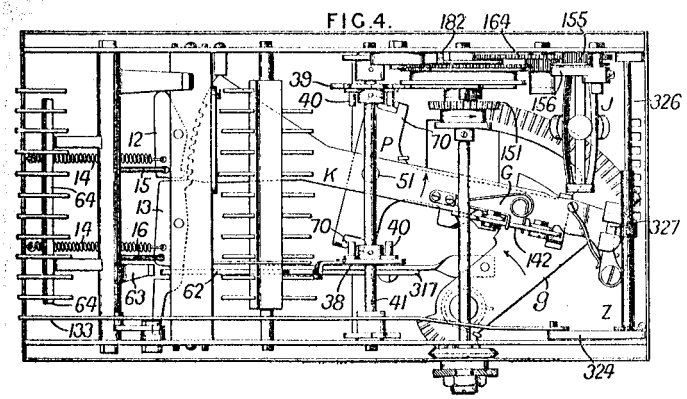

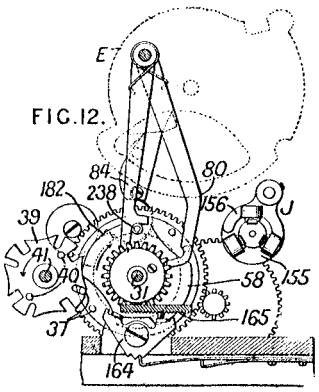

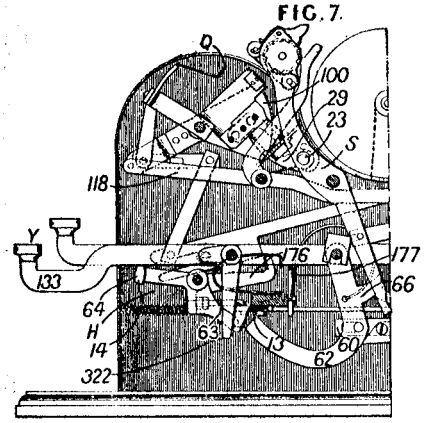

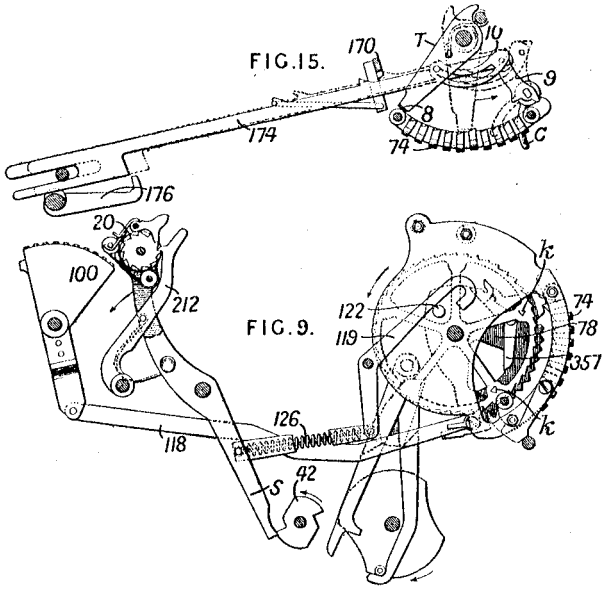

Adding-apparatus.—In machines of the type described in Specifications 7289/02 and 7290/02, a spring motor operates the parts, including the selector, the movement of which is controlled by a governor, and provision is made for operatively connecting the numeral wheels and the item-printing sectors to effect the adding and printing of the item set. A locking-device is provided for the motor and is adapted to be released by the winding-means.

Totalizing-counters. — The adding, transfer, and zeroizing mechanisms are similar to those described in the above-mentioned Specification 7289/02.

Error-levers.—To correct an error in an item set, a restoring-lever C, Fig. 15, is rocked and thereby, through an arm 9 and slotted lever 10, a bail T with a blade 8 is moved across the selector pins 74 to reset the displaced pins.

Printing-mechanism; printing totals. — The type sectors or carriers 100, Fig. 9, are connected by links 118 to the oscillating segments 78, and a platen and feed-roll are mounted on a swinging frame S controlled by a spring 126 and cam 42. The record paper is fed forward at each backward movement of the frame S by means of a pawl 212 engaging a ratchet-disk 20. The platen is carried away from the type sectors by a pin 122 engaging a hook on the end of a bar 119 connected by a link through a pin-and-slot connexion to the frame S. In order to print a total, the numeral wheels are given a complete movement, i.e. through ten units, to bring their pins *k* against dogs 357 pivoted to the segments, Fig. 23, when the dogs are set in position, so as to communicate the amount set on the wheels to the segments. If a numeral wheel is at the zero position, it is

© B O B Williams Printed22/11/2023 CalcPatents Ed. 1.doc

Werner H 12891/1912 Thomas type

12,891. Werner, H. June 1.

Multiplying and dividing apparatus; transfer mechanism.—Relates to improvements in transfer mechanism for machines of the Thomas type, and in means for preventing overthrow. The usual star-wheel operates, through a lever 6, a cam 3, sliding it along the spindle of the

---

the depression of odd keys and rearwards for even keys. Upon the return of a key the ratchet-teeth assist a spring g^3 to restore the arresting arm to its central inactive position, which is finally determined by the co-operation of a V-notch g^4 in the segment with a pin at the lower end of an arm G^3 moving with the slide-bar. In a modification, the return of the slide-bar and associated parts is effected by springs applied directly thereto. So long as the segment is undepressed, a pin f^1 thereon keeps an arm J^1 raised and therewith a spring-connected pawl j locking pins upon the receiving-pinion I^3 of the totalizing-counter, but upon depression of a key, a spring j^1 withdraws the pawl, while upon the completion of the upward or actuating movement of the segment the pawl is forced into engagement to prevent overthrow. Similar parts are provided for each denomination, but in the case of the units wheel, the arm J^1 and pawl j are rigidly connected, since the zeroizing-arrangements do not require this pawl to yield.

Transfer mechanism.—The pins of the receiving-pinions normally move forwards in opposition to the wedge-shaped faces of hooked spring-controlled non-reverse pawls K, and, in order to prevent overthrow during transfer due to the holding down of any key of the higher bank and the disablement thereby of the ordinary overthrow-preventing pawls, displacement of the non-return pawls during forward movement of such pinion is rendered impossible by means of a pin g^8, upon an arm moving with the arresting-arm g^2, which remains above suitable surfaces k^2 upon a rearwardly-projecting arm K^1 in one with the non-reverse pawl.

© B O B Williams Printed22/11/2023 CalcPatents Ed. 1.doc

Wesley E A 13550/1890 £sd Adder

13,550. Wesley, E. A. Aug. 28.

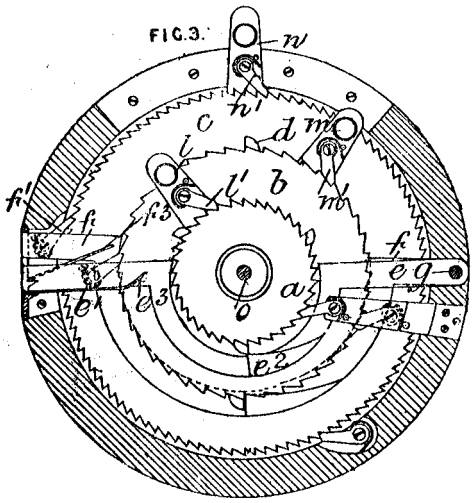

Calculating - apparatus. — Relates to arithmometers. Fig. 3 shows a plan of the apparatus with the cover removed. Pence, shillings, and pounds indicating wheels *a*, *b*, *c* with ratchet teeth are superposed upon a central axis *o*, and can be advanced by separate handles *l*, *m*, *n*, with pawls l^1, m^1, n^1, and indexes not shown, which move over an external ring of figures. Shillings and pounds are carried from the pence and shillings wheels by means of curved levers *e*, *f*, pivoted at *g* on one side the case and provided with pawls e^1, f^1, engaging the shillings and pounds wheels on the other side. In the bowed parts these levers are provided with cam inclines e^2, which are wiped by extra teeth *d* on the wheels, after the escape of which the levers are forced back by springs e^3.

Wesley E A 5834/1892 Disc adder

5834. **Wesley, E. A.** March 26.

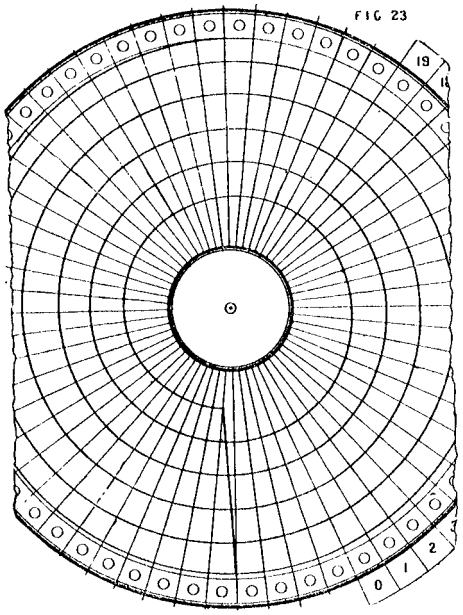

Calculating - apparatus.—Relates to adding-machines, and consists of a disc having successive numbers or values marked on it spirally or in circles within an outer corresponding ring of pits, slots, studs, or teeth. Successive numbers from 1 upwards are marked on the base-board opposite the pits or teeth, and addition is performed by inserting a style into the pit against the required item and then turning the disc till the style is brought to the zero mark.

Weston H V P 10482/1910 Slide rule for trig

10,482. Weston, H. V. P. April 28.

Slide-rules.—In addition to scales for logarithms of numbers, of trigonometrical and exponential functions, and of logarithms of numbers, a slide rule is provided with a scale for the values of log. cot. $(45° + \theta/2)$. Upon the stock A, Fig. 1, are scales of logarithms of logarithms a, b, logarithms c, d, and upon the front of the slide B are other scales of logarithms e, f. The back of the slide is provided with a scale g, Fig. 2, of the logarithms of tangents of angles from $\tan^{-1}\cdot1$ to $\tan^{-1}10$, a scale h of logarithms of sines of angles from $\sin^{-1}\cdot01$ to $\sin^{-1}1$, and a scale j indicating the logarithmic values of the function cot. $(45° + \theta/2)$ or its reciprocal between the limits $\theta = \cdot1$ degree to $\theta = 90$ degrees. For the purpose of ascertaining actual numerical values, a scale of equal parts is provided. The rule is especially adapted for calculating the hour-angle or azimuth of a heavenly body.

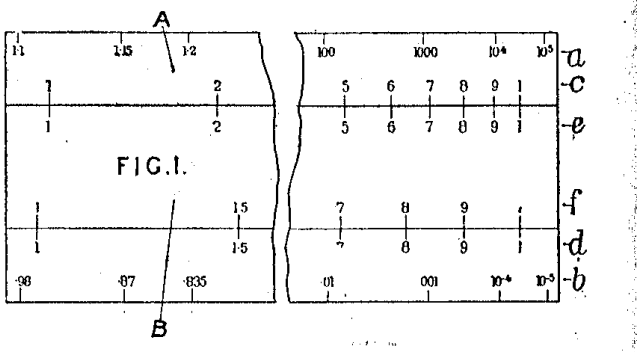

FIG. 1.

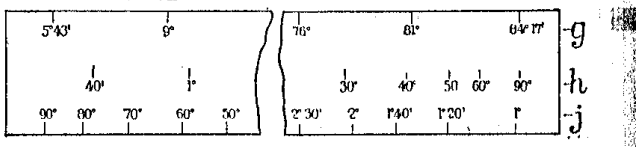

FIG. 2.

Weston R E 5387/1903 Adder for bridge scoring

5387. Weston, R. E. March 7.

Calculating apparatus for adding, especially suitable for marking in the game of 'bridge.' The total is shown by a hand or hands revolving on a dial or dials. Preferably two concentric hands, geared together in a similar manner to the hands of a clock, are mounted on a spindle a^1, one hand, b, to record units, and the other, c, to record hundreds. In the form of the invention shown, the unit hand b and a subsidiary hand a are mounted on the spindle a^1, as follows:—The hand b is fixed to a sleeve b^1, Fig. 3, which also carries a ratchet-wheel b^2 adapted

FIG. 1.

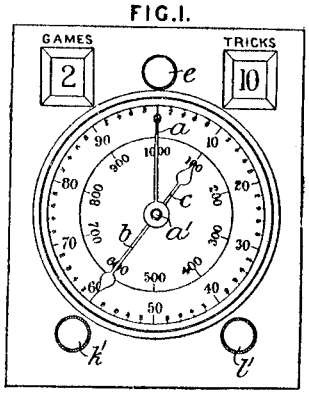

FIG. 3.

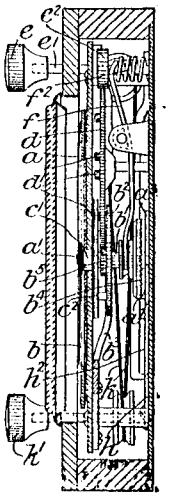

to engage with a retaining-pawl b^3; the hand a is fixed to the spindle a^1, which also carries a toothed disc a^2 and a heart-shaped cam a^3. A pivoted lever h, controlled by a spring h^2, bears against the cam a^3. A toothed disc b^4, mounted on the sleeve b^1, turns with the sleeve, but is also free to move along it. This disc is normally caused to engage with the toothed disc a^2, by means of a pivoted lever f, controlled by a spiral spring f^2 on the spindle e^1 of a milled thumb-nut e. In operation, the milled nut e, when turned by hand, drives a pinion b^5 on the sleeve b^1, through a pinion c^2 and spur-wheel d, so that the hands a, b are turned together through the same angle, while the lever h is turned against its spring h^2 by the cam a^3. The hand b is retained by the pawl b^3, while, by depressing the nut e, the lever f is caused to lift the disc b^4 out of engagement with the disc a^2, the hand a turning back to zero, by the action of the spring-controlled lever h on the cam a^3. By this means, each time the subsidiary hand is moved from zero to some number on the dial, that number is added to the total shown. The hundreds hand c is fixed on a sleeve c^1, which also carries a star-wheel c^2, mounted on the sleeve b^1. The star-wheel is turned by pins d^1 on the wheel d. A retaining-pawl is adapted to engage with the wheel c^2. An endless band k, Fig. 3, and a similar band, not shown in the Figure, are turned by thumb-nuts k^1, l^1, Fig. 1, for marking the games and tricks. The hands may be replaced by dials partly visible through apertures in the face, and the subsidiary hand may be returned to zero by hand, instead of automatically, if desired.

Weyrs F S Fleshman J R & Duhring W J 3213/1904 Tab calc Wages

3213. Weyrs, F. S., Fleshman, J. B., and **Duhring, W. J.** Feb. 9.

Calculating - apparatus. — Apparatus with figure-bearing tapes for multiplying two factors, and also producing several other numbers having definite ratios to the product, is described for a wage-calculating machine giving the products of the rate per hour, and the time, time-and-a-quarter, time-and-a-half, and time-and-three-quarters respectively. The machine has a central spindle 3 for driving a gear-wheel 4, which can directly rotate the eight drums situated on its periphery, as 33, by means of pinions 9, and the two more distant drums 21, 22 through the train shown. These drums carry the tapes 23, 31, 36, 39, 42 in pairs, and any movement of the hand-wheel 7, attached to the projections 8 of the gear-wheel, results in winding as much of the tapes on to one set of drums as is unwound from the other set, the spring-held rollers 24, 30, 43, 44 being provided to keep the tapes taut. The drums 21, 22 carry only one tape, which is set by the wheel to indicate through the window 80 the number of hours worked, and the multiple parallel tapes upon the lower drums then exhibit the value of this work according to the prices on the fixed scale 81^1, the corresponding figures visible in the three slots 82^1, 83^1, 84^1, 85^1 being in the proportions stated above, respectively. Fig. 7 shows a locking-device for the hand-wheel 78 and the driving spur-wheel 49 to which it is fast. Normally the spring 81, surrounding the fixed spindle 50, between the collar 82 and the wheel 49, which is loose upon the spindle, forces the latter against a second collar within the housing 77, and prevents accidental movement. To turn the hand-wheel, it is pulled out, a thumb-piece 83 being provided on the end of the spindle to facilitate this. If two or more rows of numerals are placed on each tape, they may be distinguished by different colouring.

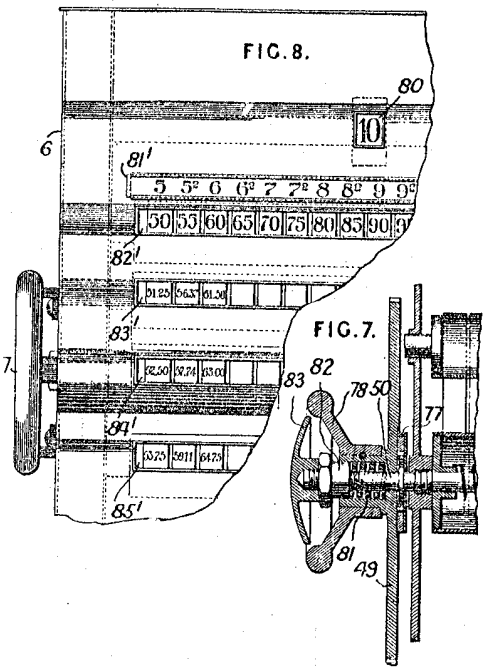

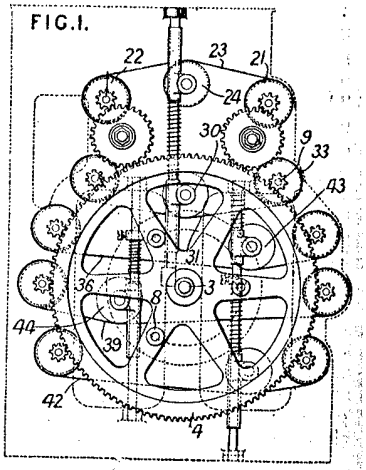

Wheat F 24565/1911 Adder for avoirdupois values

Specification 17,126/93 are adapted to compute according to the avoirdupois table of weights by a modification of the transfer mechanism associated with three wheels of a set of accumulating wheels, so that the intermediate wheel can effect a carry or transfer to a wheel of lower denomination, as well as to the higher wheels in the ordinary way, provision being made for a double or two-step transfer to the lower wheel. The denominations affected in the present instance are the quarters, and tens and units of pounds, the units of pounds wheel 916^a having ten teeth and carrying to the tens-of-pounds wheel in the usual way. Additional transfer operations are necessary when (1) the '2' key in the tens position is depressed after the registration of '8' in the units position and vice-versa, (2) when the '1' key in the tens position is depressed three times in succession, the numeral standing on the units wheel being '8' or less, and (3) when the '9' key in the units position is depressed, the wheels having already registered 19 pounds. (1) The rack of the units wheel has a slot *b* which is double the length of the usual one in order to allow a two-step movement to the units wheel. The transfer pawl 413^a for the lowest denomination is displaced or rocked by a finger A mounted on a rock-shaft B which is rocked by means of arms C, D adapted to engage a cross-head B^2 mounted on an arm of the shaft B. The movement of the arms C, D is controlled by the units and tens wheels respectively, and the arm C is normally out of contact with the cross-head B^2, but when the units wheel registers '8,' a pin c^2 on a cam-disk 912^a engages the eccentric part c^1 of the arm C and moves it into contact with the cross-head. Registration of '2' on the tens wheel causes pins *d* thereon to move the arm D and thereby rock the cross-head about the arm C, and consequently rock the shaft B and finger A, thus releasing the pawl to allow the units wheel to advance two steps. This movement of the units wheel to the zero position then advances the tens wheel to zero. (2) When the tens key '1' is depressed in succession, the finger A is rocked by means of an extension D^1 on the arm D which is set so as to rock this shaft only after '2' has been registered on the tens wheel. (3) To ensure a two-step advance of the tens wheel after depressing the '9' key, the tens rack is provided with a slot *e* equal in length to the slot *b*, and a pawl E is provided to limit the rise of the rack to one step when necessary. The pawl E is pivoted concentrically with the pawl 413^b, and is normally held against the forward end of the pawl. The pawl E is adapted to be rocked by means of an arm 413^g, which is pivoted to the pawl at e^3 and to the framework at *f*. The rearward swing of the pawl 413^b rocks the pawl E, and thereby moves the foot of the arm 413^g into the path of the cam 912^a, which rocks the arm and swings the pawl E away from the pawl 413^b, allowing the corresponding rack to rise to the full extent.

Varying functions of machine.—The machine is split between certain denominations by omitting the overlapping tails of the units of tens,

© B O B Williams Printed22/11/2023 CalcPatents Ed. 1.doc

White Adding Machine Co 24026/1914 Adder

24,026. **Fairbrother, H.,** [*White Adding Machine Co.*]. Dec. 14.

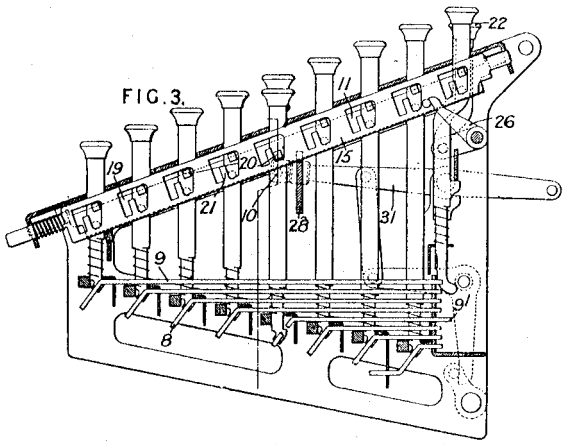

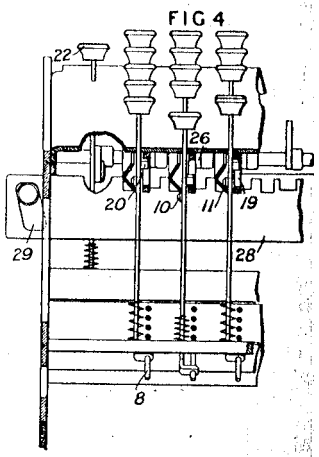

Adding-apparatus; keyboard interlocks.—The keyboards are constructed so as to be convertible from the flexible to the locked type, or vice versa. In the flexible form, a pro 10 on the plunger key-stems displaces, pression, a spring-mounted shutter 11 o

610

White & Bean 10231/1907 Area calculator

10,231. White, R. H., and Bean, M. B. May 2.

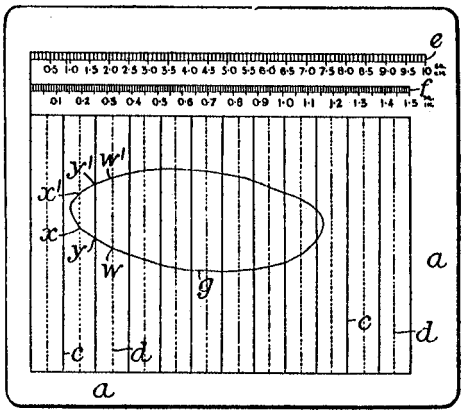

Calculating-apparatus.—A device for measuring the area of plane figures consists of a ruled transparent grating *a* provided with one or more scales *e*, *f* of areas. The scales are made by adopting as unit area the reciprocal of the constant distance between any two adjacent ordinates *c*, *d* expressed in the corresponding linear units. The device is placed as shown on the figure *g*, the area of which is required. The total length of the intercepted portions $x\,x^1$, $y\,y^1$, $w\,w^1$ is then ascertained in any convenient way, and this length applied to the relevant scale *e* or *f* gives the area required.

50

White & Cook 15356/1915 tab calc anti aircraft guns

15,356. White, F., and **Cook, J.** Nov. 1.

FIG.1.

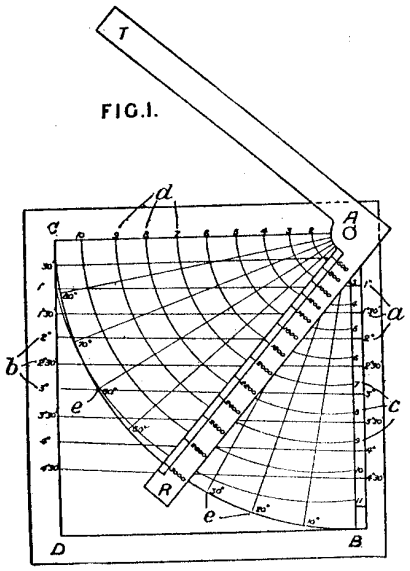

FIG.2.

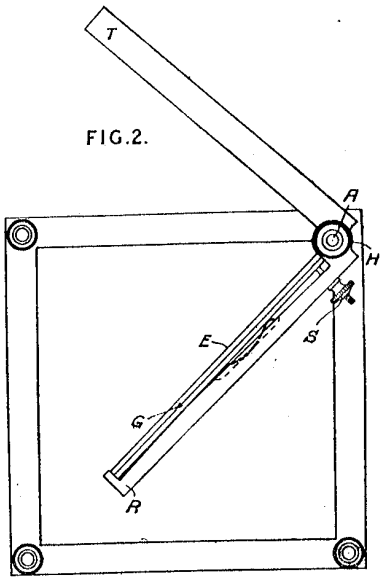

Tabular-calculators.—Relates to sighting-apparatus for high-angle or anti-aircraft guns, of the kind in which a pivoted range arm is set in relation to a polar chart, at an angle corresponding to the angle of elevation of the target, to enable sighting-correction angles or fuse-timings to be read from the chart for any range and angle of elevation. The invention comprises an arrangement in which vertical-lead corrections for a moving target are effected by means of an adjustable connexion between a sighting-arm and the pivoted range arm, in conjunction with an adjustable connection between the pivoted range arm itself and the range scale member carried thereby. In known apparatus, as shown in Fig. 1, the sight arm A, T is rigidly connected to a range arm A, R pivoted at A in relation to a chart ABCD on which angles of elevation of target are indicated by radial lines Ae, whilst sighting-correction angles, as shown by the lines or curves *a*, *b* for various ranges and angles of elevation of target, are determined by plotting. Fuse-timings under similar conditions are indicated by the curves *c*, *d*. If the graduated range arm A, R is set to the angle corresponding to the angle of elevation of target, the correction for tangent angle of elevation and also the fuse timing for a particular gun and shell are determined from the position on the chart of the gradua ion on the arm A, R corresponding to the known range. According to the invention, as shown in Fig. 2, in order to introduce a vertical-lead correction for a moving target, the sight arm A, T is adjustably set in relation to the range arm A, R by means of a clamping screw H, while a further correction for the variation in lead, according to range and angle of elevation, is obtained by means of a pivotal connexion G between the range scale member E and the arm A, R, the position of the member E being adjusted by

665

Whitehead E A 22214/1901 Piston performance

22,214. Whitehead, E. A. Nov. 4.

Indicating and registering movements of reciprocating parts of mechanism; calculating-apparatus.—Consists of means for recording upon one register or counter the sum of the travels of the pistons of direct-acting duplex pumping and other engines. Two rods, each reciprocated from one of the pistons, are connected by links B, B^1 and B^2, B^3 respectively to friction-ratchet arms engaging two wheels F, G which form part of an epicyclic train. The wheel G and a wheel J geared to the recording-instrument are loose on the shaft D, and gear with mitre-wheels M, M^1 carried on a hub H fast on the shaft. The wheel F is fast on the shaft. Each of the wheels F, G revolves in one direction whatever the motion of the corresponding piston, and the direction of rotation of one wheel is opposite to that of the other. In order that the wheel J may be moved equally by equal movements of both pistons, the connections between the links B &c. and the ratchet arms are adjustable by means of a pin and slot or otherwise so that the wheel F receives half the movement of the wheel G. In a modification, the epicyclic train comprises spur-wheels only, and no mitre-wheels. The lower pawls are held up to their work by springs or by counterweights. In a modification, nipping-levers are used instead of pawls. The recording-apparatus preferably registers feet and inches, the inches being shown by a pointer on a dial.

FIG. 3.

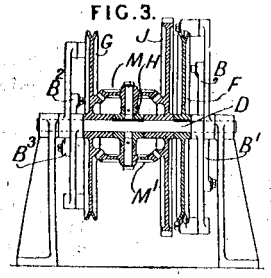

FIG. 1.

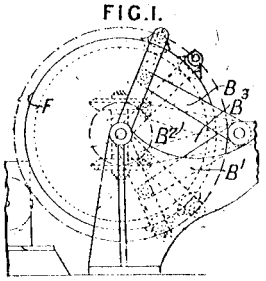

Whiting W R G 21955/1907 Planimeter

21,955. Whiting, W. R. G. Oct. 4.

Calculating - apparatus. — A planimeter of the type in which a frame is moved parallel to one of the co-ordinate axes, while the tracing pointer is moved relatively to the frame in a perpendicular direction, is shown in plan in Fig. 1. The frame A travels upon three wheels B^1, B^2, B^3, of which the first drives an integrating-disk F which is so mounted upon a vertical spindle as to rest by its own weight on the travelling wheel. A pointer C

FIG. 1.

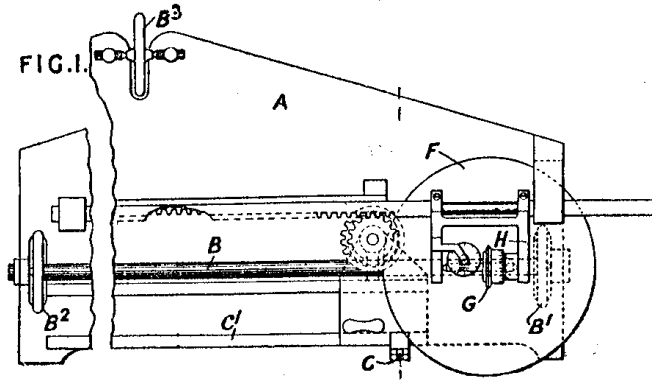

Whyman J J & Ross J A 9088/1915 Add angles Artillery

9088. Whyman, J. J., and **Ross, J. A.** June 21.

Adding and subtracting apparatus.—A circular device for adding and subtracting angles, for use in determining the "battery" angle when laying guns on concealed positions, comprises a base-disk *a* graduated in degrees from zero to 180 degrees, running both clockwise and counter-clockwise, as shown, and a superposed rotatable disk *b* graduated from zero to 360 degrees in a clockwise direction. The device enables the difference of two angles to be determined mechanically, and to be expressed either directly, or by its defect from 360 degrees in those cases where it exceeds 180 degrees.

FIG. 1.

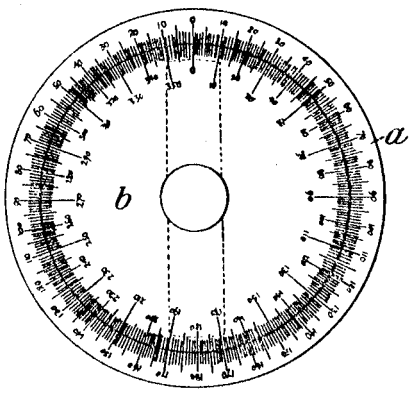

Wiberg K E & Berndes G F 6546/1893 Adder

6546. Wiberg, K. E., and **Berndes, G. F.** March 28.

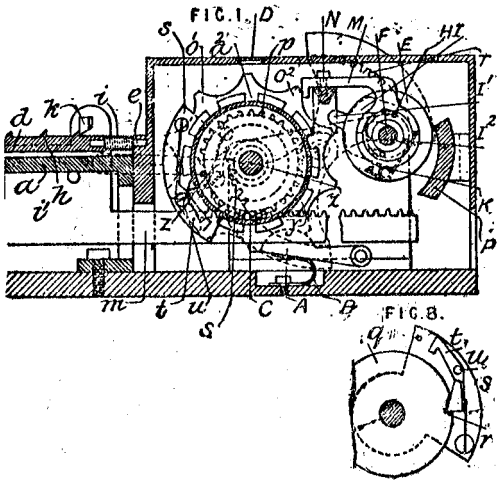

Calculating-apparatus.—On the top *a* of the left part of the case are hinged a series of plates *d* divided by heels *h* into spaces numbered 0, 1, 2, 3, &c. to 9. The plates correspond to units, tens, hundreds, &c. numbering-wheels C, loose on a transverse shaft Z in the right half of the casing, and having one face formed by a notched disc *y*, the other by a wave disc o^1, which is engaged by a corresponding pawl A with spring B. To add a number, the proper hinged plate *d* is depressed in opposition to erecting springs *i* on the pivots *e* by pressing a style on the space marked with the required digit. A slide i^1, projecting through a slot at the side of the hinged plate, is then pulled out by a spring till a lug *k* on it strikes the style, when, the latter being removed, the slide remains with the lug *k* against the next heel *h*. As this occurs, a rack extension *m* of the slide i^1 turns a spur-wheel *p*, with which it gears, and an attached disc *q*, Fig. 8, so that a single notch *r* in the periphery of the disc is carried away from the tail of a pawl *t* previously pressing it. The pawl is pivoted at *u* on a sector *s* loose on the shaft *z* between the spur-wheel and attached disc *q*. The head of the pawl becomes thus engaged in a notch a^2, of the disc o^1, and also comes in the path of a tooth on a disc fast to the shaft Z. A single rotation is then given to the shaft Z by means described below, and the numbering-wheel is thus carried round till the engaging pawl *t* is tripped off it and the driving-disc by again coming to the notch *r* in the disc *q*. The required sum is then visible through an aperture D over the wheels. The carrying connection between the wheels is as follows:—A shaft F parallel to the shaft Z carries in the same plane with each wave-wheel o^1 a plate I slotted over the shaft and over two pins H on a disc E adjacent and fast on the shaft. The plate I is urged by a spring K to project its nose I^1 beyond the circumference of the disc E, but is normally prevented by a collar which lies loose on the shaft inside a pin I^2 on the rear of the plate. In the carrying operation a lug o^2 on the wave disc of the units wheel causes a lever M pivoted at N to shift the loose collar free of the pin I^2, whereupon the spring K projects the nose I^1 into engagement with the wave disc of the tens wheel. The shaft F is then rotated and the transference occurs by the nose I^1 passing the opposing spur of the tens wave disc. After this, the nose I^1 passes a fixed cam P and the plate I is thereby thrust back. The two shafts Z and F are rotated by means of a handled double sector S, T pivoted between them and engaged with pinions on them. The slides i^1 are returned to zero by a push-block with handles. To prevent the numbering-wheels advancing too far owing to inertia, each pawl *t* may be replaced by a pair, one of which, on regaining the notch *r*, springs spontaneously off the fast disc and the numbering-wheel, while the other remains engaged with the numbering-wheel till a second tooth on the fast disc trips it.

Wilcox R 18423/1892 Ready Reckoner

18,423. Wilcox, R. Oct. 14.

Calculating-apparatus.—Relates to a ready-reckoner in the form of a table, mounted on wood, exhibiting, as shown, in columns the cost of pounds and ounces under different prices.

FIG. 1.

d	4½d		5d		5½d	
oz.	lb.	oz	lb.	oz	lb.	oz.
¼	/4½	1 ¼	/5	1 ¼	/5½	1 ¼
½	/9	2 ½	/10	2 ½	/11	2 ½
¾	1/1¾	3 ¾	1/3	3 ¾	1/4½	3 ¾
1	1/6	4 1¼	1/8	4 1¼	1/10	4 1¼
1¼	1/10½	5 1¼	2/1	5 1¼	2/3½	5 1¼
1½	2/3	6 1½	2/6	6 2	2/9	6 2½
1¾	2/7½	7 2	2/11	7 2¼	3/2½	7 2¼
2	3/	8 2¼	3/4	8 2½	3/8	8 2½
2¼	3/4½	9 2¼	3/9	9 3	4/1½	9 3¼
2½	3/9	10 3	4/2	10 3¼	4/7	10 3¼
2¾	4/1½	11 3¼	4/7	11 3½	5/0½	11 3½
3	4/6	12 3½	5/	12 3¾	5/6	12 4¼
3¼	4/10½	13 3¾	5/5	13 4¼	5/11½	13 4¼
3½	5/3	14 4	5/10	14 4½	6/5	14 4½
3¾	5/7½	15 4¼	6/3	15 4¾	6/10½	15 5¼
4	6/	16 4½	6/8	16 5	7/4	16 5½

Wilkinson F A,Gibson C C & Reiss F E 17306/1899 Watch case adder for £sd

17,306. Wilkinson, F. A., Gibson, C. C., and **Reiss, F. E.** Aug. 26.

Calculating-apparatus.—The apparatus is in the form of a watch case having dials *b*, *b*¹ at both sides and sets of pointers *n*, *o*, *s*, *n*¹, *o*¹, *s*¹ geared together so as to set up certain individual amounts, for example, sums of money in pence, shillings, and pounds respectively. The spindle *h*, turned by the milled head *i*, is in permanent gear through bevel-wheels *g*, *f* with the spindle of the pence spindle *d*, while the pence spindle *e* can be brought into gear at will by pressing a button on the push-rod *l*, and so moving the bevel-wheel *k* into engagement with the bevel-wheel *g*. In use, for adding, the items are set up in succession on the dial *b*, and the pointers *n*, *o*, *s* returned to zero after each setting; the wheels *g*, *k* are thrown into gear only during the setting up of the amounts, being disengaged during the return movement. Consequently, at the end of the operation, the pointers *n*¹, *o*¹, *s*¹ show the sum of the amounts. The apparatus can be used also for subtraction; it may be slightly modified in detail, and recording-markers may be fitted to the pointers to trace records on paper sheets.

FIG. 1.

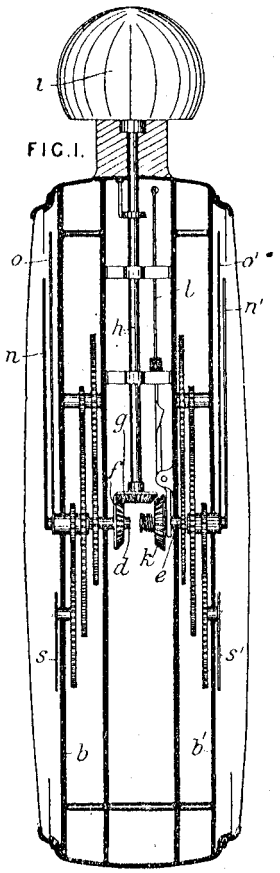

2

Williams P L A 21887/1905 Plate & rule for ratios

21,887. Williams, P. L. A. Oct. 27.

Calculating - apparatus. — Apparatus for computing ratios or other quantities consists of a graduated plate D mounted on a rule, along which can be slid a frame G containing a transversely-sliding bar N so that a mark on the bar N can be set to any of several lines of graduations on the plate D. The plate D may rest in a groove or slot in the rule, or it may be pivoted so as to expose one of several sets of graduations. Holding-pieces R may be placed at the ends of the rule, those at one end being removable. The frame G is attached to a block F slidable by knobs in a groove in the rule, and the frame may slide in the block so as to allow fine adjustment by a screw L^1. Stops V at the ends of its groove limit the motion of the block F and frame. The frame G is steadied by a lug on it engaging a small groove H towards the bevelled edge of the rule, and an extension K of the frame projecting over this edge carries one or two marks. The bar N can be slid in the frame parallel to the bevelled edge of the rule, either by a knob as shown, or by a screw or other means, and carries an indicating-piece bearing one mark. The graduations shown comprise longitudinal lines, marked for percentages or degrees of slope for example, crossed by lines radiating from a point outside the rule. The apparatus is applicable for surveyors', engineers', and other measurements, and for altering distances between points on paper in a given ratio. Specification No. 90, A.D. 1866, is referred to.

FIG.1.

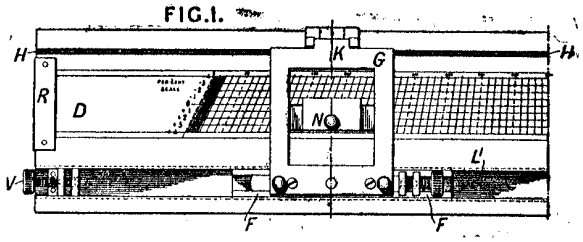

Williams R N 2384/1915 Alpha punch card

2384 Williams, R. N. Feb. 15.

Statistical machines. —Each perforation in the card represents three letters of the alphabet, the preferred arrangement being that shown in Fig. 1, and additional holes are provided for choosing the second or third of the letters. For use with such cards of a machine such as is described in Specification 26,896/13,

FIG.1.

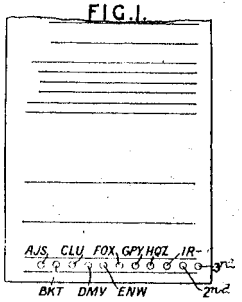

FIG.2.

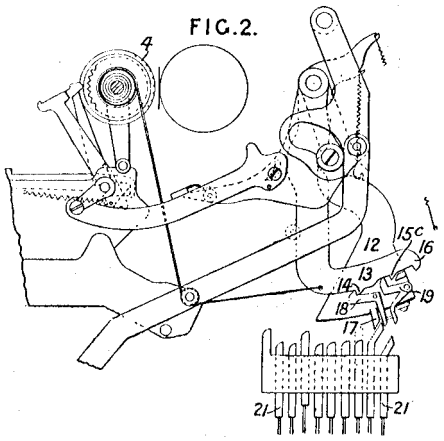

the spring-controlled swinging member 13 which effects the setting of the type drum 4 has three projections 14, 15c, 16. A sector 12 for allowing additional movement to the member 13 carries a stop 17 and bell-crank levers 18, 19, which coact with the projections 14, 15c; the levers are so coupled that the lever 18 can act alone, but the lever 19 cannot be tripped without also tripping the lever 18. If the first letter is to be printed, the stop 17 operates; if the second letter is to be printed, the corresponding control pin 21 trips the lever 18 and allows a slight additional movement to the type drum; while if the third letter is required, the end pin 21 trips the lever 19 and allows a further additional movement.

Williams R N 3829/1915 Add punch cards

Williams, R. N. March 10.

tical machines.
ines for adding
as of perforated
resenting cards
vided with key-
for operations
dent of the
The invention is
d with reference
tric machines of
llerith type, and
mechanical ma-
of the Powers
In the electric
e, Fig. 1, the
s for the adding-
tus are controlled
s 11; depression
ey makes contact
conductor 21 and
closes a circuit
h a conductor 12,
y 1^a, and a resist-
20 to operate a
t 22, which locks
yboard. The key
makes contact
gh a contact 17,
is moved upward
it engages the de-
d key; this closes,
gh a contact rail
nd conductor 13,
ircuit of a relay
et 5 for the add-
apparatus, which
becomes operated
a cam 3 breaks
ain circuit. As an
ative construction,
rail 16 may be coupled direct to the
ry 1^a, and the conductor 21 with the
s; in this case, only one moving contact
ould be required for a number of denomi-
ns. In a modified construction, the con-
17 is replaced by a rotating switch, around
h the various contacts connected to the
idual keys are grouped. The keys, on
ession, make contact in a mercury cup and
become locked, the unoperated keys in
bank being simultaneously locked. In the
hanically-operated machine, Fig. 7, the key-
rs 38 operate stops 40 for the projection
non the swinging sector, and have lateral

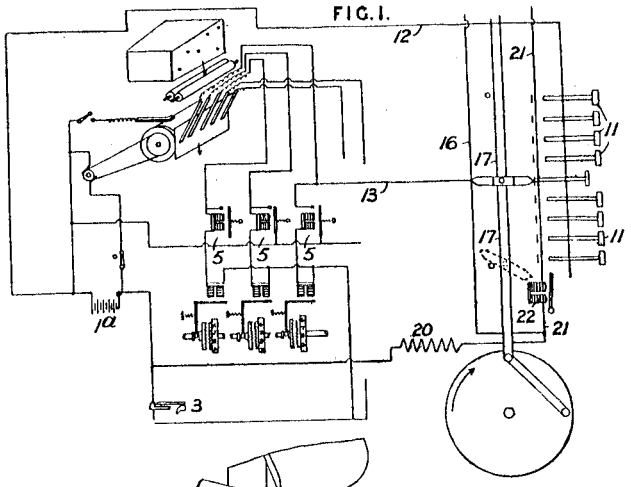

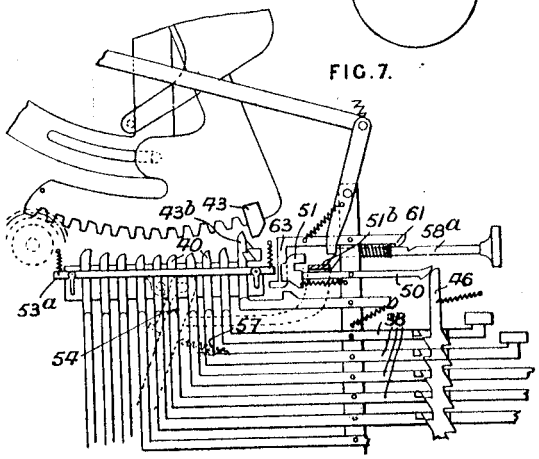

projections which operate a locking bar 46; this bar engages under a latch upon a lever 50, which is provided with a slide 51. The depression of a key brings the slide 51 opposite a plate 51^b carried by a push-button 58^a and thus causes a zero-stop 43^b to be retracted. To render the retractor bar inoperative during the setting-up by the keyboard, their operating-bars are hooked and are normally held in-operative by a spring 57; depression of the push-button 58^a causes the hook to be engaged. When the retractor bar 53^a is depressed, a lever 63 is operated which releases the push-button 58^a from a catch 61.

Williams-Ellis M I 13887/1915 Circ slide rule for artillery

13,887. Ellis, M. I. Williams-. Sept. 30.

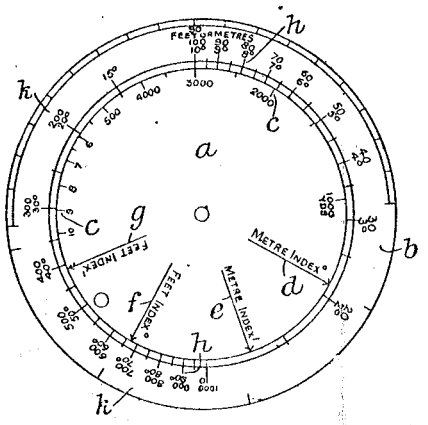

Slide-rules, preferably of the circular type, for use in determining the angle of sight between gun and target, or for like purposes in artillery work. An upper or inner disk *a*, provided with a logarithmic range scale *c*, is rotatably mounted upon a base *b*, preferably also circular in form, and provided with a pair of superposed logarithmic scales, one *h* representing angular measurements, the other, *k*, feet or metric measurements. To use the device, the range indication on the scale *a* is set opposite the scale *k* graduation corresponding to height or difference of contour, the angle of sight then being shown in degrees or minutes on the scale *h* by means of feet or metre indexes *d*, *e*, *f*, *g* on the disk *a*. The periphery of the disk *b* may be formed into a protractor, or as a scale for map measurements.

Willis E J 3186/1895 Planimeter Indicator diagram

3186. Willis, E. J. Feb. 13.

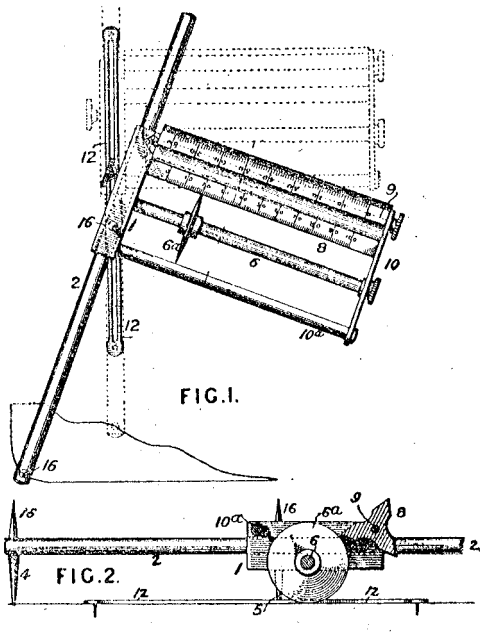

Calculating apparatus.—Relates to a planimeter and accessories more especially for reading indicator diagrams. The frame 1, 10, 10^a carries a spindle 6 on which freely slides and turns the disc wheel 6^a. A rod 2, sliding in guides in the frame at right angles to the spindle 6, can be adjusted and clamped, so that the spikes 16, 16, one on the frame, the other on the rod, are separated by the length of the diagram. The frame may be pivoted below the former spike to a long rod pivoted at its other end on the board to which the diagram is secured, but as shown in the Figures, a slotted bar 12 receives a pin 5, and acts as a guide. Below the spike on the rod 2 is a tracer 4. Allowing for no lateral slip on the part of the wheel 6^a, it can be shown mathematically that its displacement along the spindle 6 is proportional to the area of the diagram over the perimeter of which the tracer is passed. Several interchangeable scales 8 are provided, mounted on a spindle 9, the one to be brought opposite the disc-wheel being determined by the spring used in taking the diagram. The reading on the scale is the mean effective pressure. To avoid calculations when it is desired to read the horse-power directly from the scale, two pivoted scales somewhat similar to proportional compasses are employed in connection with tables of data as to diameters of cylinders, stroke, revolutions per minute, &c. These pivoted scales enable the user to at once set the spikes 16, 16 at the proper distance apart for the modified reading.

Wilson E 14533/1902 Slide rule watch type

14,533. Wilson, E. June 30.

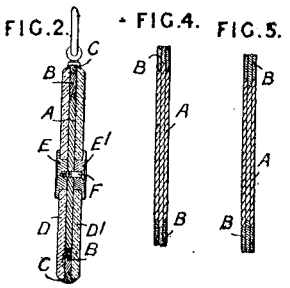

Calculating-apparatus.—A disc A and ring B, Fig. 2, provided with calculating-scales printed or engraved on one or both sides of each, are secured between the glass or like discs D, D¹, upon which are engraved radial lines serving as cursors. The ring B is enclosed by an outer ring C. The discs are held together by the nuts E, E¹ and the screw F. The apparatus is used by holding the nuts E, E¹ between the finger and thumb, and turning the disc A relatively to the ring B. In the modifications shown in Figs. 4 and 5, the glass discs and the outer ring are omitted, the disc A being made of three thin discs cemented together. The middle disc of the three is made larger or smaller than the outer discs, so as to form an annular projection or recess, which enables the disc to be fitted to, and rotate in, a suitable outer ring B built up, like the disc A, of three rings cemented together.

Peter Hopp notes this was the Halden's Calculex [Hopp.Peter, 2000 #117] and kindly provides this picture



Wilson J 7823/1905 Tab calc cards

7823. Wilson, J. April 12.

Calculating-apparatus.—Circular cards for determining interest and discount upon sums of money are marked along their peripheries, are of increasing diameters, and are superposed and centrally pivoted so as to display the markings as shown. Each card deals with monetary values of a certain denomination, giving the interest at 5 per cent against the principal, and when the cards are rotated so that the principal items summed radially in an aperture make up the total on which the interest is required, the summing of the corresponding interest items gives the interest. More than one rate of interest may be marked on the cards, and distinctive marking may be obtained by the use of coloured inks.

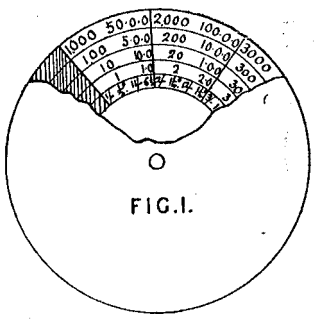

FIG. 1.

Wilson J 13528/1905 Tab calc cards

13,528. Wilson, J. July 1.

Calculating-apparatus.—Circular cards for converting measures, money values, or weights in one system into their equivalents in another system are of successively greater diameter, have markings along their peripheries, and are centrally pivoted so as to display the markings. Each set of cards deals with a particular case of conversion and each card is marked at equal angular intervals with the nine consecutive values in one system; thus the highest disk may be for units, the next for tens, and so on, the hundreds' disk for example bearing the numbers 100, 200, 300, . . . 900. To the right of each of these values is placed the equivalent value in the other system, and when the cards are so rotated that the items of the first system summed along some radial line make up a required value, the equivalent in the second system can be obtained by adding the numbers immediately on the right. The numbers in the different systems may be marked in contrasting colours.

Windle E 133577 of 1919 Trig Slide rule

133,577. Windle, E. Jan. 30, 1919.

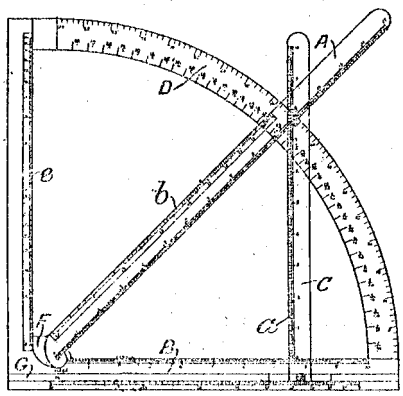

Plane-trigonometry calculators; slide-rules. — An apparatus for the solution of right-angled triangles and for use as a protractor or drawing instrument of the kind comprising a quadrant having a pivoted arm and a sliding vertical member, is provided with logarithmic as well as ordinary scales so that the sliding member may be replaced by a rule bearing a logarithmic scale to act as a slide rule. The base B, radial arm A, and sliding vertical member C are provided with similar evenly graduated scales *a* and with logarithmic scales *b*, that on the arm A co-operating with a double scale *e* to half the radius. The quadrant

D is graduated in degrees and gradients, and a groove G is provided in the base B to carry the member C or a logarithmically graduated rule. The joint F is formed as a flat knuckle joint to allow the device to lie evenly on the paper.

Winter D T 1919/1879 Planimeter weigher for skins

1919. Morgan-Brown, W., [*Winter, D. T.*]. May 14.

Calculating-apparatus for measuring and weighing skins &c., consisting of a planimeter combined with weighing-apparatus. A series of weights are hung from a spring balance over the skin or other articles to be measured, and the area is shown by the reading of the scale, a greater or less number of the weights being supported by the skin &c. The apparatus, shown in perspective in Fig. 1 and in section in Fig. 6, consists of a fixed frame A, having a series of parallel cross-bars, and of a movable frame D, preferably formed of two bars *g* connected by a series of cross-bars, from which a number of weights *e* are suspended by cords so as to hang between the bars of the fixed frame. The frame D is fulcrumed on two or more knife-edges mounted on the lower frame, as seen at g^1 in Fig. 2. It is counterbalanced by weights F, preferably placed above the fulcrum, and is connected by chains to a spring balance I, which is carried as shown by an arm K fixed to the lower frame, or is suspended from the roof of a building. The weights *e* decrease in size as they are further from the fulcrum, those nearest to it being hung lowest as seen in Fig. 2, and the spring balance is so adjusted that the pointer makes a complete revolution when all the weights are suspended freely. To enable the movable frame to be turned easily upon its fulcrum, a rod *q*, having a weight P at one end and connected at the other by a sliding rod or chain *r* to the frame, rides upon a grooved wheel S mounted on the lower frame, or is suspended by a chain, its other end being hooked to engage with a catch *u* on the lower table. On releasing the rod from the catch the weight P causes the table to rise. The material of which the area is to be determined is laid upon the lower table, and will prevent a certain number of weights *e* from passing between the parallel bars when the movable frame is horizontal, causing the pointer of the balance to move through a portion of a revolution only, and thus indicating the area on the dial, which is graduated in the direction opposite to that used for weighing.

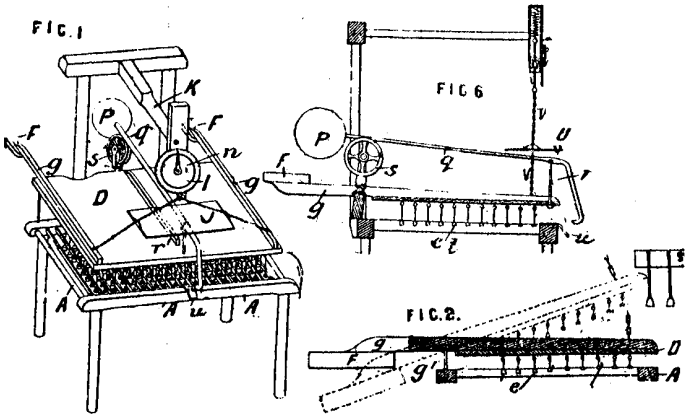

Abridged also in Classes *Leather; Weighing-apparatus.*

Wise E W 678/1895 Tab calc computing scale

678. Wise, E. W. Jan. 10.

FIG.2.

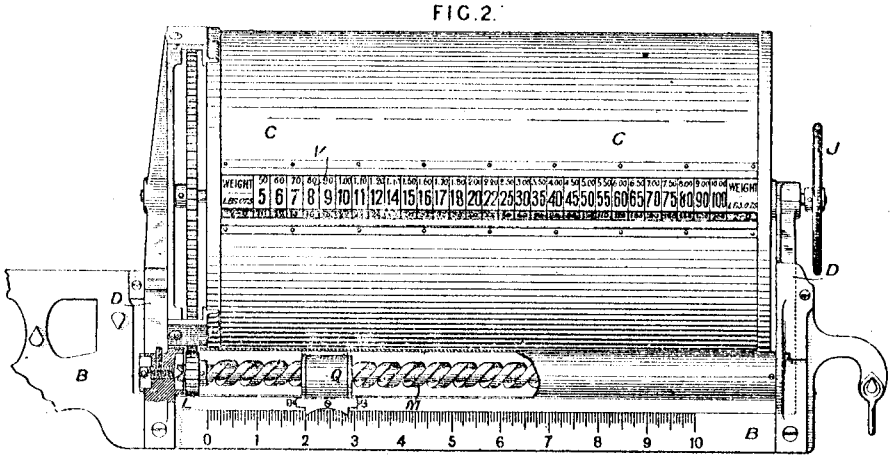

Calculating apparatus. — Relates to apparatus of the ready reckoner type. To the scale beam B of a platform or other weighing machine is attached a cylinder G pivoted on bearings D and enclosed by a suitable casing C, which latter carries a rate scale V. In weighing, a balance is obtained by rotating the hand wheel J and spur wheel K gearing with the pinion L upon the screwed spindle M and thereby moving the balance weight Q to the required position, when the price of the article can be ascertained by reading the figure of the computing-scale upon the barrel directly below the rate scale. The weight is ascertained either from the scale B or from the left hand column on the computing scale.

FIG.4.

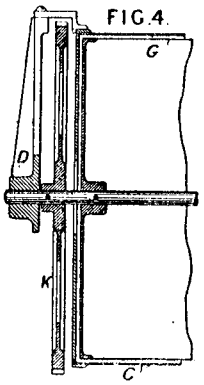

Witter E E 6327/1890 Adder

6327. Witter, E. E. April 25.

Calculating-apparatus.—Relates to the class of adding-machines which are provided with a series of keys operating upon counting-wheels. A case, formed in two parts hinged together, contains nine key levers 8, which work a slide 11 driving a ratchet numbering-wheel for units and tens behind a hundreds-wheel 19. The hundreds are carried by a U-lever 24, which is engaged in the notch 28 by a pin, and engages the face ratchet teeth 19[a] by its lug 25. The units and tens wheel has a spring check pawl 22, and the hundreds wheel has one 21, which can be pulled aside by a knob 21[a] allowing the wheel to be reset to zero by a cord 31. The slide 11 is returned after each operation by a spring 15[a].

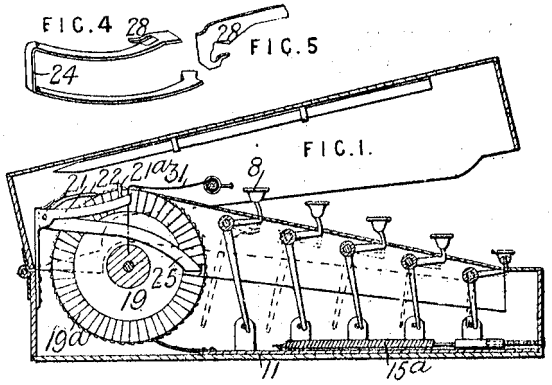

Witsell J W 16943/1912 Finger rotated adder

16,943. Witsell, J. W. July 20.

Adding - apparatus.—In machines of the kind in which the totalizer-wheels are provided with serrated edges which may be rotated by the operator's finger according to fixed setting-scales, the wheels are in the form of disks 11, Fig. 2, provided with two annular cylindrical flanges, of which the flange 12 of greater radius bears the numerals, which are observed through windows in the casing, while the flange 13, Fig. 3, of lesser radius carries the setting-notches 9 and also the transfer-teeth 15. The setting-notches extend wholly around the wheels, and project through suitable slots 31 in the casing, adjacent to the fixed setting scales.

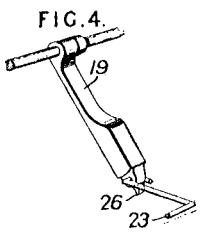

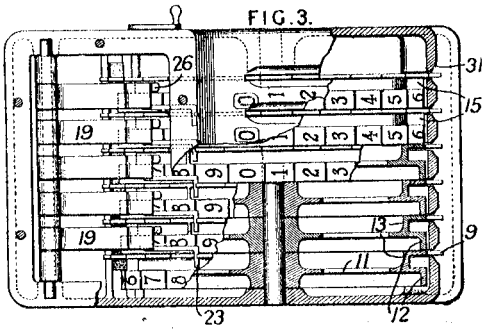

Transfer mechanism.—The transfer tooth engages a lug 26, Fig. 4, at the lower end of a lever 19 pivoted to a stationary cross-bar, thereby lifting the lever as it passes and enabling a pivoted pawl 23 thereon to feed the next higher numeral wheel through one unit, for which purpose the pawl is bent to engage

© B O B Williams Printed22/11/2023 CalcPatents Ed. 1.doc

Wolfe J C 8496/1894 Adder for typewriter

8496. Lake, H. H., [*Wolfe, J. C.*]. April 28.

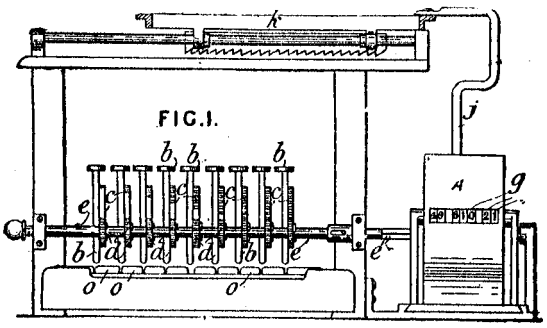

Adding machines for typewriters. Relates to the printing of columns of figures, and to adding attachments. On the keys *b* of the type-writer for printing the figures or number are racks *c* which operate pinions *d* on a shaft *e* provided with a wheel which operates the discs *g* of the adding device A. The teeth of the racks *c* vary in number according to the figure printed, and the shaft *e* is turned accordingly. The discs *g* are provided with toothed or notched peripheries, and are engaged and operated by a toothed wheel on the shaft *e*. The operating wheel is moved along the shaft *e* from one disc to another by an arm *j* connected to or operated from the sliding paper carriage *k*. An index and scale is provided having divisions corresponding to the arrangement of numbering discs and columns of figures to be printed. To prevent the operation of more than one key at a time, sliding blocks *o* are provided, which leave only enough space for the depression of one key lever at a time. Part of the shaft *e* is, preferably, movable longitudinally to move the pinions *d* out of the path of the racks *c* when desired.

Wolfe J C & Morton E W 9892/1892 Add Columns on typewriter

9892. Lorrain, J. G., [*Wolfe, J. C.*, and *Morton, E. W.*]. April 29.

Calculating-apparatus.—Relates to adding devices for the summation of columns of figures written by means of type-writers, the devices being so related to the keyboard and to the carriage of the machine that as the writing of the column proceeds, the total is continuously indicated by the index wheels of the adding apparatus. The devices are also adapted to permit of pointing off or spacing the various numerical orders of the numbers written without interfering with the operation of the adding apparatus. Fig. 1 shows the apparatus in plan view. Nine levers A pivoted on a common fulcrum rod 13 are provided at their rear ends with antifriction wheels 20, which underlie the numeral keys of the type-writer to which the adding attachment is fitted. A toothed wheel B is splined to a shaft 44, and travels step-by-step along the shaft, being coupled for that purpose with a carriage B^1 which is connected by cords 51, 51^a and differential pulley 52 with the paper carriage of the machine. A spring drum 49 pulls the carriage B^1 towards the left, in opposition to the pull of the paper carriage. The shaft 44 is adapted to turn the wheel B through one, two, or more teeth according to which of the levers A is depressed. When the paper carriage has moved far enough toward the left for the commencement of the column of figures, the wheel B, moving towards the right,

has come into engagement with the first of the recording or index wheels C, and the carriage scale indicates the denomination of the number to be written at that point. As the writing proceeds, the wheel B passes from one to another of the index wheels C, each of which is turned through the same number of teeth as that printed by the machine at the corresponding point. Carrying-wheels transfer the tens from each index wheel to that of next higher denomination, and the

FIG.1.

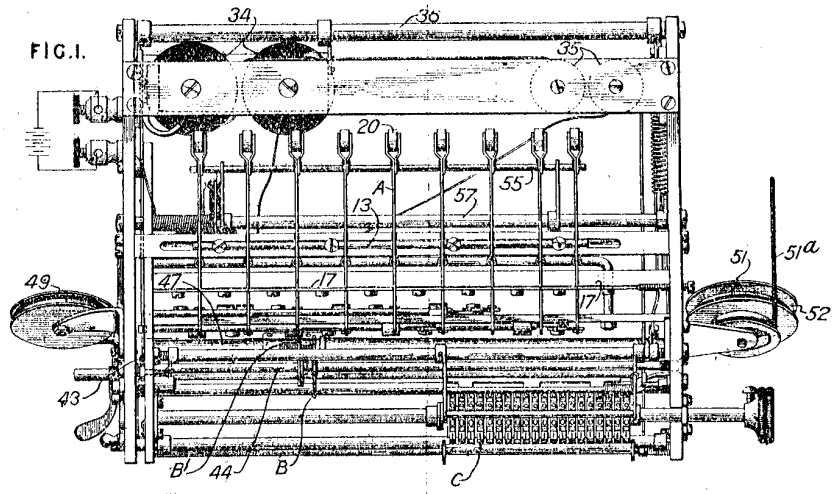

FIG.4.

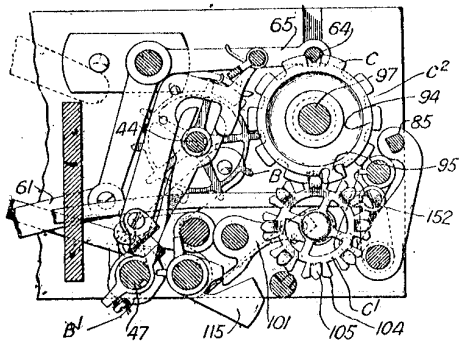

FIG.16.

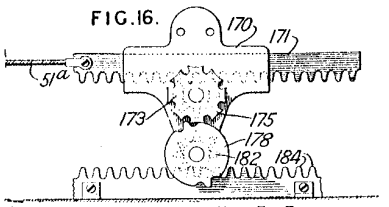

FIG.3.

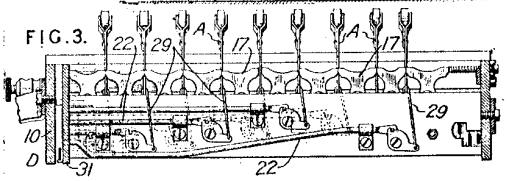

FIG.8.

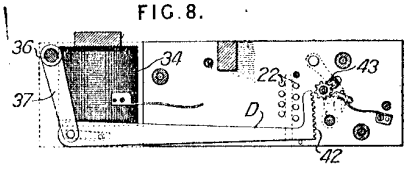

summation of the columns thus proceeds simultaneously with the writing. The device for enabling the numbers to be pointed off (thus :— 45,477.84), is shown in Fig. 16. If the paper carriage were connected directly with the cord 51a which effects the traversing of the wheel B, the printing of one of the dividing points would carry the wheel B past one of the index wheels C, and the next rotation of the wheel B would be transmitted to an index wheel of the wrong denomination. To prevent this the cord is attached to a short rack 171 guided in a bracket 170 fixed to the paper carriage. The bracket carries a pinion 182 gearing with a fixed rack 184, and as the carriage advances, the disc 178 of a Geneva movement 178, 175 is rotated so that at each fourth step of the carriage the toothed wheel 175 and pinion 173 are moved on one step, and the rack 171 draws back the cord 51a by an amount which just cancels the amount due to the movement of the paper carriage and leaves the carriage B1 and toothed driving-wheel B undisturbed. Details of the adding-machine are shown in Fig. 3, 4, and 8. The depression of the rear ends of the levers A, Figs. 1 and 3, causes the front ends to rise up between pivoted check plates 17 which have only sufficient aggregate space between them to allow one lever A to rise at a time. A link 29 is drawn upwards when a key lever is depressed, and a bolt 22 is shot into the opening between the plates 10, 31. These bolts serve to arrest at varying heights the arm D, Fig. 8, of a toothed sector 42, which is actuated by

© B O B Williams Printed22/11/2023 CalcPatents Ed. 1.doc

Wolodarsky H 14716/1904 Abacus

14,716. Wolodarsky, H. June 30.

FIG. 1.

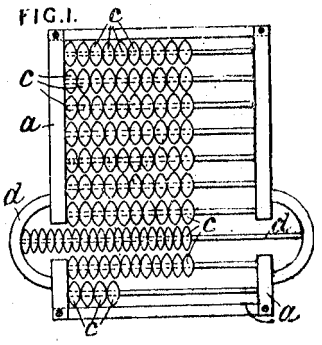

Calculating-apparatus.—A money-reckoner consists of a frame *a* having parallel wires, one for each denomination, and each having on it as many sliding beads *c* as there are units in its denomination. These beads may be made to represent coins, and the frame may either be made wider at the "shillings" wire *d* or have only ten beads on this wire and another wire for half-sovereigns.

Wolstenholme T 764/1893 Tab calc

764. Wolstenholme, T. Jan. 13.

FIG. 5.

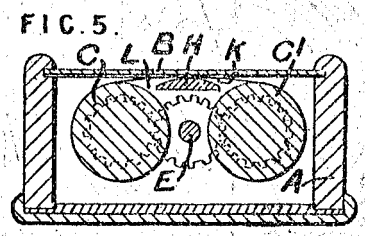

Calculating - apparatus. — Relates to ready reckoners. A box A with a glass top B contains a pair of rollers C, C1 geared with a spindle E between them having an external handle for winding a band L from one roller to the other. The band is divided into columns of amounts in money for quantities at a given rate. The quantities are shown on a card K through the glass at the side of a support H which holds the band close up to the glass. The remaining space on the card K is occupied with columns of extra charges for use in sub-dividing the unit of rate.

Wood W 15676/1887 Calc calendar

15,676. Wood, W. Nov. 15.

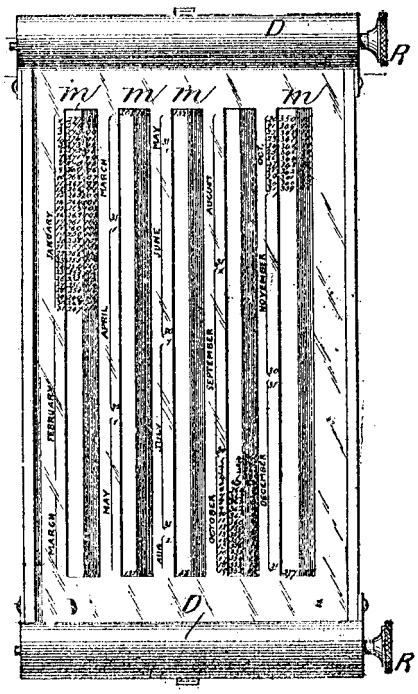

Calculating - apparatus; calendars. — Relates to apparatus for calculating the number of days between dates. A calendar is marked along the edges of a series of five slots *m* in a flat hollow case, a pane of glass being inserted in front and receptacles D, D provided at either end for rollers R, R. Between the rollers passes a strip having ten columns of figures marked thereon, which show through the slots *m*, two columns to each slot. 73 days of the calendar are marked along each slot, and the columns of figures are arranged as follows: the right hand column of the first slot on the left starts with a cipher, then 364, 363 down to a cipher, then again 364, 363 down to 293. The right hand column in the next slot starts from 292 and proceeds as the other, and so on for each right-hand column, there being the same number of figures in each column. In the left-hand columns of each slot the figures are reversed, but otherwise they are the same as the columns on the left, the ciphers being placed opposite each other. By this arrangement the number of days between two dates can be read off at once by setting a cipher opposite one of them and using the proper column according to whether the other date is past or future.

Wright W 6647/1908 Adder on typewriter

6647. Wright, W. April 1, 1907, [*date applied for under Section 91 of Patents &c. Act, 1907*].

Calculating-apparatus. — A single spring-driven differential mechanism is provided upon a typewriter, together with a number of totalizing-counters for giving separate totals. The improvements relate

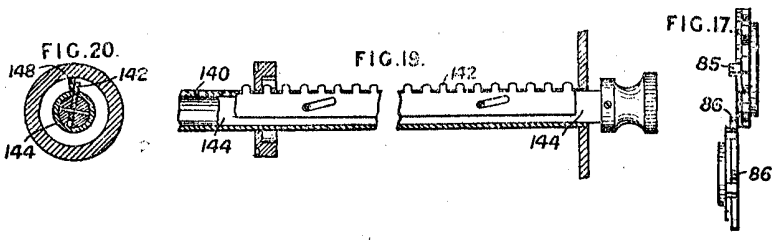

743

to the following parts: (1) the connexion with the key-levers; (2) the differential and spacing mechanisms for the master-actuator; (3) the totalizing-counters; (4) the transfer mechanism; (5) the locking-arrangements for the counter-wheels; (6) the erasing-means; (7) the zeroizing-mechanism; and (8) the driving-parts with provision for addition or subtraction. (1) Each numerical key operates a

FIG. 1.

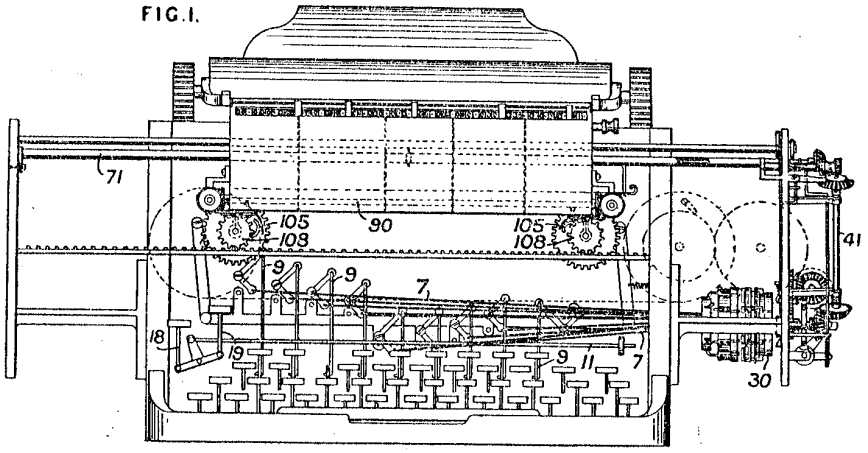

FIG. 5.

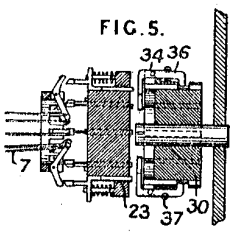

FIG. 14.

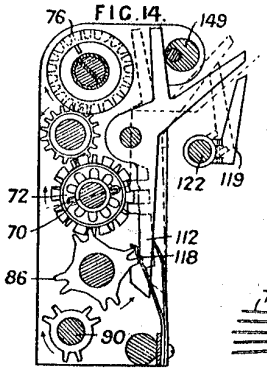

FIG. 4.

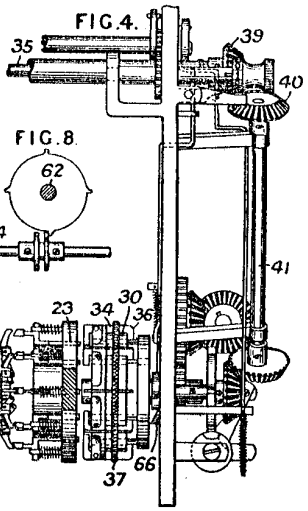

FIG. 8.

rod 7 through the linkwork shown, of which the vertical members 9 may, by means of the shift rod 11 and keys 18, 19, be engaged or disengaged from the key-levers. (2) Each rod 7 is adapted to force to the right a corresponding intermediate spring-controlled rod mounted in the fixed frame 23, and thus to rock one of the bent levers 34, 36 upon a constantly spring-urged rotating member 30; the levers are controlled by a peripheral spiral spring 37. The result of this action is to project a corresponding pin from the right face of the rotating member, which will move through an angle thus determined as soon as the return movement of a key operates a rock-shaft 54, Fig. 8, and allows an escape-wheel upon a shaft 62 to turn through a quarter of a revolution and displace a pinion upon the same shaft 62, which is arresting the previously projected pin. The rock-shaft 54 is operated by a universal bar from the key-levers. From the spring-driven member 30, movement is conveyed by the shaft 41 and bevel-gearing shown to the horizontal spindle 35, which rotates within a supporting-tube and carries the two master-actuating teeth 70. A protruded spring is finally re-set by the fixed projection 66. (3) Above this spindle 35, the several totalizing-counters 90 are mounted with displaceable connexions to the paper carriage, so that they may either move laterally therewith or may be adjusted by hand. Each numeral-wheel 76 is geared through an idle-wheel with its receiving-wheel 72, which is toothed both internally to engage the master-actuating teeth and externally for the purpose of driving the numeral-wheel and transfer mechanism. (4) The transfer parts are set by the single tooth 85 upon the lower wheel, which moves the transfer pinion 86 through a

© B O B Williams Printed22/11/2023 CalcPatents Ed. 1.doc

Wright W 8740/1909 Adder for type writer

8740. Wright, W. April 20, 1908, [*Convention date*].

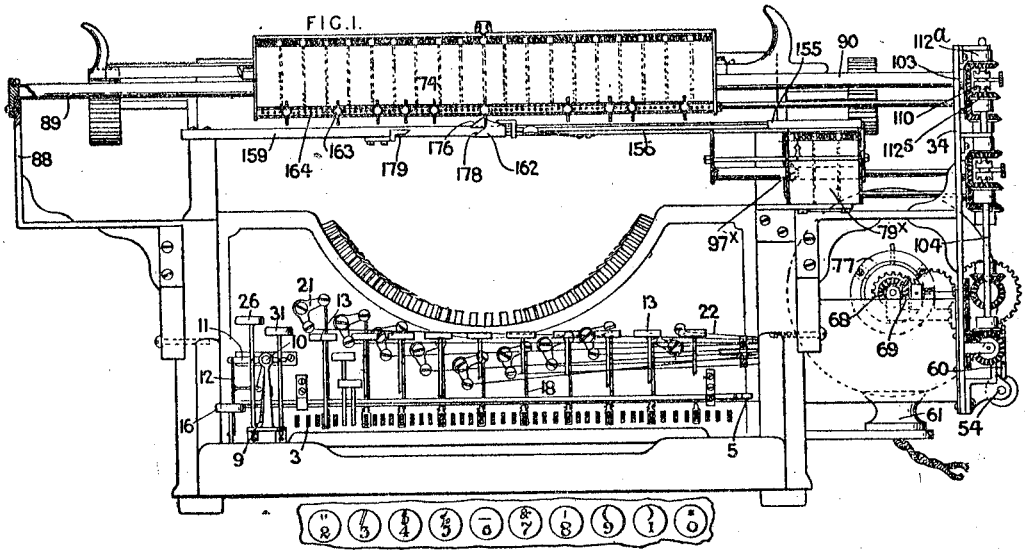

Adding and subtracting apparatus ; attachments to typewriters.—In a motor-driven adding and subtracting attachment to a typewriter, of the type described in Specification 6647/08, provision is made for computing both vertical columns and horizontal or cross totals in a number of columns, for varying the width of the several columns, and for disabling and disconnecting the computing-mechanism from the typewriter. A front and side elevation of the apparatus attached to an Underwood typewriter is shown in Figs. 1 and 19 respectively. The main computing-mechanism is movable with the paper carriage of the typewriter, and the secondary computing-mechanism is stationary; the master actuating-wheels are operated through gearing from the motor and are rotated at each actuation by an amount depending on the particular key depressed.

Varying functions of machine.—The numeral keys 13 are connected to, and disconnected from, the computing-mechanism by the movement of a slide-bar 5, which has a notch 8, Fig. 5, at one end, into

Wynne G F 10617/1893 Photo exposure

10,617. Wynne, G. F. May 30.

Calculating-apparatus.—Relates to an instrument for calculating the time of a photographic exposure, when the actinic value of the light, the focal value of the diaphragm, the speed of the plate, and the character of the subject are known. In the instrument shown, Figs. 1 and 2, this is done by the use of two scales only, arranged concentrically. One of these scales is on the glass lid F, and the other on the box J. The lid F is made so that it can be turned round on the box J by a milled head *j*. Combined with the instrument is an actinometer, consisting of a disc *a* of standard tint having a slit B, under which a strip of sensitive paper C can be drawn and exposed till the tint agrees with the standard. The numbers on the outer scale express the ratios of focal lengths to diameters of diaphragm, and also indicate the speed of the plates in terms of the focal value of the diaphragm, which will give the correct exposure in the actinometer time. The numbers on the inner scale indicate the actinometer time and also the exposure to be calculated for the given case. To calculate an exposure, turn the movable scale of the instrument until the actinometer time in seconds upon the exposure scale is opposite the diaphragm number of the plate. Then the correct exposure in seconds and fractions of a second will be found simultaneously against each stop. Allowance may be made for the character of the subject by displacing the movable scale one or two degrees to right or left.

FIG. 1.

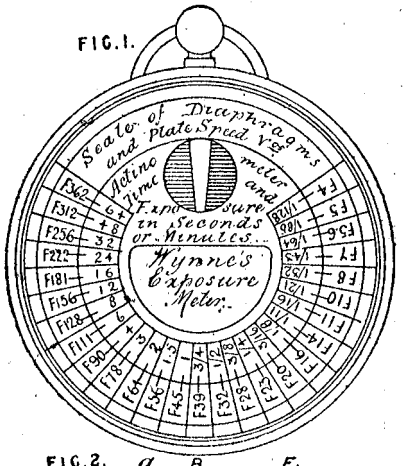

FIG. 2.

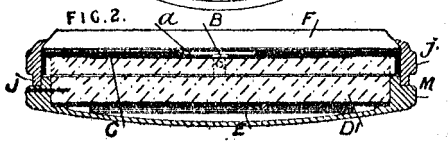

In the section of the instrument, Fig. 2, several discs E of sensitive paper for the actinometer are stored in the bottom of the case; the disc in use C being supported by a disc of elastic material D^1, such as felt, by which also it is turned when the lowest part M of the case is turned. Modified forms of the instrument are made with straight scales like the ordinary slide rule; in one of these an additional scale of speed of the plates is given, these being proportional to the squares of the diaphragm numbers.

© B O B Williams Printed22/11/2023 CalcPatents Ed. 1.doc

Yates J 12959/1888 Adder

12,959. Yates, J. Sept. 7.

Calculating-apparatus.—Relates to adding-apparatus consisting of a set of concentric circular rings, shown black, which are fitted in circular grooves in a board A. The ridges separating the grooves are marked with numbers; those shown represent in order outwards farthings, pence, shillings, and pounds. The black rings are marked at the back with the same sets of numbers. In front they carry metal rings D, D^1, D^2, D^3, with radial pointers E, E^1, E^2, E^3 and studs F, F^1, F^2, F^3 corresponding to the numbers. The board A has apertures through which the numbers at the back of the rings can be seen. The instrument is used by bringing the studs opposite the digits to be added round to a bridge H which spans the rings. The motion is transferred from the inner rings to the outer ones by pawls J, J^1, J^2, which are put into engagement with the pointers E by levers L, L^1, L^2 engaging studs I, I^1, I^2 beneath the bridge H.

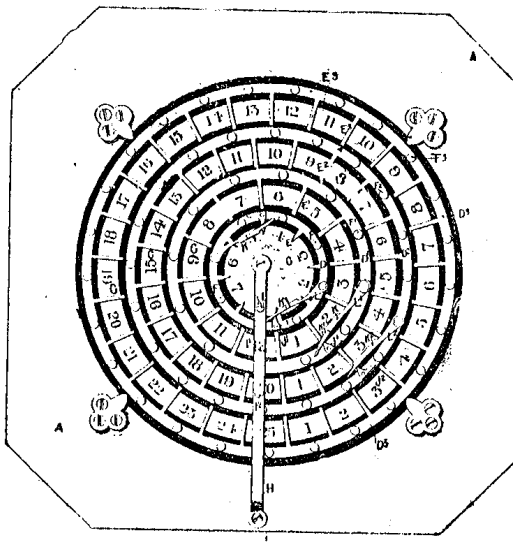

Yokota S 18218/1907 Slide rule

18,218. Yokota, S. Aug.

A FIG.1.

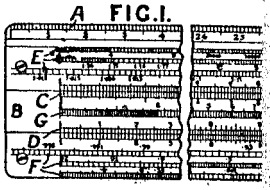

Slide rules.—Upon the stationa rule there are scales of distance i of logarithms of numbers greate and less than unity, F, each a rows, and of logarithms of num respectively upon the edges ad scales D, C on the slide. Centr the slide is a scale of the logari and upon the reverse thereof are l of sines, secants, and tangents. T constructed to a standard length there is accordingly added, on on faces of the stationary portion, a inches in extent, against which moved so as to facilitate the logarithms by inspection.

Reprinted from "The Engineer," 4th Feb., 1910, page 118.

A New Slide Rule.

Much ingenuity has been from time to time devoted to the construction of slide rules and other mechanical calculators, and in the past we have illustrated and described numerous inventions of this class. Where a formula or particular calculation is of frequent occurrence, there would appear to be a tendency to devise an instrument solely adapted for the work; indeed, there are few mathematical problems, whether in simple arithmetic or the calculus, which cannot be solved by mechanical means. Such instruments naturally possess limitations, and in many cases they have but small interest to those outside the class for whose benefit they are designed. The slide rule herewith illustrated can perform many of the duties required of the specialised instrument, yet it has all the qualities of the ordinary rule, and retains its general applicability. This device, known as the Yokota slide rule, is manufactured by John Davis and Son (Derby), Limited, and resembles the more familiar rule associated with the firm's name.

Dr. Yokota's Slide Rule.

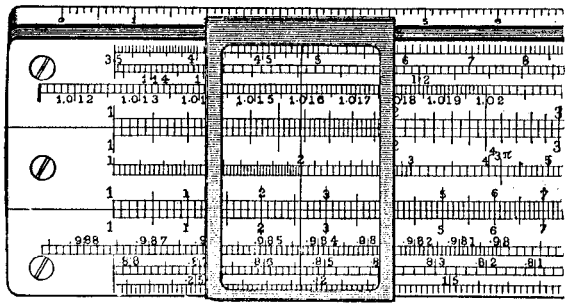

PATENT 1821807

As adopted at the Royal Naval College, Greenwich; Tokio University, and elsewhere.

We are Sole Licensees under the British Patent.

Special Features.

In addition to the four customary scales of the ordinary rule, seven additional scales are given, three lying on the top strip, three on the lower, and one on the moving slide. The three upper scales are engraved proportionally to the logarithms of the logarithms of the numbers enabling involution and evolution to be carried out on any number to any positive integral or fractional degree. The three lower scales are complementary to these, and enable the same processes to be effected with negative indices.

The sixth scale is provided to enable the 3rd, $\frac{2}{3}$rd, and $\frac{3}{2}$th powers of any number to be read off directly.

The scales are 10 inches in length instead of the usual 25cms.

This permits a direct method of reading the logarithms of numbers to be employed by using a tongue on the cursor in conjunction with the decimally divided ten-inch scale on the edge.

Cable Word "Yokota" 10in. Slide Rule (measuring 11in. over all), with Cursor, Case, and full instructions, **£1 1 0**; *postage* **3d.**

Spare Cursor, **3/-**; *postage,* **1d.**

© B O B Williams Printed22/11/2023 CalcPatents Ed. 1.doc

Young H 16237/1913 Circ slide rule for horsepower

16,237. Young, H. July 15.

FIG. 1.

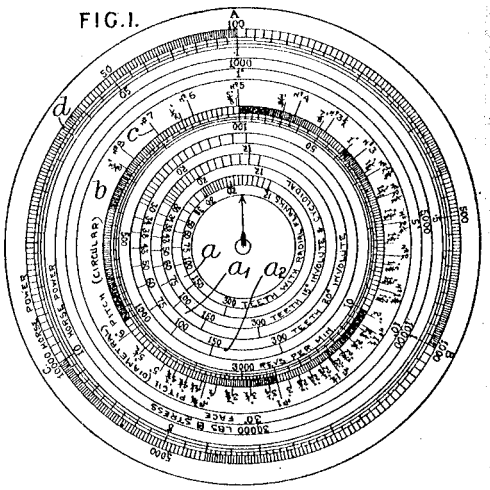

FIG 3.

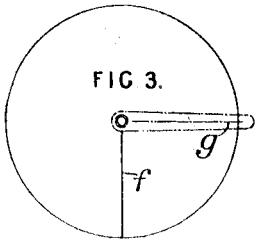

Slide-rules.—In circular logarithmic rules, the scales are marked in clockwise and counter-clockwise directions on the base-plate and the calculations are made by the aid of a transparent disk and pointer which are secured centrally to the plate by an eyelet so as to be independently or simultaneously rotatable and are engraved with index lines *f*, *g*, respectively. The method of applying the instrument to calculations, according to a given formula, of the horsepower transmissible by toothed gearing is described, the scales *a*, a_1, a_2 and *b* for the number of teeth and for the revolutions per minute being set out counterclockwise and the scales *c*, *d* for the pitch of the teeth and the length of the face, stress, and horsepower clockwise. The position of the decimal point in the result is ascertained by noticing the number of times the index line on the disk passes the letters A, B, C on the base-plate. Instead of the eyelet connexion, the transparent disk may be guided by a case of watch form.

Young J H 17153/1889 Slide rule Timber, earthwork etc.

17,153. Young, J. H. Oct. 30.

Slide-rules for calculations relating to timber, or to earthwork, masonry, ironwork, &c. The instrument consists of a frame G and two slides H, H¹, bearing six scales A, B, C, D, E, F, representing in order, A thickness in inches, B width in inches, C length in feet, D divisors for cubic feet, round and square, or for standards of timber, E values per foot or standard, and F cubic feet or prices per

FIG.1.

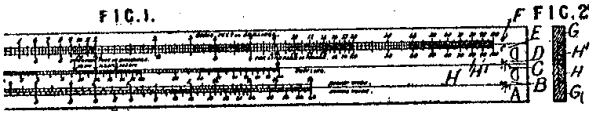

FIG.2

cubic foot. Given any four of these factors, a fifth and sixth are found by moving the slides so as to juxtapose known factors.

Poly slide rule See [15]

Yule G U 14928/1894 Harmonic analyser

18. Yule, G. U. Aug. 3.

culating apparatus.—Relates to an harmonic analyser. Let O P Q be the curve representing the ier expansion—

$$y = a_0 + a_1 \sin x + a_2 \sin 2x + \ldots + b_1 \cos x + b_2 \cos 2x + \ldots$$

$$\text{where } a_n = \frac{1}{\pi}\int_0^{2\pi} y \sin n x \, dx, \; b_n = \frac{1}{\pi}\int_0^{2\pi} y \cos n x \, dx.$$

e Figure, the curve is shown broken away to save space.) The object of the present invention determine the coefficients $a_1, a_2, \ldots b_1, b_2 \ldots$. For this purpose a parallel ruler is used, with L, L¹ along its front edge engaging with one of a series of toothed discs D. The centres of the are cut away and a glass plate d, with cross lines at right angles, let in. The peripheries of the

155

discs are respectively equal to O P, ½ O P, ⅓ O P, &c. Two depressions A, A¹ are made in the face of the discs in the continuation of the cross lines and at a distance r from the centre. Suppose that

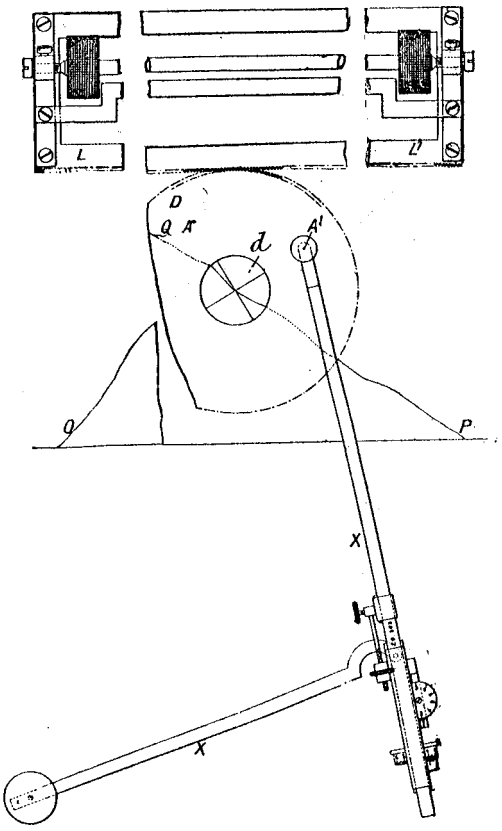

the nth disc is placed with its centre over O, and the diameters containing A and A¹ respectively parallel and perpendicular to O P, then by placing the tracer of a planimeter X in the depression A (or A¹) and running the centre of D over the curve O Q P, a curve will be described whose area is that of O Q P $\pm n\ r\ \pi\ a_n$ (or O Q P $\pm n\ r\ \pi\ b_n$). The area O Q P is determined by the planimeter in order to obtain the value of a_0. It is convenient to make r a multiple of $\frac{1}{\pi}$.

Zarth J H A 4789/1879 Fraction calculator

4789. Zarth, J. H. A. Nov. 24.

[*Provisional protection only.*]

Calculating - apparatus.—Consisting of a square frame placed in an upright position and having on the face of the two upright sides a number of brackets upon which rods (each marked with different numbers of equal parts) are placed so that they cross the frame horizontally. The rods may have several equal sides each marked with different divisions. Upon the top bar of the frame a slide is fitted having a vertical rod projecting downwards across all the rods. By moving this rod to any division of one bar it will at once point to the number of corresponding value on each other bar. A number of markers are provided that can be slid or hooked on to the bars to mark any particular fraction. Hooks are fitted on the opposite side of the frame from which cords are stretched vertically and horizontally, thus dividing the area into a number of squares for measuring areas. A slate or blackboard may be placed above the frame. Small rods of polygonal or octagonal section having each side divided may be used to facilitate computation.

Abridged also in Class *Writing-instruments &c.*

Zenith Fabrique des Montres 134133 of 1918 Watch type slide rule

m, through a lever r, into gear with the wheel i to rotate the rear index plate d, while the movement of a second push t through levers u, v moves

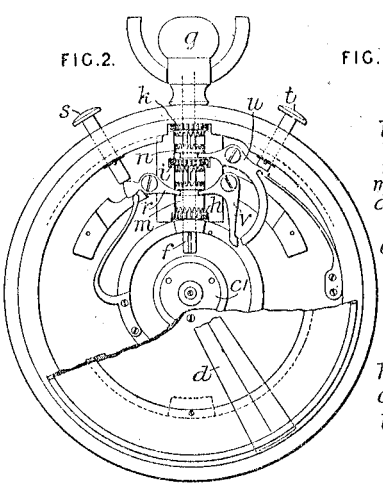

the clutch n into gear with the wheel k and the clutch m to an inoperative position.

134,833. Fabriques des Montres Zénith, (*Successors to* Fabriques des Montres Zénith G. Favre-Jacot et Cie). Nov. 5, 1918, [*Convention date*].

Slide-rules.—Circular rules of the keyless-watch type are provided with fixed and rotatable scales on both faces and with rotatable index lines therefor carried by thin celluloid &c. plates. Clutch pieces mounted on a central rotatable shaft are brought into operation by the depression of exterior push pieces. Secured to the frame e are the exterior fixed scales b, and revolving in the frame is a pivot c^1 carrying the interior movable scales c. The transparent index plates d are carried by rings o, p mounted on the dials b. Loose on a central shaft f, rotated by a milled head g, are pinions h, i, k engaging teeth h^1, i^1, k^1 carried by the front scale c and the rings o, p. Feathered on the shaft are clutch pieces m, n, the first of which is normally in gear with the teeth h^1. Depression of a push s brings the clutch

1

ng Apparatus – Indexes to Abridged Patent
Slide Rule Circle, 2002.

[2] P. M. Hopp, *Slide Rules, Their History, Models and Makers*. Mendham, N.J., USA: Astragal Press, 1999.

[3] S. Van Dulken, *British Patents of Invention, 1617-1977*. London: British Library, 1999.

[4] J. V. Knott, "UK Patent System and Selected Slide Rule Patents", in *Slide Rule & Calculation Monographs*, Vol.1. England: Barnes/UK Slide Rule Circle, 2002.

[5] J. Hewish, *Rooms near Chancery Lane, The Patent Office 1852-1833*: The British Library, 2000.

[6] P. M. Hopp, "The Substance of the UK Patent System, 1600-1854", *Slide Rule Gazette*, Issue No. 3, 2002.

[7] IJ. Schuitema, *The Slide Rule, Technical Cultural Heritage*: Amsterdam, The Netherlands: Author, 2003.

[8] E. Martin, *Die Rechenmaschinen und Ihre Entwicklungsgeschichte*, Calculating machines: Their History and Development, Cambridge, Mass. USA: MIT Press 1992ed. 1924.

[9] E. M. Horsburgh, *Handbook of the Napier Tercentenary Celebration*, Reprint 1982ed. Edinburgh: G. Bell & Sons, 1914.

[10] J. W. Cortada, *Before the Computer IBM et al 1865-1956*, Paperback 2000ed. Princeton, N.J. USA: Princeton UP, 1993.

[11] H. W. Dickinson, Samuel Morland Diplomat and Inventor 1625-1695. Cambridge, England: Heffer for Newcomen Society, 1970.

[12] D. Baxendall and J. Pugh. *Calculating Machines and Instruments*. London: Science Museum, 1975.

[13] P. A. Kidwell, "Planimeter", in *Instruments of Science*, B. Warner, Ed: Garland, New York, 1998.

[14] J. Marguin, *Histoire des instruments et machines a calculer*: Hermann, Paris, 1994.
[15] G. Clifton, Directory of British Scientific Instrument Makers: Zwemmer, London, 1995.
[16] B. O. B. Williams, "Poly-slide Rules", paper presented at the 8th International Meeting of Slide Rule Collectors, Leamington Spa, England, 2002.
[17] P. M. Hopp, "Boucher calculators (continued)", *Slide Rule Gazette*, Issue No. 4, 2003.
[18] R. K. Otnes, "Charpentier Calculator", *Journal of the Oughtred Society*, Vol. 0, No. 0, 1991.
[19] J. V. Knott, "Fowler & Co.", *Journal of the Oughtred Society*, Vol. 4, No. 2, 1995.
[20] P. Kidwell, "Adding Machines of Chicago 1884-1930", *Annals of the History of Computing*, 2001.
[21] C. Barnes, "Circular Calculators of Fearns & Mear", *Slide Rule Gazette*, Issue No. 2, 2001.
[22] B. O. B. Williams, "Ready Reckoners and Tabular Calculators", paper presented at the 9th International Meeting of Slide Rule Collectors, Amsterdam/Breukelen, Holland, 2003.
[23] C. Barnes, *Otis King Calculators – a History of Production*, Fordham, Ely Cambs., UK: Colin Barnes, 1999.
[24] Andrewes, "The Quest for Longitude", paper presented at The Longitude Symposium, Cambridge, Mass., USA.
[25] C. Barnes, "Lords Calculator", *Slide Rule Gazette*, Issue No. 1, 2000.
[26] C. Schure, "The Robinson Calculator", *Journal of the Oughtred Society*, Vol. 9, No. 1, 2000.
[27] D. von Jezierski, "System Cuntz, an Outstanding Slide Rule", *Slide Rule Gazette*, Issue No. 4, 2003.
[28] M. Lindgren, *Glory and Failure, Georg & Edvard Scheutz*: MIT Press, Cambridge, Mass. USA, 1990.
[29] J. V. Knott, "Sheppards' Improvements in Slide Rules", *Slide Rule Gazette*, Issue No. 2, 2001.
[30] S. Johnston, "Making the Arithmometer Work", *Journal of the Scientific Instrument Society*, Vol. 52, 1997.
[31] J. A. V. Turck, *Origin of Modern Calculating Machines*, Chicago: Western Society of Engineers, "The Gemmary" reprint, 1921.
[32] P. A. Kidwell, "The Webb Adder", *Rittenhouse*, Vol. 1.
[33] P. M. Hopp, "Mystery Pocket-Watch Calculators", *Journal of the Oughtred Society*, Vol. 9, No. 1, 2000.

Using the Chronological List
Notes on definitions and terminology

The Columns are:

Number in this list - Only in Excel
Yr Year must be quoted to order a Patent before 1919

Note in referring to abridgments before 1918 I use a slash between the number and the year *1248/1898*

After about 1915, I writ*e number* **of** ***year*** **of yyy**

More on dates the Excel Tables show D/M/Y. This can be confusing, as it is often the date of application in GB **or overseas**. The year Y can therefore differ from the year used for GB numbering reference year. In many, but not all cases, the GB application year is the same as the Grant year, see the references on GB patent system.

Patentee/Inventor - May be the inventor or the company, sometimes called the applicant.
Country - Country of residence of the Patentee/Company. Many GB patents show nationality, but I have **not** entered this.

Pat# - Patent number.
Copied - This shows what has been copied into the Word document.

Abr Txt – Text reproduced from abridgment.

abrd - Drawing reproduced from abridgment.
Chron - Text from the *Chronological List of Titles Chronologically arranged 1617-1852, see above.*

Ref - Reference to article is cited in the CD.
Full Txt or Full d - reproduced in CD version, before 1850 when abridgments started.

Patent # - Patent number. Must be cited with the Year.
These start again on 1st January every year until 1916.

Descr - Description, very brief.
Made - 1 indicates that patent was exploited (Only in the Excel version).

US Pat/Yr - US Pat number and year, not needed for citing. Only in Excel version.

Class - As defined above, only in Excel.
Area - As defined above, only in Excel.